AMENDMENT OF SOLICITATION/MODIFICATION OF CONTRACT	1. CONTRACT ID CODE	PAGE 1 OF PAGES 2

2. AMENDMENT/MODIFICATION NO.	3. EFFECTIVE DATE	4. REQUISITION/PURCHASE REQ. NO.	5. PROJECT NO. *(If applicable)*
0001	05/04/00		

6. ISSUED BY CODE

US ARMY ENGINEER DISTRICT, HONOLULU
CORPS OF ENGINEERS, BUILDING S-200
FORT SHAFTER, HAWAII 96858-5440
CONTRACT SPECIALIST: JODY MURAOKA

7. ADMINISTERED BY *(If other than Item 6)* CODE

8. NAME AND ADDRESS OF CONTRACTOR *(No., street, county, State and ZIP Code)*

CODE | FACILITY CODE

(X) 9A. AMENDMENT OF SOLICITATION NO.

X DACA83-00-R-0010

9B. DATED *(SEE ITEM 11)* 04/20/00

10A. MODIFICATION OF CONTRACT/ORDER NO.

10B. DATED *(SEE ITEM 13)*

11. THIS ITEM ONLY APPLIES TO AMENDMENTS OF SOLICITATIONS

☒ The above numbered solicitation is amended as set forth in Item 14. The hour and date specified for receipt of Offers ☐ is extended, ☒ is not extended.

Offer must acknowledge receipt of this amendment prior to the hour and date specified in the solicitation or as amended, by one of the following methods:

(a) By completing Items 8 and 15, and returning _____ copies of the amendment; (b) By acknowledging receipt of this amendment on each copy of the offer submitted; or (c) By separate letter or telegram which includes a reference to the solicitation and amendment numbers. FAILURE OF YOUR ACKNOWLEDGEMENT TO BE RECEIVED AT THE PLACE DESIGNATED FOR THE RECEIPT OF OFFERS PRIOR TO THE HOUR AND DATE SPECIFIED MAY RESULT IN REJECTION OF YOUR OFFER. If by virtue of this amendment you desire to change an offer already submitted, such change may be made by telegram or letter, provided each telegram or letter makes reference to the solicitation and this amendment, and is received prior to the opening hour and date specified.

12. Accounting and Appropriation Data *(If required)*

13. THIS ITEM APPLIES ONLY TO MODIFICATIONS OF CONTRACTS/ORDERS, IT MODIFIES THE CONTRACT/ORDER NO. AS DESCRIBED IN ITEM 14.

(X) A. THIS CHANGE ORDER IS ISSUED PURSUANT TO: *(Specify authority)* THE CHANGES SET FORTH IN ITEM 14 ARE MADE IN THE CONTRACT ORDER NO. IN ITEM 10A.

B. THE ABOVE NUMBERED CONTRACT/ORDER IS MODIFIED TO REFLECT THE ADMINISTRATIVE CHANGES *(such as changes in paying office, appropriation date, etc).* SET FORTH IN ITEM 14, PURSUANT TO THE AUTHORITY OF FAR 43.103(b).

C. THIS SUPPLEMENTAL AGREEMENT IS ENTERED INTO PURSUANT TO AUTHORITY OF:

D. OTHER *(Specify type of modification and authority)*

E. IMPORTANT: Contractor ☐ is not, ☐ is required to sign this document and return _____ copies to the issuing office.

14. DESCRIPTION OF AMENDMENT/MODIFICATION *(Organized by UCF section headings, including solicitation/contract subject matter where feasible.)*

FY00 Indefinite Delivery Indefinite Quantity (IDIQ) Contract for Services and Construction with Time & Materials (T&M) Capability, Medical (MEDCOM) Facilities, Honolulu Engineer District Area of Responsibility (AOR)

(See Pages 2 & 3 of 3 Pages)

Except as provided herein, all terms and conditions of the document referenced in Item 9A or 10A, as heretofore changed, remains unchanged and in full force and effect.

15A. NAME AND TITLE OF SIGNER *(Type or print)*		16A. NAME AND TITLE OF SIGNER *(Type or print)*	
15B. CONTRACTOR/OFFEROR *(Signature of person authorized to sign)*	15C. DATE SIGNED	16B. UNITED STATES OF AMERICA BY *(Signature of Contracting Officer)*	16C. DATE SIGNED

1. CHANGES TO THE SOLICITATION. Attached hereto are new and revised pages to the solicitation. The revision mark "(Am-0001)" is shown on each new and revised page.

a. REVISED PROVISIONS/CLAUSES/PAGES. Following are revised pages to the solicitation. Changes are indicated in **bold** print. Although the entire sections are being re-issued under Am-0001, only the following CLINS/pages/provisions/clauses changed in these sections.

Section 00010

CLIN 0127
Note 4, Page 00010-13
Note 9c, Page 00010-14

Section 00100

Section 00100, Page 9, S-28.3, Penal Sum and Form of Offer Guarantee

Section 00210

6.1.1.1 Sub-Subfactor I - Experience

Section 00700

Clause 52.232-7, Payments under Time-and-Materials and Labor-Hour Contracts (MARCH 2000)

b. NEW PROVISIONS/CLAUSES PAGES. The following pages are added to the solicitation. Although the entire sections are being re-issued under Am-0001, only the following items are new.

Section 00800

Paragraph S-28.10, Performance and Payment Bonds for Task Orders Exceeding $100,000 (Apr 2000)
Paragraph S-28.11, Payment Bonds for Task Orders Below $100,000 (Apr 2000)

Section 00740

Pages 00740-i, 00740-1 through 3 and Attachments 1 & 2

Excel Spreadsheet of the Proposal Schedule, Section 00010, Pages 00010-3 through 00010-9

c. DELETED PROVISIONS/CLAUSES/PAGES. The following items are deleted from the solicitation.

Section 00010

CLIN 0126

Section 00700

Clause 52.219-3, Notice of Total Hubzone Set-Aside (Jan 1999)

Section 00800

Paragraph S-28.8, Performance and Payment Bonds (Oct 1995)
Page 0800-15, Paragraph S-25, Award of Task Orders under Multiple Award Contracts (THIS IS A DUPLICATE PROVISION, THE SAME PROVISION ON PAGE 00800-7 IS STILL IN EFFECT.)

Section 00740

Pages 00740-i, 00740-1 through 4 and Attachments 1 through 3

d. TECHNICAL SPECIFICATIONS PAGES.

(1) NEW PAGES. The following pages are added to the solicitaiton.

Project Table of Contents Page 1
Section 01010, Pages 01010-1 through 01010-7

(2) DELETED PAGES. The following page is deleted from the solicitation.

Page 01010-1

2. The proposal closing date of MAY 22, 2000, 2:00 P.M., Hawaiian Standard Time, remains unchanged.

DACA83-00-R-0010
PROPOSAL SCHEDULE
BASE YEAR

CLIN	Description	FFP Estimated Quantity (A)	T&M Estimated Quantity (B)	Unit	Wage Rate (C)	FFP Markup (w/o Profit) (D)	T&M Markup (w/ Profit) (E)	FFP Unit Price (F)=(C+D)	T&M Unit Price (G)=(C+E)	FFP Extended Amount (H)=(A x F)	T&M Extended Amount (I)=(B x G)
	LABOR CATEGORIES: Provide services in support of the IDIQ Construction/Services Contract, STATE OF HAWAII										
	PROFESSIONAL CATEGORIES										
0001	PROFESSIONAL LEVEL 1:	2,400	120	HR	$ -	$ -	$ -	$ -	$ -	$ -	$ -
0002	PROFESSIONAL LEVEL 2:	2,400	120	HR	$ -	$ -	$ -	$ -	$ -	$ -	$ -
0003	PROFESSIONAL LEVEL 3:	2,400	120	HR	$ -	$ -	$ -	$ -	$ -	$ -	$ -
0004	PROFESSIONAL LEVEL 4:	1,200	60	HR	$ -	$ -	$ -	$ -	$ -	$ -	$ -
0005	PROFESSIONAL LEVEL 5:	480	24	HR	$ -	$ -	$ -	$ -	$ -	$ -	$ -

DACA83-00-R0010
PROPOSAL SCHEDULE
BASE YEAR

CLIN	Description	FFP Estimated Quantity (A)	T&M Estimated Quantity (B)	Unit	Wage Rate (C)	Fringe Benefits (D)	Labor Burden (E)	FFP Markup (w/o Profit) (F)	T&M Markup (w/ Profit) (G)	FFP Unit Price (H)=(C+D+E+F)	T&M Unit Price (I)=(C+D+E+G)	FFP Extended Amount (J)=(A x H)	T&M Extended Amount (K)=(B x I)
	CONSTRUCTION CATEGORIES												
0006	ASBESTOS WORKERS/INSULATORS	240	12	HR	$	$	$ -	$ -	$ -	$ -	$ -	$ -	$ -
0007	BOILERMAKERS	320	16	HR	$ -	$ -	$ -	$ -	$ -	$ -	$ -	$ -	$ -
0008	BRICKLAYERS	800	40	HR	$ -	$ -	$ -	$ -	$ -	$ -	$ -	$ -	$ -
	TERRAZZO WORKERS												
0009	Terrazzo Workers	240	12	HR	$ -	$ -	$ -	$ -	$ -	$ -	$ -	$ -	$ -
0010	Terrazzo Base Grinders	240	12	HR	$ -	$ -	$ -	$ -	$ -	$ -	$ -	$ -	$ -
0011	Terrazzo Floor Grinders & Tenders	240	24	HR	$ -	$ -	$ -	$ -	$ -	$ -	$ -	$ -	$ -
0012	MARBLE MASONS	120	8	HR	$ -	$ -	$ -	$ -	$ -	$ -	$ -	$ -	$ -
0013	TILE LAYERS (CERAMIC)	120	8	HR	$ -	$ -	$ -	$ -	$ -	$ -	$ -	$ -	$ -
0014	TILE LAYERS FINISHERS (CERAMIC)	120	8	HR	$ -	$ -	$ -	$ -	$ -	$ -	$ -	$ -	$ -
0015	CARPENTERS	1600	80	HR	$ -	$ -	$ -	$ -	$ -	$ -	$ -	$ -	$ -
0016	Millwrights	80	8	HR	$ -	$ -	$ -	$ -	$ -	$ -	$ -	$ -	$ -
0017	Power Saw Operators (2 HP & over)	80	8	HR	$ -	$ -	$ -	$ -	$ -	$ -	$ -	$ -	$ -
0018	DRYWALL HANGERS	1200	60	HR	$ -	$ -	$ -	$ -	$ -	$ -	$ -	$ -	$ -
0019	LATHERS	80	8	HR	$ -	$ -	$ -	$ -	$ -	$ -	$ -	$ -	$ -
	ELECTRICIANS:												
0020	Electricians	1600	80	HR	$ -	$ -	$ -	$ -	$ -	$ -	$ -	$ -	$ -
0021	Technicians	400	20	HR	$ -	$ -	$ -	$ -	$ -	$ -	$ -	$ -	$ -
0022	Cable Splicers	400	20	HR	$ -	$ -	$ -	$ -	$ -	$ -	$ -	$ -	$ -
0023	Linemen	80	8	HR	$ -	$ -	$ -	$ -	$ -	$ -	$ -	$ -	$ -
0024	Heavy Equipment Operators	120	8	HR	$ -	$ -	$ -	$ -	$ -	$ -	$ -	$ -	$ -
0025	Groundmen; Truck Drivers	80	8	HR	$ -	$ -	$ -	$ -	$ -	$ -	$ -	$ -	$ -
0026	ELEVATOR MECHANICS	80	8	HR	$ -	$ -	$ -	$ -	$ -	$ -	$ -	$ -	$ -

DACA83-00-R0010
PROPOSAL SCHEDULE
BASE YEAR

CLIN	Description	FFP Estimated Quantity (A)	T&M Estimated Quantity (B)	Unit	Wage Rate (C)	Fringe Benefits (D)	Labor Burden (E)	FFP Markup (w/o Profit) (F)	T&M Markup (w/ Profit) (G)	FFP Unit Price (H)=(C+D+E+F)	T&M Unit Price (I)=(C+D+E+G)	FFP Extended Amount (J)=(A x H)	T&M Extended Amount (K)=(B x I)
	ASPHALT PAVING:												
0027	Asphalt Raker	80	8	HR	$ -	$ -	$ -	$ -	$ -	$ -	$ -	$ -	$ -
0028	Asphalt Spreader Operator	80	8	HR	$ -	$ -	$ -	$ -	$ -	$ -	$ -	$ -	$ -
0029	Roller Operator (Over 5 tons)	80	8	HR	$ -	$ -	$ -	$ -	$ -	$ -	$ -	$ -	$ -
0030	Roller Operator (5 tons & under)	80	8	HR	$ -	$ -	$ -	$ -	$ -	$ -	$ -	$ -	$ -
0031	Screedperson	80	8	HR	$ -	$ -	$ -	$ -	$ -	$ -	$ -	$ -	$ -
0032	Hand Roller	80	8	HR	$ -	$ -	$ -	$ -	$ -	$ -	$ -	$ -	$ -
	POWER EQUIPMENT OPERATORS:												
0033	Group 1	40	8	HR	$ -	$ -	$ -	$ -	$ -	$ -	$ -	$ -	$ -
0034	Group 2	80	8	HR	$ -	$ -	$ -	$ -	$ -	$ -	$ -	$ -	$ -
0035	Group 3	40	8	HR	$ -	$ -	$ -	$ -	$ -	$ -	$ -	$ -	$ -
0036	Group 4	80	8	HR	$ -	$ -	$ -	$ -	$ -	$ -	$ -	$ -	$ -
0037	Group 5	40	8	HR	$ -	$ -	$ -	$ -	$ -	$ -	$ -	$ -	$ -
0038	Group 6	80	8	HR	$ -	$ -	$ -	$ -	$ -	$ -	$ -	$ -	$ -
0039	Group 7	40	8	HR	$ -	$ -	$ -	$ -	$ -	$ -	$ -	$ -	$ -
0040	Group 8	40	8	HR	$ -	$ -	$ -	$ -	$ -	$ -	$ -	$ -	$ -
0041	Group 9	40	8	HR	$ -	$ -	$ -	$ -	$ -	$ -	$ -	$ -	$ -
0042	Group 9A	40	8	HR	$ -	$ -	$ -	$ -	$ -	$ -	$ -	$ -	$ -
0043	Group 10	40	8	HR	$ -	$ -	$ -	$ -	$ -	$ -	$ -	$ -	$ -
0044	Group 10A	40	8	HR	$ -	$ -	$ -	$ -	$ -	$ -	$ -	$ -	$ -
0045	Group 11	40	8	HR	$ -	$ -	$ -	$ -	$ -	$ -	$ -	$ -	$ -
0046	Group 12	40	8	HR	$ -	$ -	$ -	$ -	$ -	$ -	$ -	$ -	$ -
0047	Group 12A	40	8	HR	$ -	$ -	$ -	$ -	$ -	$ -	$ -	$ -	$ -
	TRUCK DRIVERS:												
0048	Group 1	80	8	HR	$ -	$ -	$ -	$ -	$ -	$ -	$ -	$ -	$ -
0049	Group 2	80	8	HR	$ -	$ -	$ -	$ -	$ -	$ -	$ -	$ -	$ -
0050	Group 3	40	8	HR	$ -	$ -	$ -	$ -	$ -	$ -	$ -	$ -	$ -
0051	Group 4	40	8	HR	$ -	$ -	$ -	$ -	$ -	$ -	$ -	$ -	$ -
0052	Group 5	40	8	HR	$ -	$ -	$ -	$ -	$ -	$ -	$ -	$ -	$ -
0053	Group 6	40	8	HR	$ -	$ -	$ -	$ -	$ -	$ -	$ -	$ -	$ -
0054	IRONWORKERS	240	12	HR	$ -	$ -	$ -	$ -	$ -	$ -	$ -	$ -	$ -

DACA83-00-R0010
PROPOSAL SCHEDULE
BASE YEAR

CLIN	Description	FFP Estimated Quantity (A)	T&M Estimated Quantity (B)	Unit	Wage Rate (C)	Fringe Benefits (D)	Labor Burden (E)	FFP Markup (w/o Profit) (F)	T&M Markup (w/ Profit) (G)	FFP Unit Price (H)=(C+D+E+F)	T&M Unit Price (I)=(C+D+E+G)	FFP Extended Amount (J)=(A x H)	T&M Extended Amount (K)=(B x I)
	LABORERS:												
0055	Group 1	1600	80	HR	$ -	$ -	$ -	$ -	$ -	$ -	$ -	$ -	$ -
0056	Group 2	1600	80	HR	$ -	$ -	$ -	$ -	$ -	$ -	$ -	$ -	$ -
0057	Group 3	40	8	HR	$ -	$ -	$ -	$ -	$ -	$ -	$ -	$ -	$ -
0058	Group 4	40	8	HR	$ -	$ -	$ -	$ -	$ -	$ -	$ -	$ -	$ -
0059	Group 5	40	8	HR	$ -	$ -	$ -	$ -	$ -	$ -	$ -	$ -	$ -
0060	Group 6	80	8	HR	$ -	$ -	$ -	$ -	$ -	$ -	$ -	$ -	$ -
	LANDSCAPE & IRRIGATION LABORERS:												
0061	Group 1	120	8	HR	$ -	$ -	$ -	$ -	$ -	$ -	$ -	$ -	$ -
0062	Group 2	120	8	HR	$ -	$ -	$ -	$ -	$ -	$ -	$ -	$ -	$ -
0063	Group 3	120	8	HR	$ -	$ -	$ -	$ -	$ -	$ -	$ -	$ -	$ -
	PAINTERS:												
0064	Brush	800	40	HR	$ -	$ -	$ -	$ -	$ -	$ -	$ -	$ -	$ -
0065	Sandblaster; Spray	640	32	HR	$ -	$ -	$ -	$ -	$ -	$ -	$ -	$ -	$ -
0066	GLAZIERS	320	16	HR	$ -	$ -	$ -	$ -	$ -	$ -	$ -	$ -	$ -
0067	SOFT FLOOR LAYERS	120	8	HR	$ -	$ -	$ -	$ -	$ -	$ -	$ -	$ -	$ -
0068	TAPERS	120	8	HR	$ -	$ -	$ -	$ -	$ -	$ -	$ -	$ -	$ -
0069	PLASTERERS	120	8	HR	$ -	$ -	$ -	$ -	$ -	$ -	$ -	$ -	$ -
	CEMENT MASONS:												
0070	Cement Masons	1200	60	HR	$ -	$ -	$ -	$ -	$ -	$ -	$ -	$ -	$ -
0071	Trowel Machine Operators	800	40	HR	$ -	$ -	$ -	$ -	$ -	$ -	$ -	$ -	$ -
0072	Mason Tenders	800	40	HR	$ -	$ -	$ -	$ -	$ -	$ -	$ -	$ -	$ -
0073	PLUMBERS, PIPEFITTERS & STEAMFITTERS	800	40	HR	$ -	$ -	$ -	$ -	$ -	$ -	$ -	$ -	$ -
0074	ROOFERS	400	20	HR	$ -	$ -	$ -	$ -	$ -	$ -	$ -	$ -	$ -
0075	SPRINKLER FITTERS	120	8	HR	$ -	$ -	$ -	$ -	$ -	$ -	$ -	$ -	$ -
0076	SHEET METAL WORKERS	400	20	HR	$ -	$ -	$ -	$ -	$ -	$ -	$ -	$ -	$ -
0077	FENCE ERECTORS (Chain Link)	80	8	HR	$ -	$ -	$ -	$ -	$ -	$ -	$ -	$ -	$ -
0078	RIGGERS; WELDERS	80	8	HR	$ -	$ -	$ -	$ -	$ -	$ -	$ -	$ -	$ -

DACA83-00-R0010
PROPOSAL SCHEDULE
BASE YEAR

CLIN	Description	FFP Estimated Quantity (A)	T&M Estimated Quantity (B)	Unit	Wage Rate (C)	Fringe Benefits (D)	Labor Burden (E)	FFP Markup (w/o Profit) (F)	T&M Markup (w/ Profit) (G)	FFP Unit Price (H)=(C+D+E+F)	T&M Unit Price (I)=(C+D+E+G)	FFP Extended Amount (J)=(A x H)	T&M Extended Amount (K)=(B x I)
	SERVICE CATEGORIES												
0079	Carpenter, Maintenance	400	20	HR	$ -	$ -	$ -	$ -	$ -	$ -	$ -	$ -	$ -
0080	Drafter I	40	8	HR	$ -	$ -	$ -	$ -	$ -	$ -	$ -	$ -	$ -
0081	Drafter II	80	8	HR	$ -	$ -	$ -	$ -	$ -	$ -	$ -	$ -	$ -
0082	Drafter III	120	8	HR	$ -	$ -	$ -	$ -	$ -	$ -	$ -	$ -	$ -
0083	Drafter IV	120	8	HR	$ -	$ -	$ -	$ -	$ -	$ -	$ -	$ -	$ -
0084	Electrician, Maintenance	160	8	HR	$ -	$ -	$ -	$ -	$ -	$ -	$ -	$ -	$ -
0085	Electronics Technician, Maintenance I	40	8	HR	$ -	$ -	$ -	$ -	$ -	$ -	$ -	$ -	$ -
0086	Electronics Technician, Maintenance II	40	8	HR	$ -	$ -	$ -	$ -	$ -	$ -	$ -	$ -	$ -
0087	Electronics Technician, Maintenance III	40	8	HR	$ -	$ -	$ -	$ -	$ -	$ -	$ -	$ -	$ -
0088	Engineering Technician I	80	8	HR	$ -	$ -	$ -	$ -	$ -	$ -	$ -	$ -	$ -
0089	Engineering Technician II	120	8	HR	$ -	$ -	$ -	$ -	$ -	$ -	$ -	$ -	$ -
0090	Engineering Technician III	120	8	HR	$ -	$ -	$ -	$ -	$ -	$ -	$ -	$ -	$ -
0091	Engineering Technician IV	80	8	HR	$ -	$ -	$ -	$ -	$ -	$ -	$ -	$ -	$ -
0092	Engineering Technician V	80	8	HR	$ -	$ -	$ -	$ -	$ -	$ -	$ -	$ -	$ -
0093	Engineering Technician VI	80	8	HR	$ -	$ -	$ -	$ -	$ -	$ -	$ -	$ -	$ -
0094	Environmental Technician	120	8	HR	$ -	$ -	$ -	$ -	$ -	$ -	$ -	$ -	$ -
0095	Fire Alarm System Maintenance	120	8	HR	$ -	$ -	$ -	$ -	$ -	$ -	$ -	$ -	$ -
0096	Forklift Operator	40	8	HR	$ -	$ -	$ -	$ -	$ -	$ -	$ -	$ -	$ -
0097	General Clerk I	80	0	HR	$ -	$ -	$ -	$ -	$ -	$ -	$ -	$ -	$ -
0098	General Clerk II	80	0	HR	$ -	$ -	$ -	$ -	$ -	$ -	$ -	$ -	$ -
0099	General Clerk III	80	0	HR	$ -	$ -	$ -	$ -	$ -	$ -	$ -	$ -	$ -
0100	General Clerk IV	80	0	HR	$ -	$ -	$ -	$ -	$ -	$ -	$ -	$ -	$ -
0101	Heat, Refrigeration, & AC Mechanic	800	40	HR	$ -	$ -	$ -	$ -	$ -	$ -	$ -	$ -	$ -
0102	Heavy Equipment Mechanic	80	8	HR	$ -	$ -	$ -	$ -	$ -	$ -	$ -	$ -	$ -
0103	Heavy Equipment Operator	80	8	HR	$ -	$ -	$ -	$ -	$ -	$ -	$ -	$ -	$ -
0104	Laborer	160	8	HR	$ -	$ -	$ -	$ -	$ -	$ -	$ -	$ -	$ -
0105	Painter, Maintenance	160	8	HR	$ -	$ -	$ -	$ -	$ -	$ -	$ -	$ -	$ -
0106	Pipefitter, Maintenance	80	8	HR	$ -	$ -	$ -	$ -	$ -	$ -	$ -	$ -	$ -
0107	Plumber, Maintenance	80	8	HR	$ -	$ -	$ -	$ -	$ -	$ -	$ -	$ -	$ -
0108	Secretary I	40	0	HR	$ -	$ -	$ -	$ -	$ -	$ -	$ -	$ -	$ -
0109	Secretary II	40	0	HR	$ -	$ -	$ -	$ -	$ -	$ -	$ -	$ -	$ -
0110	Secretary III	40	0	HR	$ -	$ -	$ -	$ -	$ -	$ -	$ -	$ -	$ -
0111	Secretary IV	40	0	HR	$ -	$ -	$ -	$ -	$ -	$ -	$ -	$ -	$ -
0112	Sheet Metal Worker, Maintenance	80	8	HR	$ -	$ -	$ -	$ -	$ -	$ -	$ -	$ -	$ -
0113	Survey Party Chief	120	8	HR	$ -	$ -	$ -	$ -	$ -	$ -	$ -	$ -	$ -
0114	Surveying Technician/Rodperson	120	8	HR	$ -	$ -	$ -	$ -	$ -	$ -	$ -	$ -	$ -
0115	Surveying Aide	80	8	HR	$ -	$ -	$ -	$ -	$ -	$ -	$ -	$ -	$ -
0116	Tractor Operator	40	8	HR	$ -	$ -	$ -	$ -	$ -	$ -	$ -	$ -	$ -
0117	Truckdriver, Light Truck	240	12	HR	$ -	$ -	$ -	$ -	$ -	$ -	$ -	$ -	$ -
0118	Truckdriver, Medium Truck	240	12	HR	$ -	$ -	$ -	$ -	$ -	$ -	$ -	$ -	$ -
0119	Truckdriver, Heavy Truck	240	12	HR	$ -	$ -	$ -	$ -	$ -	$ -	$ -	$ -	$ -

DACA83-00-R0010
PROPOSAL SCHEDULE
BASE YEAR

CLIN	Description	FFP Estimated Quantity (A)	T&M Estimated Quantity (B)	Unit	Wage Rate (C)	Fringe Benefits (D)	Labor Burden (E)	FFP Markup (w/o Profit) (F)	T&M Markup (w/ Profit) (G)	FFP Unit Price (H)=(C+D+E+F)	T&M Unit Price (I)=(C+D+E+G)	FFP Extended Amount (J)=(A x H)	T&M Extended Amount (K)=(B x I)
0120	Water Treatment Plant Operator	80	8	HR	$ -	$ -	$ -	$ -	$ -	$ -	$ -	$ -	$ -
0121	Welder, Combination, Maintenance	80	8	HR	$ -	$ -	$ -	$ -	$ -	$ -	$ -	$ -	$ -
	TOTAL BASE YEAR, STATE OF HAWAII (CLINS 0001-0121)											$ -	$ -

CLIN	Description	FFP Estimated Quantity (A)	T&M Estimated Quantity (B)	Unit	Wage Rate (C)	Fringe Benefits (D)	Labor Burden (E)	FFP Markup (w/o Profit) (F)	T&M Markup (w/ Profit) (G)	FFP Unit Price (H)=(C+D+E+F)	T&M Unit Price (I)=(C+D+E+G)	FFP Extended Amount (J)=(A x H)	T&M Extended Amount (K)=(B x I)
0122	OTHER THAN NORMAL WKG HRS (MULTIPLIER FOR DIRECT LABOR)	N/A	N/A	%	N/A	N/A	N/A	N/A	N/A	%	%	N/A	N/A
0123	SUBCONTRACTOR & CONSULTANT (Negotiated/ individual Task Orders)**	**	**	HR	**	**	**	**	**	**	**	N/A	N/A
0124	MATERIAL AND EQUIPMENT (Negotiated/ individual Task Orders)**	**	**	**	N/A	N/A	N/A	N/A	N/A	N/A	N/A	N/A	N/A
0125	Additional mobilization/demobilization, travel & subsistence costs for remote areas within State of Hawaii (e.g., islands other than Oahu) (Negotiated/ individual Task Orders)**	**	**	EA	**	**	**	**	**	**	**	N/A	N/A
~~0126~~	~~Additional mobilization/demobilization, remote Hawaii travel & subsistence costs for remote areas outside of the State of Hawaii (Negotiated/ individual Task Orders)**~~	~~**~~	~~**~~	~~EA~~	~~**~~	~~**~~	~~**~~	~~**~~	~~**~~	~~**~~	~~**~~	~~N/A~~	~~N/A~~
0127	**INITIAL** BONDING												
	PERFORMANCE BOND +	**$96,000.00**	N/A	%	N/A	N/A	N/A	N/A	N/A	%	N/A	N/A	N/A
	PAYMENT BOND +	**$48,000.00**	N/A	%	N/A	N/A	N/A	N/A	N/A	%	N/A	N/A	N/A
	+ Total FFP plus T&M												

ADDITIONAL BONDING WILL BE REQUIRED PER INDIVIDUAL TASK ORDER

(Am-0001)

NOTES:

1. PRICE PROPOSALS. Unit prices of each Contract Line Item Number (CLIN) in the proposal include all costs of subcontracting each CLIN.

2. UNIT PRICE COMPOSITION

2.1. Direct Labor.

a. Unit prices in the Proposal Schedule for CLINs (Construction & Services Categories)that reflect labor subject to the Davis-Bacon Act are subdivided into "Wage Rate," and "Fringe Benefits," and "Labor Burden" subcategories that include both prime and subcontractor rates. (Columns C, D, and E, respectively)

b. Offerors shall place, in the "Wage Rate" and "Fringe Benefits" columns, their costs for the particular labor category listed. "Wage Rates" and "Fringe Benefits" shall consist of the cost of labor and fringe benefits for work classified under Davis-Bacon; or the offeror's cost for service work classified under the Service Contract Act. In no event will the Government accept costs for a labor classification that are less than the rates required for wages and fringes under the Davis-Bacon Act, or the Service Contract Act, as applicable.

c. "Labor Burden" shall include all other costs associated with each labor category, including but not limited to: Social Security (FICA), Federal Unemployment Compensation (FUCI), State Unemployment Compensation (SUCI), Workmen's Compensation Insurance (WCI), liability insurances, etc.

d. Offerors understand that the contractor (and its subcontractors) under any contract awarded under this solicitation shall be bound, to the extent required by law, to pay employees, at the minimum, the prevailing applicable Davis-Bacon Act or Service Contract Act wage rates at the time the contract is awarded, or as adjusted by the wage determinations in effect at the time each option is exercised.

2.2. Markup.

a. Offerors shall place, in the Firm-Fixed-Price (FFP) Markup and Time and Material (T&M) Markup subdivision for Professional Labor Categories and Construction & Services Labor Categories, as follows:

(1) FFP Markup. Prices for all indirect costs on the work category under the CLINs, including, but not limited to:

(a) Overhead (home office and field) and General & Administrative (G&A) expenses;

(b) Markups associated with the cost of subcontracting;
(c) All other indirect costs the Offeror associates with doing the work;
(d) Travel/commuting around Island of Oahu.

NOTE: Profit is NOT included in the FFP Markup. Profit will be negotiated for each task order. See paragraph 2.2.g. below.

(2) T&M Markup. Prices for all indirect costs on the work category under the CLINs, including, but not limited to:

(a) Overhead (home office and field) and General & Administrative (G&A) expenses;
(b) Profit;
(c) Markups associated with the cost of subcontracting;
(d) All other indirect costs the Offeror associates with doing the work;
(e) Travel/commuting around Island of Oahu.

NOTE: Profit is included in the T&M Markup. See paragraph 2.2.g. below.

b. Construction & Services Labor Categories - Markup shall not include travel from Oahu to other locations covered by the contract; those costs will be addressed at the time each task order is negotiated. Mark up shall not include locality tax (i.e. Hawaii State General Excise Tax). These taxes will be included in the individual task orders based on the tax rate applicable in the location where the work is performed.

c. Professional Labor Categories - Markup shall not include travel from Oahu to other locations covered by the contract; those costs will be addressed at the time each task order is negotiated. The markup cost shall also include the costs of fringe benefits and labor burden, but shall not include locality tax (i.e. Hawaii State General Excise Tax). These taxes will be included in the individual task orders based on the tax rate applicable in the location where the work is performed.

d. Markup costs shall not include the costs of Performance and Payment Bonds which will be paid for separately under another CLIN.

e. Material and Equipment - Markup for material and equipment will be addressed at the time each task order is negotiated.

f. Profit - Markup for profit will be determined as follows:

(1) FFP task orders. Profit will be addressed at the time each task order is negotiated.

(2) T&M task orders. T&M markup, which includes profit, will be applied.

2.3. Adjustment for Option Years.

a. At the time an option is exercised, the Offeror shall adjust the wage rate and fringe benefits for each particular labor category in the previous (base or option) proposal schedule by the prevailing applicable wage rate and fringes under the Davis-Bacon Act, the Service Contract Act or Union labor rates and submit the revised proposal schedule to the Government for review and approval.

If non-Union labor rates are reflected for a particular labor category, the adjustment of these wages rates and fringes shall be calculated by the equivalent percentage change in the *Davis-Bacon or Service Contract Act* wage rates and fringes. Example calculation for a change in *Davis-Bacon* basic hourly wage rate:

	Base Year	Option Period
Cement Masons:	$25.91	$26.43

$$\text{Percentage change is: } \frac{\$26.43 - \$25.91}{\$25.91} = .02 \text{ or } 2\%$$

In this example, the Base Year wage rate for a non-Union Cement Mason would be increased by 2% when the option is exercised.

However, if the Offeror's Base Year proposal reflects a prevailing Union labor rate which is higher than the Davis-Bacon rate, then any increase would be based on the Union basic hourly wage rate increase.

b. For Professional Level Categories, escalation of wage rates shall follow the escalation rates as determined in the Data Resources, Inc. (DRI) index.

c. If the wage rate and/or fringe benefits for any particular labor category are adjusted as indicated above, the Offeror shall also adjust the proposed labor burden and markup amounts for that labor category. The labor burden shall be adjusted by the equivalent change in percentage of the affected wage rate. Similarly, the markup amount will be adjusted by the equivalent change in percentage of the total labor cost (wage rate plus fringe benefits plus labor burden)..

d. If no adjustments to the wage rate and fringe benefits are made, no adjustments to the offeror's original labor burden and markup shall be made.

3. ESTIMATED QUANTITIES. Although all contract line item numbers (CLINS) show an estimated quantity, the actual quantity will be on an "as required" basis. The quantities

specified in the Proposal Schedule are estimates for the purpose of evaluation only (to keep Offerors on equal footing during the solicitation phase) and are not purchased by the award of any contract

4. OBLIGATION OF FUNDS. Award of a contract under this solicitation obligates the Government to pay to the contractor, at a minimum, the amount of **$96,000** over the life (base year) of the contract. Upon exercise of an option, additional minimal amounts of **$50,000** per option year may be obligated for payment to the contractor over the period of the option.

5. LABOR RATES FOR WORK OUTSIDE THE AREA OF APPLICABILITY OF THE DAVIS-BACON AND THE SERVICE CONTRACT ACT. The successful offeror, under a contract awarded for this solicitation, in accordance with performing work under any task order in any area outside of the applicability of the Davis-Bacon Act or the Service Contract Act, shall propose and use the appropriate and applicable wage rates pertinent to the work to be done, all in accordance with applicable Federal and local laws and regulations. However, the Offeror's original unit prices for the Professional Categories shall be applicable for all locations covered under this contract.

6. ITMRA PROCUREMENT AUTHORITY. This action is not being conducted under the Information Technology Management Reform Act (ITMRA) of 1996. However, any task orders and modifications requiring Information Technology (IT) resources will be conducted in accordance with the ITMRA.

7. If a modification is submitted which provides for a lump sum adjustment to the total estimated cost for an offer based on unit prices, the application of the lump sum adjustment to each unit price in the Proposal Schedule shall be stated. If it is not stated, the offeror agrees that the lump sum adjustment shall be applied on a pro rata basis to every unit price in the Proposal Schedule.

8. Offerors shall submit an offer on all line items for the Base Period.

9. OPTIONS. The Government reserves the right to exercise the option periods in the following ways:

a. An option may be exercised within the twelve (12) month contract period.

b. If the estimated maximum Base Period or Option Period contract amount is reached before the expiration of the Base Period and/or Option Period, the Government reserves the right to continue awarding task orders in excess of the estimated maximum Base Period and/or Option Period amounts. However, the Government will not exceed the total contract not-to-exceed amount. (See Section 00700, MINIMUM/MAXIMUM CONTRACT VALUE).

c. The Base Period and all Option Periods shall not exceed 36 consecutive months from date of contract award or **$14,800,000.00** - whichever comes first.

10. OTHER THAN NORMAL WORKING HOURS. Normal work hours are defined as: 7:30 a.m-4:00 p.m., Monday through Friday. It is estimated that ten (10) percent of the work in this contract will be accomplished during other than normal working hours. Cost/effort for work performed during other than normal working hours shall be negotiated per individual task order.

11. MATERIAL HANDLING CHARGE: Material costs contained in CLIN 0124 under task orders to be issued under any contract that results from this solicitation shall include material handling costs, including overhead, G&A, profit and any other costs. Handling charges (costs) shall be quantified as a percentage markup to the direct materials costs under CLIN 0124. Material handling costs shall not be included under any other CLINs under the contract.

12. NO A-E DESIGN SERVICES WILL BE PROCURED UNDER THIS CONTRACT. Any architectural, engineering, or surveying work will be incidental to the construction and services to be performed.

13. SUBCONTRACTOR AND CONSULTANTS. Amounts negotiated for subcontracts and consultants not covered under the other categories of labor rates will be included at the time each task order is negotiated in CLIN 0123 as applicable.

14. MEASUREMENTS AND PAYMENT(S). Compensation for all work to be performed under this contract will be made under the payment item(s) listed herein. The principal features of the work to be included under the payment item(s) are noted. Work required by the drawings and specifications and not particularly mentioned shall be included in and be paid for under the contract price for the item to which the work pertains. Price(s) and payment(s) for the item(s) shall cover all work, complete and finished in accordance with the specifications, schedules, and drawings, and shall be full compensation for all work in connection therewith, including quality control and cost of performance and payment bond premiums as specified in the CONTRACT CLAUSES. Price(s) and payment(s) shall constitute full and final compensation for furnishing all materials, equipment, management, supervision, labor, transportation, fuel, power, water, and all incidental items necessary to complete the work, except as otherwise specified to be famished by the Government. For the purpose of CONTRACT CAUSE entitled "PROMPT PAYMENT FOR CONSTRUCTION CONTRACTS", the term "designated
billing office" and "designated payment office" are as follows:

a. Billing Office:
US Army Engineer District, Honolulu
Fort Shafter Resident Office, Bldg 230 Am-0001

Fort Shafter, HI 96858-5440

b. Payment Office:
US Army Engineer District, Honolulu
Attn.: Accounts Payable Branch (CEPOH-RM-FA),
Bldg 230
Fort Shafter, Hawaii 96858-5440

CLIN numbers for payment will be provided with each task order and will correspond to the item numbers in the PROPOSAL SCHEDULE.

15. Time and Materials task orders will be limited to emergency situations only as approved by the Contracting Officer.

16. The contractor will be reimbursed for the bond premiums under each respective task order. There will be no lump-sum reimbursement for such cost at the start of the contract.

END OF SECTION 00010

CLAUSES INCORPORATED BY FULL TEXT

52.204-6 DATA UNIVERSAL NUMBERING SYSTEM (DUNS) NUMBER (JUN 99)

(a) Contractor identification is essential for complying with statutory contract reporting requirements. Therefore, the offeror is requested to enter, in the block with its name and address on the Standard Form 33 or similar document, the annotation "DUNS" followed by the DUNS number which identifies the offeror's name and address exactly as stated in the offer.

(b) If the offeror does not have a DUNS number, it should contact Dun and Bradstreet directly to obtain one. A DUNS number will be provided immediately by telephone at no charge to the offeror. For information on obtaining a DUNS number, the offeror, if located within the United States, should call Dun and Bradstreet at 1-800-333-0505. The offeror should be prepared to provide the following information:

(1) Company name.

(2) Company address.

(3) Company telephone number.

(4) Line of business.

(5) Chief executive officer/key manager.

(6) Date the company was started.

(7) Number of people employed by the company.

(8) Company affiliation.

(c) Offerors located outside the United States may obtain the location and phone number of the local Dun and Bradstreet Information Services office from the Internet Home Page at http://www.customerservice@dnb.com/. If an offeror is unable to locate a local service center, it may send an e-mail to Dun and Bradstreet at globalinfo@dnb.com.

(End of provision)

52.211-2 AVAILABILITY OF SPECIFICATIONS LISTED IN THE DOD INDEX OF SPECIFICATIONS AND STANDARDS (DODISS) AND DESCRIPTIONS LISTED IN THE ACQUISITION MANAGEMENT SYSTEMS AND DATA REQUIREMENTS CONTROL LIST, DOD 5010.12-L (DEC 1999)

Copies of specifications, standards, and data item descriptions cited in this solicitation may be obtained--

(a) From the ASSIST database via the Internet at http://assist.daps.mil; or

(b) By submitting a request to the--Department of Defense Single Stock Point (DoDSSP), Building 4, Section D, 700 Robbins Avenue, Philadelphia, PA 19111-5094, Telephone (215) 697-2667/2179, Facsimile (215) 697-1462.

(End of provision)

52.211-14 NOTICE OF PRIORITY RATING FOR NATIONAL DEFENSE USE (SEP 1990)

Any contract awarded as a result of this solicitation will be ____ DX rated order; X___ DO rated order certified for national defense use under the Defense Priorities and Allocations System (DPAS) (15 CFR 700), and the Contractor will be required to follow all of the requirements of this regulation.

(End of clause)

52.215-1 INSTRUCTIONS TO OFFERORS--COMPETITIVE ACQUISITION (FEB 2000)

(a) Definitions. As used in this provision--

“Discussions” are negotiations that occur after establishment of the competitive range that may, at the Contracting Officer's discretion, result in the offeror being allowed to revise its proposal.

“In writing or written” means any worded or numbered expression which can be read, reproduced, and later communicated, and includes electronically transmitted and stored information.

“Proposal modification” is a change made to a proposal before the solicitation's closing date and time, or made in response to an amendment, or made to correct a mistake at any time before award.

“Proposal revision” is a change to a proposal made after the solicitation closing date, at the request of or as allowed by a Contracting Officer as the result of negotiations.

“Time”, if stated as a number of days, is calculated using calendar days, unless otherwise specified, and will include Saturdays, Sundays, and legal holidays. However, if the last day falls on a Saturday, Sunday, or legal holiday, then the period shall include the next working day.

(b) Amendments to solicitations. If this solicitation is amended, all terms and conditions that are not amended remain unchanged. Offerors shall acknowledge receipt of any amendment to this solicitation by the date and time specified in the amendment(s).

(c) Submission, modification, revision, and withdrawal of proposals. (1) Unless other methods (e.g., electronic commerce or facsimile) are permitted in the solicitation, proposals and modifications to proposals shall be submitted in paper media in sealed envelopes or packages (i) addressed to the office specified in the solicitation, and (ii) showing the time and date specified for receipt, the solicitation number, and the name and address of the offeror. Offerors using commercial carriers should ensure that the proposal is marked on the outermost wrapper with the information in paragraphs (c)(1)(i) and (c)(1)(ii) of this provision.

(2) The first page of the proposal must show--

(i) The solicitation number;

(ii) The name, address, and telephone and facsimile numbers of the offeror (and electronic address if available);

(iii) A statement specifying the extent of agreement with all terms, conditions, and provisions included in the solicitation and agreement to furnish any or all items upon which prices are offered at the price set opposite each item;

(iv) Names, titles, and telephone and facsimile numbers (and electronic addresses if available) of persons authorized to negotiate on the offeror's behalf with the Government in connection with this solicitation; and

(v) Name, title, and signature of person authorized to sign the proposal. Proposals signed by an agent shall be accompanied by evidence of that agent's authority, unless that evidence has been previously furnished to the issuing office.

(3) Submission, modification, or revision, of proposals.

(i) Offerors are responsible for submitting proposals, and any modifications, or revisions, so as to reach the Government office designated in the solicitation by the time specified in the solicitation. If no time is specified in the solicitation, the time for receipt is 4:30 p.m., local time, for the designated Government office on the date that proposal or revision is due.

(ii)(A) Any proposal, modification, or revision received at the Government office designated in the solicitation after the exact time specified for receipt of offers is ``late'' and will not be considered unless it is received before award is made, the Contracting Officer determines that accepting the late offer would not unduly delay the acquisition; and--

(1) If it was transmitted through an electronic commerce method authorized by the solicitation, it was received at the initial point of entry to the Government infrastructure not later than 5:00 p.m. one working day prior to the date specified for receipt of proposals; or

(2) There is acceptable evidence to establish that it was received at the Government installation designated for receipt of offers and was under the Government's control prior to the time set for receipt of offers; or

(3) It is the only proposal received.

(B) However, a late modification of an otherwise successful proposal that makes its terms more favorable to the Government, will be considered at any time it is received and may be accepted.

(iii) Acceptable evidence to establish the time of receipt at the Government installation includes the time/date stamp of that installation on the proposal wrapper, other documentary evidence of receipt maintained by the installation, or oral testimony or statements of Government personnel.

(iv) If an emergency or unanticipated event interrupts normal Government processes so that proposals cannot be received at the office designated for receipt of proposals by the exact time specified in the solicitation, and urgent Government requirements preclude amendment of the solicitation, the time specified for receipt of proposals will be deemed to be extended to the same time of day specified in the solicitation on the first work day on which normal Government processes resume.

(v) Proposals may be withdrawn by written notice received at any time before award. Oral proposals in response to oral solicitations may be withdrawn orally. If the solicitation authorizes facsimile proposals, proposals may be withdrawn via facsimile received at any time before award, subject to the conditions specified in the provision at 52.215-5, Facsimile Proposals. Proposals may be withdrawn in person by an offeror or an authorized representative, if the identity of the person requesting withdrawal is established and the person signs a receipt for the proposal before award.

(4) Unless otherwise specified in the solicitation, the offeror may propose to provide any item or combination of items.

(5) Offerors shall submit proposals in response to this solicitation in English, unless otherwise permitted by the solicitation, and in U.S. dollars, unless the provision at FAR 52.225-17, Evaluation of Foreign Currency Offers, is included in the solicitation.

(6) Offerors may submit modifications to their proposals at any time before the solicitation closing date and time, and may submit modifications in response to an amendment, or to correct a mistake at any time before award.

(7) Offerors may submit revised proposals only if requested or allowed by the Contracting Officer.

(8) Proposals may be withdrawn at any time before award. Withdrawals are effective upon receipt of notice by the Contracting Officer.

(d) Offer expiration date. Proposals in response to this solicitation will be valid for the number of days specified on the solicitation cover sheet (unless a different period is proposed by the offeror).

(e) Restriction on disclosure and use of data. Offerors that include in their proposals data that they do not want disclosed to the public for any purpose, or used by the Government except for evaluation purposes, shall--

(1) Mark the title page with the following legend: This proposal includes data that shall not be disclosed outside the Government and shall not be duplicated, used, or disclosed--in whole or in part--for any purpose other than to evaluate this proposal. If, however, a contract is awarded to this offeror as a result of--or in connection with-- the submission of this data, the Government shall have the right to duplicate, use, or disclose the data to the extent provided in the resulting contract. This restriction does not limit the Government's right to use information contained in this data if it is obtained from another source without restriction. The data subject to this restriction are contained in sheets [insert numbers or other identification of sheets]; and

(2) Mark each sheet of data it wishes to restrict with the following legend: Use or disclosure of data contained on this sheet is subject to the restriction on the title page of this proposal.

(f) Contract award. (1) The Government intends to award a contract or contracts resulting from this solicitation to the responsible offeror(s) whose proposal(s) represents the best value after evaluation in accordance with the factors and subfactors in the solicitation.

(2) The Government may reject any or all proposals if such action is in the Government's interest.

(3) The Government may waive informalities and minor irregularities in proposals received.

(4) The Government intends to evaluate proposals and award a contract without discussions with offerors (except clarifications as described in FAR 15.306(a)). Therefore, the offeror's initial proposal should contain the offeror's best terms from a cost or price and technical standpoint. The Government reserves the right to conduct discussions if the Contracting Officer later determines them to be necessary. If the Contracting Officer determines that the number of proposals that would otherwise be in the competitive range exceeds the number at which an efficient competition can be conducted, the Contracting Officer may limit the number of proposals in the competitive range to the greatest number that will permit an efficient competition among the most highly rated proposals.

(5) The Government reserves the right to make an award on any item for a quantity less than the quantity offered, at the unit cost or prices offered, unless the offeror specifies otherwise in the proposal.

(6) The Government reserves the right to make multiple awards if, after considering the additional administrative costs, it is in the Government's best interest to do so.

(7) Exchanges with offerors after receipt of a proposal do not constitute a rejection or counteroffer by the Government.

(8) The Government may determine that a proposal is unacceptable if the prices proposed are materially unbalanced between line items or subline items. Unbalanced pricing exists when, despite an acceptable total evaluated price, the price of one or more contract line items is significantly overstated or understated as indicated by the application of cost or price analysis techniques. A proposal may be rejected if the Contracting Officer determines that the lack of balance poses an unacceptable risk to the Government.

(9) If a cost realism analysis is performed, cost realism may be considered by the source selection authority in evaluating performance or schedule risk.

(10) A written award or acceptance of proposal mailed or otherwise furnished to the successful offeror within the time specified in the proposal shall result in a binding contract without further action by either party.

(11) The Government may disclose the following information in postaward debriefings to other offerors:

(i) The overall evaluated cost or price and technical rating of the successful offeror;

(ii) The overall ranking of all offerors, when any ranking was developed by the agency during source selection;

(iii) A summary of the rationale for award; and

(iv) For acquisitions of commercial items, the make and model of the item to be delivered by the successful offeror.

(End of provision)

52.216-1 TYPE OF CONTRACT (APR 1984)

The Government contemplates award of a Indefinite Delivery Indefinite Quantity Construction and Service Contract with Time and Material Capability contract resulting from this solicitation.

(End of clause)

52.216-27 SINGLE OR MULTIPLE AWARDS. (OCT 1995)

The Government may elect to award a single delivery order contract or task order contract or to award multiple delivery order contracts or task order contracts for the same or similar supplies or services to two or more sources under this solicitation.

52.219-24 SMALL DISADVANTAGED BUSINESS PARTICIPATION PROGRAM--TARGETS (JAN. 1999)

(a) This solicitation contains a source selection factor or subfactor related to the participation of small disadvantaged business (SDB) concerns in the contract. Credit under that evaluation factor or subfactor is not available to an SDB concern that qualifies for a price evaluation adjustment under the clause at FAR 52.219-23, Notice of Price Evaluation Adjustment for Small Disadvantaged Business Concerns, unless the SDB concern specifically waives the price evaluation adjustment.

(b) In order to receive credit under the source selection factor or subfactor, the offeror must provide, with its offer, targets, expressed as dollars and percentages of total contract value, for SDB participation in any of the Standard Industrial Classification (SIC) Major Groups as determined by the Department of Commerce. The targets may provide for participation by a prime contractor, joint venture partner, teaming arrangement member, or subcontractor; however, the targets for subcontractors must be listed separately.

(End of provision)

52.222-23 NOTICE OF REQUIREMENT FOR AFFIRMATIVE ACTION TO ENSURE EQUAL EMPLOYMENT OPPORTUNITY FOR CONSTRUCTION (FEB 1999)

(a) The offeror's attention is called to the Equal Opportunity clause and the Affirmative Action Compliance Requirements for Construction clause of this solicitation.

(b) The goals for minority and female participation, expressed in percentage terms for the Contractor's aggregate workforce in each trade on all construction work in the covered area, are as follows:

Goals for minority participation for each trade	Goals for female participation for each trade
69.1% (For State of Hawaii Only)	6.9% (For State of Hawaii Only)

These goals are applicable to all the Contractor's construction work performed in the covered area. If the Contractor performs construction work in a geographical area located outside of the covered area, the Contractor shall apply the goals established for the geographical area where the work is actually performed. Goals are published periodically in the Federal Register in notice form, and these notices may be obtained from any Office of Federal Contract Compliance Programs office.

(c) The Contractor's compliance with Executive Order 11246, as amended, and the regulations in 41 CFR 60-4 shall be based on (1) its implementation of the Equal Opportunity clause, (2) specific affirmative action obligations required by the clause entitled "Affirmative Action Compliance Requirements for Construction," and (3) its efforts to meet the goals. The hours of minority and female employment and training must be substantially uniform throughout the length of the contract, and in each trade. The Contractor shall make a good faith effort to employ minorities and women evenly on each of its projects. The transfer of minority or female employees or trainees from Contractor to Contractor, or from project to project, for the sole purpose of meeting the Contractor's goals shall be a violation of the contract, Executive Order 11246, as amended, and the regulations in 41 CFR 60-4. Compliance with the goals will be measured against the total work hours performed.

(d) The Contractor shall provide written notification to the Deputy Assistant Secretary for Federal Contract Compliance, U.S. Department of Labor, within 10 working days following award of any construction subcontract in excess of $10,000 at any tier for construction work under the contract resulting from this solicitation. The notification shall list the --

(1) Name, address, and telephone number of the subcontractor;

(2) Employer's identification number of the subcontractor;

(3) Estimated dollar amount of the subcontract;

(4) Estimated starting and completion dates of the subcontract; and

(5) Geographical area in which the subcontract is to be performed.

(e) As used in this Notice, and in any contract resulting from this solicitation, the "covered area" is U.S. Army Engineer District Area of Responsibility.

52.225-12 C NOTICE OF BUY AMERICAN ACT REQUIREMENT-- CONSTRUCTION MATERIALS UNDER TRADE AGREEMENTS (FEB 2000)

(a) Definitions. Construction material, designated country construction material, domestic construction material, foreign construction material, and NAFTA country construction material, as used in this provision, are defined in the clause of this solicitation entitled ``Buy American Act--Balance of Payments Program--Construction Materials under Trade Agreements" (Federal Acquisition Regulation (FAR) clause 52.225-11).

(b) Requests for determination of inapplicability. An offeror requesting a determination regarding the inapplicability of the Buy American Act or Balance of Payments Program should submit the request to the Contracting Officer in time to allow a determination before submission of offers. The offeror shall include the information and applicable supporting data required by paragraphs (c) and (d) of FAR clause 52.225-11 in the request. If an offeror has not requested a determination regarding the inapplicability of the Buy American Act or Balance of Payments Program before submitting its offer, or has not received a response to a previous request, the offeror shall include the information and supporting data in the offer.

(c) Evaluation of offers. (1) The Government will evaluate an offer requesting exception to the requirements of the Buy American Act or Balance of Payments Program, based on claimed unreasonable cost of domestic construction materials, by adding to the offered price the appropriate percentage of the cost of such foreign construction material, as specified in paragraph (b)(4)(i) of FAR clause 52.225-11.

(2) If evaluation results in a tie between an offeror that requested the substitution of foreign construction material based on unreasonable cost and an offeror that did not request an exception, the Contracting Officer will award to the offeror that did not request an exception based on unreasonable cost.

(d) Alternate offers. (1) When an offer includes foreign construction material, other than designated country or NAFTA country construction material, that is not listed by the Government in this solicitation in paragraph (b)(3) of FAR clause 52.225-11, the offeror also may submit an alternate offer based on use of equivalent domestic, designated country, or NAFTA country construction material.

(2) If an alternate offer is submitted, the offeror shall submit a separate Standard Form 1442 for the alternate offer, and a separate price comparison table prepared in accordance with paragraphs (c) and (d) of FAR clause 52.225-11 for the offer that is based on the use of any foreign construction material for which the Government has not yet determined an exception applies.

(3) If the Government determines that a particular exception requested in accordance with paragraph (c) of FAR clause 52.225-11 does not apply, the Government will evaluate only those offers based on use of the equivalent domestic, designated country, or NAFTA country construction material, and the offeror shall be required to furnish such domestic, designated country, or NAFTA country construction material. An offer based on use of the foreign construction material for which an exception was requested--

(i) Will be rejected as nonresponsive if this acquisition is conducted by sealed bidding; or

(ii) May be accepted if revised during negotiations.

(End of provision)

52.233-2 SERVICE OF PROTEST (AUG 1996)

(a) Protests, as defined in section 33.101 of the Federal Acquisition Regulation, that are filed directly with an agency, and copies of any protests that are filed with the General Accounting Office (GAO), shall be served on the Contracting Officer (addressed as follows) by obtaining written and dated acknowledgment of receipt from:
U.S. Army Engineer District, Honolulu
Corps of Engineers, Bldg 230
ATTN: Contracts Division , CEPOH-CT
Fort Shafter, HI 96858-5440

(b) The copy of any protest shall be received in the office designated above within one day of filing a protest with the GAO.

(End of provision)

52.236-28 PREPARATION OF PROPOSALS--CONSTRUCTION (OCT 1997)

(a) Proposals must be (1) submitted on the forms furnished by the Government or on copies of those forms, and (2) manually signed. The person signing a proposal must initial each erasure or change appearing on any proposal form.

(b) The proposal form may require offerors to submit proposed prices for one or more items on various bases, including--

(1) Lump sum price;

(2) Alternate prices;

(3) Units of construction; or

(4) Any combination of paragraphs (b)(1) through (b)(3) of this provision.

(c) If the solicitation requires submission of a proposal on all items, failure to do so may result in the proposal being rejected without further consideration. If a proposal on all items is not required, offerors should insert the words ``no proposal'' in the space provided for any item on which no price is submitted.

(d) Alternate proposals will not be considered unless this solicitation authorizes their submission.

(End of provision)

252.204-7001 COMMERCIAL AND GOVERNMENT ENTITY (CAGE) CODE REPORTING (AUG 199)

(a) The offeror is requested to enter its CAGE code on its offer in the block with its name and address. The CAGE code entered must be for that name and address. Enter ``CAGE'' before the number.

(b) If the offeror does not have a CAGE code, it may ask the Contracting Officer to request one from the Defense Logistics Information Service (DLIS). The Contracting Officer will--

(1) Ask the Contractor to complete section B of a DD Form 2051, Request for Assignment of a Commercial and Government Entity (CAGE) Code;

(2) Complete section A and forward the form to DLIS; and

(3) Notify the Contractor of its assigned CAGE code.

(c) Do not delay submission of the offer pending receipt of a CAGE code.

(End of provision)

S-1 POTENTIAL FOR ASBESTOS ABATEMENT (NOV 1998)

The Government is uncertain as to the presence of asbestos in the building(s) or structure(s) to be worked on by the Contractor. If asbestos is discovered during the work, it will be handled in accordance with statement entitled, “PRICE ADJUSTMENT FOR CONTINGENT SCOPE OF WORK", found in Section 00800 of this solicitation.

[End of Statement]

S-19.3 SMALL DISADVANTAGED BUSINESS GOAL FOR SMALL BUSINESS SUBCONTRACTING PLAN

When a small business subcontracting plan is required by FAR clause entitled, "SMALL BUSINESS SUBCONTRACTING PLAN", the minimum goal that will be accepted for subcontracting with Small Disadvantaged Business is five percent (5%).

[End of Statement]

S-28.3 PENAL SUM AND FORM OF OFFER GUARANTEE

(Applicable to offers exceeding $100,000)

Each offeror shall submit with its offer a separate offer guarantee using Standard From 24, Bid Bond, with good and sufficient surety or sureties acceptable to the Government, or other security as provided in the clause entitled OFFER GUARANTEE in the CONTRACT CLAUSES section. **This security shall be in the form of four hundred eighty thousand dollars($480,000) which is twenty percent of the estimated contract maximum for the base year.**

Failure to submit a offer guarantee by the time and date set for the receipt of proposals may be cause for rejection of a proposal, except as provided in provision 52.215-1, Instructions to Offerors--Competitive Acquisition.

"End of Statement)"

S-36.2 MAGNITUDE OF THE PROPOSED PROJECT [FAR 36.204]

(a) Physical Characteristics:

Provide a rapid response to maintenance, major repair and minor construction situations relating, but not limited to, the civil, architectural, mechanical, plumbing, structural, electrical, HVAC, instrumentation, security and safety of medical facilities, primarily MEDCOM, and other Government facilities in a cost effective manner. Government medical facility major repair and minor construction shall conform to the requirements of the Joint Commission on Accreditation of Healthcare, Organizations (JCAHO), Guidelines for Construction and Equipment of Hospital and Medical Facilities, and Accreditation Manual for Hospitals. Approximately 10% of the work may be for non-MEDCOM facilities. The contractor will be required to furnish all labor, materials, permits, equipment, and services necessary to manage and accomplish designated deliveries, recommending a solution, and remediating the problem in a timely and efficient manner. Task orders may require the Contractor to develop a plan which identifies work to be performed, new equipment and materials to be installed, work procedures, and management approach. The Contractor may then be required to implement the plan and prepare documentation on operation and maintenance, training, warranties, and other required items.

(b) Estimated Price Range: For each contract, the dollar value of the contracting during the base period is a stated minimum quantity of $96,000.00 with a potential dollar value estimated maximum of $4,800,000.00. A maximum of $4,800,000.00 will be awarded between the two (2) contracts during the base period based on competition between the two successful offerors. If the options are exercised, the stated minimum quantity and the estimated potential maximum amount for each option period are $50,000.000 and $5,000,000.00, respectively. A maximum of $5,000,000.00 will be awarded between the two (2) contracts based on competition between the two successful offerors during each option period.

[End of Statement]

SECTION 00210
PROPOSAL SUBMISSION REQUIREMENTS

1.0 **PROPOSAL.** Offerors shall strictly adhere to the requirements in this Section 00210 when preparing the proposal to be submitted in response to this request for proposals (RFP).

2.0 **PROPOSAL FORMAT.**

2.1 The proposal shall be submitted in **three (3) separate envelopes.** All proposal revisions shall he submitted as page replacements with revised text readily identifiable, e.g. bold face print or underlining. Proposal replacement pages shall be clearly marked "REVISED", shall show the date of revision, shall be submitted in the appropriate number of copies (e.g., if two copies of the original page was required, then two copies of the revised page will also be required), and shall be of a different color than the original pages they are to replace.

2.1.1 The first envelope shall contain Volume I, TECHNICAL PROPOSAL described in Section 00210, "VOLUME I, TECHNICAL PROPOSAL" Envelope should be clearly marked **"VOLUME I, TECHNICAL PROPOSAL, RFP NO. DACA83-00-R-0010."** Offeror shall submit an original and four (4) copies of Volume I.

2.1.1.1 The first envelope shall also contain Volume I-A, A Sample Workplan, in accordance with DID FRP0007 (Section 0720) for the sample project described in Section 00740, "SUBFACTOR II - TECHNICAL APPROACH, SUB-SUBFACTORS I and II." It should he clearly marked **"VOLUME I-A, SAMPLE TASK ORDER, RFP NO. DACA83-00-R-0010."** Offeror shall submit an original and four (4) copies of Volume I-A.

2.1.2 The second envelope shall contain Volume II, PRICES/COSTS PROPOSAL AND PREAWARD SURVEY INFORMATION described in Section 00210, "VOLUME II, PRICES/COSTS PROPOSAL AND PREAWARD SURVEY INFORMATION." Envelope shall be clearly marked **"VOLUME II, PRICES/COSTS PROPOSAL AND PREAWARD SURVEY INFORMATION, RFP NO. DACA83-00-R-0010."** Offeror shall submit an original and four (4) copies of Volume II.

2.1.3 The third envelope shall contain Volume III, SUBCONTRACTING PLAN described in Section 00210, "VOLUME III, SUBCONTRACTING PLAN." Envelope shall be clearly marked **"VOLUME III, SUBCONTRACTING PLAN, RFP NO. DACA83-00-R-0010."** An original and one (1) copy of Volume III are required.

2.2 Offeror shall provide an INDEX for each of the proposal volumes/sections that shows the title of the subject matter discussed therein and the page number where the information can be found. In particular, Offeror shall specifically reference the topics addressed in this Section 00210 of instructions. The narrative discussions shall be related to Section 01000, unless otherwise stated. Offeror shall clearly tab all information in the proposal so that it is easy to locate.

2.3 Offeror is cautioned that “parroting” of the RFP requirements with a statement of intent to perform does not reveal the Offeror's understanding of the problem or his capability to solve it. The inclusion of “filler” material from previous proposals or commercial applications shall be avoided unless it has a direct application to the objective of this RFP.

3.0 **PROPOSAL CONTENT.** Offeror shall include sufficient details in the proposal, and shall present the details in the same order in which they are requested in this Section 00210 to permit the Government to promptly, completely, and accurately evaluate the proposal from both a technical and a management standpoint. Offeror shall identify any technical uncertainties and assumptions within the requirement set forth in this RFP, and Offeror shall provide specific proposals for the resolution of any technical uncertainties or assumptions so identified. The Government will not make any assumptions concerning the Offeror's intent, capabilities, facilities, or experience. Clear identification of the pertinent details shall rest solely with the Offeror.

4.0 **PROPOSAL LENGTH.** The Government recognizes that Offerors go to considerable expense to prepare proposals for this RFP, so the Government prefers that proposals be practical. Elaborate format, binders, special reproduction techniques, and the like are not necessary nor desired. In short, proposals shall completely and adequately address the requirements as stated in the RFP, and the technical proposal (technical and management factors), **VOLUME I** of the Offeror's proposal **shall not exceed 75 single-spaced, single-sided sheets** (excluding subcontractor endorsements and sample project, Volume I-A). Proposal legibility, clarity, coherence, and contents are important. Proposal pages shall be 8-1/2 x 11 inches in size; however, if drawings or other graphics are submitted, Offerors should reduce them only to the extent that legibility is not lost. Offerors shall not submit verbatim sections of the appendices to this RFP as part of their proposal. Offers that violate these rules unnecessarily delay the evaluation process and may be rejected by the Government after initial evaluation without receiving any further consideration.

5.0 **SUBCONTRACTOR EXPERIENCE/CREDENTIALS.** Subcontractor experience/credentials will be imputed to and evaluated as part of the

proposal if the subcontractors and their experience are identified in the proposal and if the respective subcontractors have provided the prime contractor with firm written commitments to undertake performance as a subcontractor for the prime contractor under any contract that may be awarded as a result of this solicitation. Offerors shall obtain firm written commitments from each of the proposed subcontractors to be used in the performance of work under this contract, and Offerors shall include the written commitments from each of their subcontractors with the proposal.

6.0 **VOLUME I, TECHNICAL PROPOSAL.**

6.1 **TECHNICAL FACTOR.** Offeror's technical approach shall address the items in Section 01000 being sure to include the nature of the requirement as understood by the Offeror, recognition of critical areas of the requirement, and proposed methods to accomplish the requirement. Volume I shall include Offeror's approach to acquisition of labor, resources, materials, facilities, software, and equipment and description of same to be used in accomplishing the requirements of Section 01000.

6.1.1 **SUBFACTOR I - Experience, Past Performance and Capabilities.** Offeror shall show experience in Medical Government facility remediation of failed or failing facilities and facilities systems, in various types of construction-related work, and capability to do the same or similar work.

6.1.1.1 SUB-SUBFACTOR I - Experience (the types and amounts of work performed). Offeror shall provide a list of the principal types of contract work performed in the following categories as related to Section 01000:

- **SAFETY - Life safety upgrade, inflammatory gases and substances, industrial and medical safety, industrial and medical hygiene, medical systems fire protection, Fire Detection & Alarm System, radioactive and laser operations, confined space entry, product acquisition, hazardous materials, protection of work sites and Government property, and protection of workers.**

- **CIVIL - Medical Government facility site planning and layout, roads, parking areas, water distribution systems, storm water, sewage, drainage, and master planning.**

- **ARCHITECTURAL - Medical Government facilities with functional and aesthetic integrity.**

- **ENVIRONMENTAL - Removal and disposal of asbestos, lead-base paint, PCB Balast, and underground storage tanks**

- **STRUCTURAL - Structural engineering for conventional construction, construction materials, computer usage, loading, structural systems, and miscellaneous structural features.**

- **INSTRUMENTATION - Medical instrumentation for energy monitoring and control systems, direct digital control, and fire protection.**

- **NURSE CALL/COMMUNICATION SYSTEM - Medical Nurse Call and telecommunication systems, Data Transmission systems, public address system and fiber optics.**

- **SECURITY - Medical and other Government facility security systems including CCTV and Electronic Entry System.**

- **ELECTRICAL - Medical Government facility electrical power and service supply, distribution, utilization systems including lighting, power generation, and uninterrupted power supply (UPS), Electric Elevators and Coordinated power system protection.**

- **MECHANICAL - Medical Government facility heating, ventilating, and air-conditioning (HVAC), transit tube, incinerators, elevators, sterilization systems (including ethylene oxide systems), plumbing systems (including medical water and waste control) and medical gas systems; biological hazardous medical and low-level radioactive waste systems.**

6.1.1.2 **SUB-SUBFACTOR II - PAST PERFORMANCE** (Quality of Offeror's work and how well Offeror performed). Offerors shall provide information that indicates their ability to perform the proposed contract effort. Offeror shall provide information pertaining to active/completed Federal, state and local government, and/or private contracts performed by the Offeror during the last five years that are directly related to remediation of Medical Government facilities. Offeror shall explain what aspects of the previously performed contracts are relevant to the effort required by this RFP. Offeror shall limit this data to two pages per relevant contract and shall provide the information in the following format:

- Company Name (if different from Offeror's name and Offeror shall explain the circumstances that caused the company name to be changed)

- Project Manager (Engineer) with description of that individuals responsibilities

- Project Title

- Contracting Agency (Government or Private)

- Contract Number

- Description of Effort (Percentage of work performed by the prime contractor and disciplines of work performed)

- Number and severity of problems encountered, type of any subsequent corrective actions, and the effectiveness of the corrective actions

- Overall contract performance record

- Type of Contract (Firm-Fixed Price, Cost-Reimbursement, Incentive, indefinite-Delivery, etc.)

- Period of Performance

- Original Contract Dollar Value and Current/Actual Contract Dollar Value

- Original Completion Date and Current/Actual Completion Date

- Name, Address, and Telephone Number of Administrative Contracting Officer and Contracting officer

* Offerors shall list any subcontractors used, shall identify sizes, types of major mechanical, electrical, and utility control systems equipment used, and shall show the Offeror's percentage of participation on each job listed. The list should indicate the Offeror's experience as a prime contractor. Failure to identify the subcontractors in the proposal shall invalidate their experience/credentials and that invalidated experience/credentials will not be considered nor evaluated by the Government. If Offeror's list of

experience was accomplished as a subcontractor, then the percentage of work that the Offeror experienced (as a subcontractor) on each job shall be shown.

FIRMS LACKING RELEVANT PAST PERFORMANCE HISTORY SHALL RECEIVE A NEUTRAL EVALUATION FOR PAST PERFORMANCE.

6.1.1.3 **SUB-SUBFACTOR III - Capability to do same or similar work including the use of subcontractors.** Offerors shall identify and describe the services of their proposed subcontractors (making reference to the list of principle types of work in paragraph 6.1.1.1 SUB-SUBFACTOR I - Experience) and shall provide their rationale for selecting those subcontractors. The subcontractor's experience/credentials will be entered into and evaluated as part of the proposal if the subcontractors are identified in the proposal, and the proposal includes a written commitment from each subcontractor to undertake performance under any resultant contract. Failure to provide a valid commitment between the prime contractor and the subcontractor shall invalidate the corporate experience and shall not be used as a part of the evaluation of the proposal.

6.1.1.4 **SUB-SUBFACTOR IV - Small Business Program Support.**

6.1.1.4.1 This sub-subfactor will evaluate the Contractor's support of the Small Business Program in relation to providing maximum practicable opportunities to small business (SB), small disadvantaged business (SDB) and women-owned small business (WOSB) concerns, and historically black colleges and universities (HBCU) and minority institutions (MI). As noted in FAR 52.219-8, Utilization of Small Business Concerns, in Section 00700, Contractors must agree to award subcontracts to the above groups to the fullest extent consistent Support Requirements, in Section 00800 for with efficient contract performance. In addition, sub-subfactor will enable evaluation of the participation of firm from the above groups as a prime contractor, including joint venture partner, and team member.

The minimum acceptable level of targets for small business program support for each category for this solicitation is as follows:

SB concerns	23.00% of the total contract value
SDB concerns (including HBCU/MI)	5.00% of the total subcontracted value
WOSB concerns	5.00% of the total subcontracted value

NOTE: The above SB concern target is stated as a <u>percentage of the total contract value</u> instead of percentage of the total subcontract

value as required by FAR clause at 52.219-9, Small Business Subcontracting Plan, in Section 00700 of this solicitation, for individual subcontracting plans.

The above targets for SDB and WOSB concerns are stated as percentage of the total subcontracted value. However, Offerors are required to provide targets as a percentage of total contract value in their proposal. Subcontract awards to SDB concerns (including HBCU/MI) and WOSB concerns count towards meeting the 23.00% target for SB concerns.

In addition to the requirements of this subfactor, large business concerns MUST submit individual subcontracting plan and comply with the requirements of the plan as required by the following clauses in Section 00700 of the solicitation:

(1) FAR 52.219-9 ALT II, Small Business Subcontracting Plan
(2) DFARS 52.219-7003, Small, Small Disadvantaged and Women-Owned Small Business Subcontracting Plan (DoD Contracts)

6.1.1.4.2 U.S. Army encourages all Offerors to propose targets to exceed the above minimum targets to the maximum extent practicable. Offerors shall make an independent assessment of opportunities to SB, SDB (including HBCU/MI), and WOSB concerns to participate in this procurement. Offerors are encouraged to use the U.S. Small Business Administration's Procurement Marketing and Access Network (PRO-Net) at http://pro-net.sba.gov/ to locate potential subcontractors. PRO-Net will enable the offeror to locate SB and WOSB concerns, as well as certified SDB concerns. A listing of HBCUs and MIs, entitled, "2000 United States Department of Education U.S. Accredited Postsecondary Minority Institutions", is available at http://www.ed.gov/offices/OCR/2000minorityinst.html.

6.1.1.4.3 Offerors are required to propose targets expressed as dollars and percentage of the total value of the specific contract period. Any targets proposed will be incorporated into and become part of any resulting contract. Offerors may use their own format to submit their proposed targets as long as all information shown on Attachment 1, Small Business Program Support Participation Targets, in back of Section 00210, is provided. Refer to S-26, Small Business Program Support Requirements, in Section 00800 for additional information.

6.1.1.4.4 The following 2nd level sub-subfactors are equal in weight.

6.1.1.4.4.1 Small Disadvantaged Business (SDB) Participation.

This subfactor will only apply if the SDB prime contractor and/or subcontractor will perform work in the Standard Industrial Classification (SIC) Major Groups authorized by the Department of

Commerce. Refer to Attachment 2, in back of Section 00210, for current list of authorized SIC Major Groups. Refer to FAR provision at 52.219-24, Small Disadvantaged Business Participation Program –Targets, and FAR clause at 52.219-25, Small Disadvantaged Business Participation Program – Disadvantaged Status and Reporting, in Section 00700, for information and contract requirement, respectively. Additional information about SDB Participation Program can be found in FAR Subpart 19.12.

Offeror shall provide narrative with charts to demonstrate the proposed extent of participation of SDB concerns in the authorized SIC Major Groups for the base period and each option period, as described below. The offeror shall also provide proposed subcontracting procedures to demonstrate efforts to be taken to ensure targets will be met or exceeded.

(A) The extent of participation of SDB concerns in terms of the total value of the contract period. Offeror must provide the following targets, expressed as dollars and percentages of the total value for the base period and each option period. In addition, the offeror shall provide a cumulative target, expressed as dollars and percentage of the total value of the contract (i.e., base plus all option periods).

i. Targets for SDB participation in each of the applicable, authorized SIC Major Groups;

ii. Total target for SDB participation by the prime contractor, including joint venture partners, and team members; and

iii. Total target for SDB participation by subcontractors.

(B) The extent to which SDB concerns are specifically identified. Any SDB concerns specifically identified will be incorporated into and become part of any resulting contract. Refer to S-26, Small Business Program Support Requirements, in Section 00800.

6.1.1.4.4.2 Small Business Concern Participation.

This subfactor is not limited to the SIC Major Groups authorized by the Department of Commerce. Offeror shall provide narrative with charts to demonstrate the extent of participation of SB concerns in terms of the total value of the contract period. The offeror shall also provide proposed subcontracting procedures to demonstrate efforts to be taken to ensure targets will be met or exceeded.

(A) The extent of participation of SB and WOSB concerns, and HBCU/MI. Offeror must provide the following targets, expressed as dollars and percentages of the total value for the base period and each

option period. In addition, the offeror shall provide cumulative targets, expressed as dollars and percentage of the total value of the contract (i.e., base plus all option periods).

i. SB concerns

ii. WOSB concerns

iii. HBCU/MI

(B) The extent to which SB and WOSB concerns and HBCU/MI's are specifically identified. Any concern specifically identified will be incorporated into and become part of any resulting contract. Refer to S-26, Small Business Program additional information.

6.1.2 **SUBFACTOR II - Technical Approach**.

6.1.2.1 **SUB-SUBFACTOR I - Work Plan for Sample Task Order facility and facility systems**. This will he evidenced by the sample project. See Section 00740 for Scope of Work, with sketches, list of required specifications and task order requirements.

6.1.2.2 **SUB-SUBFACTOR II - Task Order Price Proposal Preparation Plan**. Offeror shall demonstrate their approach to the management of task order price proposal preparation- (Section 00720, DATA ITEM DESCRIPTION, Price Proposal.)

Task Order RFP - Firm-Fixed Price Task Order. This will be evidenced by sample project. See Section 00740 for Scope of Work, with sketches, list of required specifications and task order requirements.

6.1.2.3 **SUB-FACTOR III - Timely Response**. Provide in a narrative format how the Offeror plans to submit the required DATA ITEM DESCRIPTION (DID) (Section 00720) for individual task orders in as short a time as possible. Offerors shall document the time it would take their firm to submit the required DID's from the receipt of a RFP for a task order; the time it would take to submit a site survey report; the time it would take to provide a work plan; the time it would take to submit an acceptable price proposal; and the time it would take to submit the required DID's an a time-and-materials task order after award. Provide narrative statements for each of the following levels of effort.

6.1.2.3.1 Small Effort - Total amount of task order estimated to be less than $100,000.

6.1.2.3.2 Medium Effort - Total amount of task order estimated to he between $100,000 and $500,000.

6.1.2.3.3 Large Effort - Total amount of the task order estimated over $500,000.

Offerors shall also demonstrate their capability to respond rapidly in "emergency" situations. Offerors shall indicate their plan for responding within 2 to 4 hours and for providing the necessary personnel to handle a variety of emergency situations.

6.1.2.4 **SUB-SUBFACTOR IV - Medical Standards Knowledge and Experience**. Offerors shall demonstrate that the Offeror and any subcontractors used have a knowledge and experience with Medical Government standards, including but not limited to Joint Commission on Accreditation of Hospital Organizations (JCAHO), American Hospital Association (AHA), National Fire Protection Association (NFPA), and Americans with Disabilities Act (ADA).

6.2 **MANAGEMENT FACTOR.**

6.2.1 **SUBFACTOR I - Organization and Personnel Qualifications.** Offeror shall furnish an organization chart depicting the management structure proposed for the RFP and any resulting contract. The management techniques and controls that will be implemented to assure a rationale for subcontracting and the control of subcontractors shall also be provided. The Offeror's organization will show supervision and quality control during all phases of work. Offeror shall identify the principal program personnel as outlined in Section 01000, RESPONSIBILITIES, with their areas of responsibility and relationship with the management structure. The qualifications of the principal program personnel shall be provided in resume format. Orientation toward Medical Government facility analysis and remediation shall be demonstrated. Offeror shall have personnel of suitable background and experience to assure that all the anticipated disciplines required in the RFP and proposed contract are represented. Offeror's identification and commitment of key personnel to this contract will be evaluated. For all key personnel proposed, Offeror shall show if the employees will be employed full or part time, if they will be located on-site or not, if they will have single or dual function responsibilities, and what those responsibilities will be. Offeror shall obtain firm written commitments to work for the Offeror on any contract that results from this solicitation from all key employees. Offeror shall provide the firm written commitments with the proposal.

6.2.2 **SUBFACTOR II - Cost Control.** Offerors shall demonstrate their ability to establish and maintain: (1) a cost accounting system which is adequate to maintain integrity of cost applicable to a Time and Materials Contract; (2) a time keeping system that identifies employee's labor by intermediate or final cost objectives (3) a labor distribution system that charges direct and indirect labor to the appropriate cost objective and (4) a purchasing system that incorporates competition.

6.2.3 **SUBFACTOR III - Corporate Experience and Support.** Offeror shall demonstrate related corporate experience and knowledge in Medical Government facilities remediation programs. Corporate support is defined as the proven ability to provide any resources from other parts of the corporation for unusual needs such as increased workload in a compressed time frame. Offeror shall document any criteria or experience that uniquely qualifies the Offeror to successfully fulfill the proposed contract. Offeror shall provide a company resource chart that includes the following information:

- The number of personnel employed, also give breakdown of each discipline

- A description of related experience (as stated in Section 01000)

Resumes for all major personnel demonstrating experience requirements as outlined in Section 01000 including the Program Manager, the Project Manager/Engineer, the Project Superintendent, the technical staff of engineers and architects, the Quality Control Manager, the Quality Control Officer, the Safety Engineer and the Site Safety Officer.

7.0 **VOLUME II, PRICES/COSTS PROPOSAL AND PREAWARD SURVEY INFORMATION**. This volume shall consist of the prices/costs proposal and preaward survey information and shall conform to the requirements set forth in this section.

7.1 **PRICES/COSTS PROPOSAL**.

7.1.1 Price Proposal - General

Offerors shall submit their proposal in an original & four (4) copies with a completed Standard Form 1442, SOLICITATION, OFFER, AND AWARD; Section 00010, SUPPLIES OR SERVICES AND PRICES/COSTS (PROPOSAL SCHEDULE); Section 00600, REPRESENTATION & CERTIFICATIONS; Bid Bonds as provided in this solicitation; and additional documentation to explain and support the price proposed.

7.1.2 Sample Task Order - Cost and Price Documentation

Additional cost and price support documentation shall include a break out of the following costs for the sample task order. All information submitted shall support the price proposed for the sample task order and shall be presented in sufficient detail or cross references to clearly establish the relationship of the information provided to the price proposed.

7.1.2.1 **Direct Labor**. Offeror shall show each discipline/job classification proposed, the number of employees in each discipline/classification, the number of hours the Offeror plans to work each individual per week, the direct labor rate per hour and the fringe benefit rate per hour for each individual proposed. Offerors are reminded that they shall at least pay their employees the rates shown on the U.S. Department of Labor Wage Rate Determinations for services/General Wage Decisions for construction. Applicable wage determinations/decisions are included in this solicitation. If Offeror does not use the wage rate classifications (job titles, disciplines) shown on the Wage Rate Determinations/Decisions in this solicitation, Offeror shall provide with the proposal a “stratification” of the wage classification and rate proposed. For example: If the proposed employee has “dual-hat” responsibilities, Offeror may want to combine two of the disciplines/job classifications shown on the Wage Rate Determinations/Decisions and “stratify” the two respective hourly rates (based upon the amount of time the employee will spend working in each discipline/job classification) into one hourly labor rate that is more commensurate with the combined responsibilities. Offeror's stratification shall include the Offeror's calculations and narrative explanations for those calculations showing how and why the proposed stratified rate was derived.

7.1.2.2 **Indirect Expenses (Overhead).** Offeror shall show overhead rate proposed, method of calculating that rate, and shall itemize the various costs included in the "base" for that rate. Narrative explanations shall accompany all costs/calculations as necessary to clearly explain how the Offeror arrived at the rate and costs proposed.

7.1.2.3 **Materials & Equipment.** Offeror shall list in the proposal all material and equipment proposed by item description, make and model number of equipment, quantity, and cost for each item listed.

7.1.2.4 **Subcontracts.** Offeror shall list all subcontracts by subcontractor name, type of service/construction to be subcontracted, and cost of each.

7.1.2.5 **General and Administrative(G&A).** Offeror shall show the G&A rate proposed, explain (numerically and narratively) how the Offeror calculated that rate, and list all of the costs that are included in the “base” for that rate.

7.1.2.6 **Profit.** Offeror shall show profit rate proposed and provide rationale (explain numerically and narratively) for that rate for T&M only (Profit for FFP will be negotiated for each individual task order). If Offeror has concerns about performing the work described in this solicitation, Offeror shall list those concerns (real or perceived risks) that support the profit rate proposed.

7.1.3 Information required in Sec 00010, Note 2, Unit Price Composition is not intended to be restrictive. Offerors are encouraged to submit any other cost or financial information which may be helpful in the understanding and evaluation of their cost proposal; however, superfluous or elaborate documents are not desired. Offerors shall agree that authorized Government representatives may have access to applicable accounting and estimating documents and records not submitted with the proposal if needed to complete evaluation of the cost proposal.

7.1.4 All information pertaining to any costs associated with the line items contained in the Proposal Schedule (Section 00010) shall be confined to Volume II. Offeror shall not include any cost information in any other volume of their proposal except Volume No. II.

7.2 **PREAWARD SURVEY INFORMATION.**

Offerors shall submit all preaward survey information in Volume II of their proposal.

NOTE: Offerors shall notify their bank/suppliers that the Corps of Engineers may contact them, and shall authorize the bank/suppliers to release the following information regarding the Offeror's account. If written authorization is required by their bank, Offerors shall provide that authorization with their proposal.

- Name and Telephone Number of Bank Point of Contact
- Number of years business has been conducted with each bank
- Types of open accounts (checking, loans, etc.)
- Balance of current accounts (the bank will provide a “range of figures” for this information (i.e., medium five-figure range, etc.)

- Means by which loans are secured and if paid as agreed

- Point of Contact and Telephone Number of Three (3) Different Suppliers

8.0 **VOLUME III, SUBCONTRACTING PLAN.**

****THIS PARAGRAPH APPLIES TO LARGE BUSINESSES ONLY****

8.1 All large business Offerors shall submit a subcontracting plan with their technical and prices/cost proposal. The plan should be prepared in accordance with FAR 52.219-9. Failure to submit an acceptable subcontracting plan may make the Offeror ineligible for award of the contract. The subcontracting plan will be reviewed for compliance and will be scored in accordance with AFARS 19.7, Appendix CC. The submission of the subcontracting plan is in no way advantageous to large businesses over any small business in the evaluation process.

8.2 The following are the Honolulu District's goals for total subcontracted dollars:

8.2.1 Small Business Subcontracting Goal - 55.0%.

8.2.2 Small Disadvantaged Business (SDB) Subcontracting Goal - 8.0%.

8.2.3 Woman Owned Small Business (WOSB) Subcontracting Goal - 3.0%.

CLAUSES INCORPORATED BY FULL TEXT

52.202-1 DEFINITIONS (OCT 1995) --ALTERNATE I (APR 1984)

(a) "Head of the agency" (also called "agency head") or "Secretary" means the Secretary (or Attorney General, Administrator, Governor, Chairperson, or other chief official, as appropriate) of the agency, including any deputy or assistant chief official of the agency; and the term "authorized representative" means any person, persons, or board (other than the Contracting Officer) authorized to act for the head of the agency or Secretary.

(b) "Commercial component" means any component that is a commercial item.

(c) "Component" means any item supplied to the Federal Government as part of an end item or of another component.

(d) "Nondevelopmental item" means--

(1) Any previously developed item of supply used exclusively for governmental purposes by a Federal agency, a State or local government, or a foreign government with which the United States has a mutual defense cooperation agreement;

(2) Any item described in paragraph (e)(1) of this definition that requires only minor modification or modifications of a type customarily available in the commercial marketplace in order to meet the requirements of the procuring department or agency; or

(3) Any item of supply being produced that does not meet the requirements of paragraph (e)(1) or (e)(2) solely because the item is not yet in use.

(e) "Contracting Officer" means a person with the authority to enter into, administer, and/or terminate contracts and make related determinations and findings. The term includes certain authorized representatives of the Contracting Officer acting within the limits of their authority as delegated by the Contracting Officer.

(f) Except as otherwise provided in this contract, the term "subcontracts" includes, but is not limited to, purchase orders and changes and modifications to purchase orders under this contract.

52.203-3 GRATUITIES (APR 1984)

(a) The right of the Contractor to proceed may be terminated by written notice if, after notice and hearing, the agency head or a designee determines that the Contractor, its agent, or another representative--

(1) Offered or gave a gratuity (e.g., an entertainment or gift) to an officer, official, or employee of the Government; and

(2) Intended, by the gratuity, to obtain a contract or favorable treatment under a contract.

(b) The facts supporting this determination may be reviewed by any court having lawful jurisdiction.

(c) If this contract is terminated under paragraph (a) of this clause, the Government is entitled--

(1) To pursue the same remedies as in a breach of the contract; and

(2) In addition to any other damages provided by law, to exemplary damages of not less than 3 nor more than 10 times the cost incurred by the Contractor in giving gratuities to the person concerned, as determined by the agency head or a designee. (This subparagraph (c)(2) is applicable only if this contract uses money appropriated to the Department of Defense.)

(d) The rights and remedies of the Government provided in this clause shall not be exclusive and are in addition to any other rights and remedies provided by law or under this contract.

(End of clause)

52.203-5 COVENANT AGAINST CONTINGENT FEES (APR 1984)

(a) The Contractor warrants that no person or agency has been employed or retained to solicit or obtain this contract upon an agreement or understanding for a contingent fee, except a bona fide employee or agency. For breach or violation of this warranty, the Government shall have the right to annul this contract without liability or, in its discretion, to deduct from the contract price or consideration, or otherwise recover, the full amount of the contingent fee.

(b) "Bona fide agency," as used in this clause, means an established commercial or selling agency, maintained by a contractor for the purpose of securing business, that neither exerts nor proposes to exert improper influence to solicit or obtain Government contracts nor holds itself out as being able to obtain any Government contract or contracts through improper influence.

"Bona fide employee," as used in this clause, means a person, employed by a contractor and subject to the contractor's supervision and control as to time, place, and manner of performance, who neither exerts nor proposes to exert improper influence to solicit or obtain Government contracts nor holds out as being able to obtain any Government contract or contracts through improper influence.

"Contingent fee," as used in this clause, means any commission, percentage, brokerage, or other fee that is contingent upon the success that a person or concern has in securing a Government contract.

"Improper influence," as used in this clause, means any influence that induces or tends to induce a Government employee or officer to give consideration or to act regarding a Government contract on any basis other than the merits of the matter.

(End of clause)

52.203-6 SVC RESTRICTIONS ON SUBCONTRACTOR SALES TO THE GOVERNMENT (JUL 1995)

(a) Except as provided in (b) of this clause, the Contractor shall not enter into any agreement with an actual or prospective subcontractor, nor otherwise act in any manner, which has or may have the effect of restricting sales by such subcontractors directly to the Government of any item or process (including computer software) made or furnished by the subcontractor under this contract or under any follow-on production contract.

(b) The prohibition in (a) of this clause does not preclude the Contractor from asserting rights that are otherwise authorized by law or regulation.

(c) The Contractor agrees to incorporate the substance of this clause, including this paragraph (c), in all

subcontracts under this contract which exceed $100,000.

52.203-7 ANTI-KICKBACK PROCEDURES. (JUL 1995)

(a) Definitions.

"Kickback," as used in this clause, means any money, fee, commission, credit, gift, gratuity, thing of value, or compensation of any kind which is provided, directly or indirectly, to any prime Contractor, prime Contractor employee, subcontractor, or subcontractor employee for the purpose of improperly obtaining or rewarding favorable treatment in connection with a prime contract or in connection with a subcontract relating to a prime contract.

"Person," as used in this clause, means a corporation, partnership, business association of any kind, trust, joint-stock company, or individual.

"Prime contract," as used in this clause, means a contract or contractual action entered into by the United States for the purpose of obtaining supplies, materials, equipment, or services of any kind.

"Prime Contractor," as used in this clause, means a person who has entered into a prime contract with the United States.

"Prime Contractor employee," as used in this clause, means any officer, partner, employee, or agent of a prime Contractor.

"Subcontract," as used in this clause, means a contract or contractual action entered into by a prime Contractor or subcontractor for the purpose of obtaining supplies, materials, equipment, or services of any kind under a prime contract.

"Subcontractor," as used in this clause, (1) means any person, other than the prime Contractor, who offers to furnish or furnishes any supplies, materials, equipment, or services of any kind under a prime contract or a subcontract entered into in connection with such prime contract, and (2) includes any person who offers to furnish or furnishes general supplies to the prime Contractor or a higher tier subcontractor.

"Subcontractor employee," as used in this clause, means any officer, partner, employee, or agent of a subcontractor.

(b) The Anti-Kickback Act of 1986 (41 U.S.C. 51-58) (the Act), prohibits any person from -

(1) Providing or attempting to provide or offering to provide any kickback;

(2) Soliciting, accepting, or attempting to accept any kickback; or

(3) Including, directly or indirectly, the amount of any kickback in the contract price charged by a prime Contractor to the United States or in the contract price charged by a subcontractor to a prime Contractor or higher tier subcontractor.

(c)(1) The Contractor shall have in place and follow reasonable procedures designed to prevent and detect possible violations described in paragraph (b) of this clause in its own operations and direct business relationships.

(2) When the Contractor has reasonable grounds to believe that a violation described in paragraph (b) of this clause may have occurred, the Contractor shall promptly report in writing the possible violation. Such reports shall be made to the inspector general of the contracting agency, the head of the contracting agency if the agency does not have an inspector general, or the Department of Justice.

(3) The Contractor shall cooperate fully with any Federal agency investigating a possible violation described in paragraph (b) of this clause.

(4) The Contracting Officer may (i) offset the amount of the kickback against any monies owed by the United States under the prime contract and/or (ii) direct that the Prime Contractor withhold, from sums owed a subcontractor under the prime contract, the amount of any kickback. The Contracting Officer may order the monies withheld under subdivision (c)(4)(ii) of this clause be paid over to the Government unless the Government has already offset those monies under subdivision (c)(4)(i) of this clause. In either case, the Prime Contractor shall notify the Contracting Officer when the monies are withheld.

(5) The Contractor agrees to incorporate the substance of this clause, including this subparagraph (c)(5) but excepting subparagraph (c)(1), in all subcontracts under this contract which exceed $100,000.

52.203-8 CANCELLATION, RESCISSION, AND RECOVERY OF FUNDS FOR ILLEGAL OR IMPROPER ACTIVITY (JAN 1997)

(a) If the Government receives information that a contractor or a person has engaged in conduct constituting a violation of subsection (a), (b), (c), or (d) of Section 27 of the Office of Federal Procurement Policy Act (41 U.S.C. 423) (the Act), as amended by section 4304 of the 1996 National Defense Authorization Act for Fiscal Year 1996 (Pub. L. 104-106), the Government may--

(1) Cancel the solicitation, if the contract has not yet been awarded or issued; or

(2) Rescind the contract with respect to which--

(i) The Contractor or someone acting for the Contractor has been convicted for an offense where the conduct constitutes a violation of subsection 27 (a) or (b) of the Act for the purpose of either--

(A) Exchanging the information covered by such subsections for anything of value; or

(B) Obtaining or giving anyone a competitive advantage in the award of a Federal agency procurement contract; or

(ii) The head of the contracting activity has determined, based upon a preponderance of the evidence, that the Contractor or someone acting for the Contractor has engaged in conduct constituting an offense punishable under subsections 27(e)(1) of the Act.

(b) If the Government rescinds the contract under paragraph (a) of this clause, the Government is entitled to recover, in addition to any penalty prescribed by law, the amount expended under the contract.

(c) The rights and remedies of the Government specified herein are not exclusive, and are in addition to any other rights and remedies provided by law, regulation, or under this contract.

52.203-10 PRICE OR FEE ADJUSTMENT FOR ILLEGAL OR IMPROPER ACTIVITY (JAN 1997)

(a) The Government, at its election, may reduce the price of a fixed-price type contract and the total cost and fee under a cost-type contract by the amount of profit or fee determined as set forth in paragraph (b) of this clause if the head of the contracting activity or designee determines that there was a violation of subsection 27 (a), (b), or (c) of the Office of Federal Procurement Policy Act, as amended (41 U.S.C. 423), as implemented in section 3.104 of the Federal Acquisition Regulation.

(b) The price or fee reduction referred to in paragraph (a) of this clause shall be--

(1) For cost-plus-fixed-fee contracts, the amount of the fee specified in the contract at the time of award;

(2) For cost-plus-incentive-fee contracts, the target fee specified in the contract at the time of award, notwithstanding any minimum fee or "fee floor" specified in the contract;

(3) For cost-plus-award-fee contracts--

(i) The base fee established in the contract at the time of contract award;

(ii) If no base fee is specified in the contract, 30 percent of the amount of each award fee otherwise payable to the Contractor for each award fee evaluation period or at each award fee determination point.

(4) For fixed-price-incentive contracts, the Government may--

(i) Reduce the contract target price and contract target profit both by an amount equal to the initial target profit specified in the contract at the time of contract award; or

(ii) If an immediate adjustment to the contract target price and contract target profit would have a significant adverse impact on the incentive price revision relationship under the contract, or adversely affect the contract financing provisions, the Contracting Officer may defer such adjustment until establishment of the total final price of the contract. The total final price established in accordance with the incentive price revision provisions of the contract shall be reduced by an amount equal to the initial target profit specified in the contract at the time of contract award and such reduced price shall be the total final contract price.

(5) For firm-fixed-price contracts, by 10 percent of the initial contract price or a profit amount determined by the Contracting Officer from records or documents in existence prior to the date of the contract award.

(c) The Government may, at its election, reduce a prime contractor's price or fee in accordance with the procedures of paragraph (b) of this clause for violations of the Act by its subcontractors by an amount not to exceed the amount of profit or fee reflected in the subcontract at the time the subcontract was first definitively priced.

(d) In addition to the remedies in paragraphs (a) and (c) of this clause, the Government may terminate this contract for default. The rights and remedies of the Government specified herein are not exclusive, and are in addition to any other rights and remedies provided by law or under this contract.

(End of clause)

52.203-12 LIMITATION ON PAYMENTS TO INFLUENCE CERTAIN FEDERAL TRANSACTIONS (JUN 1997)

(a) Definitions.

"Agency," as used in this clause, means executive agency as defined in 2.101.

"Covered Federal action," as used in this clause, means any of the following Federal actions:

(1) The awarding of any Federal contract.

(2) The making of any Federal grant.

(3) The making of any Federal loan.

(4) The entering into of any cooperative agreement.

(5) The extension, continuation, renewal, amendment, or modification of any Federal contract, grant, loan, or cooperative agreement.

"Indian tribe" and "tribal organization," as used in this clause, have the meaning provided in section 4 of the Indian Self-Determination and Education Assistance Act (25 U.S.C. 450B) and include Alaskan Natives.

"Influencing or attempting to influence," as used in this clause, means making, with the intent to influence, any communication to or appearance before an officer or employee of any agency, a Member of Congress, an officer or employee of Congress, or an employee of a Member of Congress in connection with any covered Federal action.

"Local government," as used in this clause, means a unit of government in a State and, if chartered, established, or otherwise recognized by a State for the performance of a governmental duty, including a local public authority, a special district, an intrastate district, a council of governments, a sponsor group representative organization, and any other instrumentality of a local government.

"Officer or employee of an agency," as used in this clause, includes the following individuals who are employed by an agency:

(1) An individual who is appointed to a position in the Government under title 5, United States Code, including a position under a temporary appointment.

(2) A member of the uniformed services, as defined in subsection 101(3), title 37, United States Code.

(3) A special Government employee, as defined in section 202, title 18, United States Code.

(4) An individual who is a member of a Federal advisory committee, as defined by the Federal Advisory Committee Act, title 5, United States Code, appendix 2.

"Person," as used in this clause, means an individual, corporation, company, association, authority, firm, partnership, society, State, and local government, regardless of whether such entity is operated for profit, or not for profit. This term excludes an Indian tribe, tribal organization, or any other Indian organization with respect to expenditures specifically permitted by other Federal law.

"Reasonable compensation," as used in this clause, means, with respect to a regularly employed officer or employee of any person, compensation that is consistent with the normal compensation for such officer or employee for work that is not furnished to, not funded by, or not furnished in cooperation with the Federal Government.

"Reasonable payment," as used in this clause, means, with respect to professional and other technical services, a payment in an amount that is consistent with the amount normally paid for such services in the private sector.

"Recipient," as used in this clause, includes the Contractor and all subcontractors. This term excludes an Indian tribe, tribal organization, or any other Indian organization with respect to expenditures specifically permitted by other Federal law.

"Regularly employed," as used in this clause, means, with respect to an officer or employee of a person requesting or receiving a Federal contract, an officer or employee who is employed by such person for at least 130 working days within 1 year immediately preceding the date of the submission that initiates agency consideration of such person for receipt of such contract. An officer or employee who is employed by such person for less than 130 working days within 1 year immediately preceding the date of the submission that

initiates agency consideration of such person shall be considered to be regularly employed as soon as he or she is employed by such person for 130 working days.

"State," as used in this clause, means a State of the United States, the District of Columbia, the Commonwealth of Puerto Rico, a territory or possession of the United States, an agency or instrumentality of a State, and multi-State, regional, or interstate entity having governmental duties and powers.

(b) Prohibitions.

(1) Section 1352 of title 31, United States Code, among other things, prohibits a recipient of a Federal contract, grant, loan, or cooperative agreement from using appropriated funds to pay any person for influencing or attempting to influence an officer or employee of any agency, a Member of Congress, an officer or employee of Congress, or an employee of a Member of Congress in connection with any of the following covered Federal actions: the awarding of any Federal contract; the making of any Federal grant; the making of any Federal loan; the entering into of any cooperative agreement; or the modification of any Federal contract, grant, loan, or cooperative agreement.

(2) The Act also requires Contractors to furnish a disclosure if any funds other than Federal appropriated funds (including profit or fee received under a covered Federal transaction) have been paid, or will be paid, to any person for influencing or attempting to influence an officer or employee of any agency, a Member of Congress, an officer or employee of Congress, or an employee of a Member of Congress in connection with a Federal contract, grant, loan, or cooperative agreement.

(3) The prohibitions of the Act do not apply under the following conditions:

(i) Agency and legislative liaison by own employees.

(A) The prohibition on the use of appropriated funds, in subparagraph (b)(1) of this clause, does not apply in the case of a payment of reasonable compensation made to an officer or employee of a person requesting or receiving a covered Federal action if the payment is for agency and legislative liaison activities not directly related to a covered Federal action.

(B) For purposes of subdivision (b)(3)(i)(A) of this clause, providing any information specifically requested by an agency or Congress is permitted at any time.

(C) The following agency and legislative liaison activities are permitted at any time where they are not related to a specific solicitation for any covered Federal action:

(1) Discussing with an agency the qualities and characteristics (including individual demonstrations) of the person's products or services, conditions or terms of sale, and service capabilities.

(2) Technical discussions and other activities regarding the application or adaptation of theperson's products or services for an agency's use.

(D) The following agency and legislative liaison activities are permitted where they are prior to formal solicitation of any covered Federal action--

(1) Providing any information not specifically requested but necessary for an agency to make an informed decision about initiation of a covered Federal action;

(2) Technical discussions regarding the preparation of an unsolicited proposal prior to its official submission; and

(3) Capability presentations by persons seeking awards from an agency pursuant to the provisions of the Small Business Act, as amended by Pub. L. 95-507, and subsequent amendments.

(E) Only those services expressly authorized by subdivision (b)(3)(i)(A) of this clause are permitted under this clause.

(ii) Professional and technical services.

(A) The prohibition on the use of appropriated funds, in subparagraph (b)(1) of this clause, does not apply in the case of--

(1) A payment of reasonable compensation made to an officer or employee of a person requesting or receiving a covered Federal action or an extension, continuation, renewal, amendment, or modification of a covered Federal action, if payment is for professional or technical services rendered directly in the preparation, submission, or negotiation of any bid, proposal, or application for that Federal action or for meeting requirements imposed by or pursuant to law as a condition for receiving that Federal action.

(2) Any reasonable payment to a person, other than an officer or employee of a person requesting or receiving a covered Federal action or an extension, continuation, renewal, amendment, or modification of a covered Federal action if the payment is for professional or technical services rendered directly in the preparation, submission, or negotiation of any bid, proposal, or application for that Federal action or for meeting requirements imposed by or pursuant to law as a condition for receiving that Federal action. Persons other than officers or employees of a person requesting or receiving a covered Federal action include consultants and trade associations.

(B) For purposes of subdivision (b)(3)(ii)(A) of this clause, "professional and technical services" shall be limited to advice and analysis directly applying any professional or technical discipline. For example, drafting of a legal document accompanying a bid or proposal by a lawyer is allowable. Similarly, technical advice provided by an engineer on the performance or operational capability of a piece of equipment rendered directly in the negotiation of a contract is allowable. However, communications with the intent to influence made by a professional (such as a licensed lawyer) or a technical person (such as a licensed accountant) are not allowable under this section unless they provide advice and analysis directly applying their professional or technical expertise and unless the advice or analysis is rendered directly and solely in the preparation, submission or negotiation of a covered Federal action. Thus, for example, communications with the intent to influence made by a lawyer that do not provide legal advice or analysis directly and solely related to the legal aspects of his or her client's proposal, but generally advocate one proposal over another are not allowable under this section because the lawyer is not providing professional legal services. Similarly, communications with the intent to influence made by an engineer providing an engineering analysis prior to the preparation or submission of a bid or proposal are not allowable under this section since the engineer is providing technical services but not directly in the preparation, submission or negotiation of a covered Federal action.

(C) Requirements imposed by or pursuant to law as a condition for receiving a covered Federal award include those required by law or regulation and any other requirements in the actual award documents.

(D) Only those services expressly authorized by subdivisions (b)(3)(ii)(A)(1) and (2) of this clause are permitted under this clause.

(E) The reporting requirements of FAR 3.803(a) shall not apply with respect to payments of reasonable compensation made to regularly employed officers or employees of a person.

(c) Disclosure.

(1) The Contractor who requests or receives from an agency a Federal contract shall file with that agency a disclosure form, OMB standard form LLL, Disclosure of Lobbying Activities, if such person has made or has agreed to make any payment using nonappropriated funds (to include profits from any covered Federal action), which would be prohibited under subparagraph (b)(1) of this clause, if paid for with appropriated funds.

(2) The Contractor shall file a disclosure form at the end of each calendar quarter in which there occurs any event that materially affects the accuracy of the information contained in any disclosure form previously filed by such person under subparagraph (c)(1) of this clause. An event that materially affects the accuracy of the information reported includes--

(i) A cumulative increase of $25,000 or more in the amount paid or expected to be paid for influencing or attempting to influence a covered Federal action; or

(ii) A change in the person(s) or individual(s) influencing or attempting to influence a covered Federal action; or

(iii) A change in the officer(s), employee(s), or Member(s) contacted to influence or attempt to influence a covered Federal action.

(3) The Contractor shall require the submittal of a certification, and if required, a disclosure form by any person who requests or receives any subcontract exceeding $100,000 under the Federal contract.

(4) All subcontractor disclosure forms (but not certifications) shall be forwarded from tier to tier until received by the prime Contractor. The prime Contractor shall submit all disclosures to the Contracting Officer at the end of the calendar quarter in which the disclosure form is submitted by the subcontractor. Each subcontractor certification shall be retained in the subcontract file of the awarding Contractor.

(d) Agreement. The Contractor agrees not to make any payment prohibited by this clause.

(e) Penalties.

(1) Any person who makes an expenditure prohibited under paragraph (a) of this clause or who fails to file or amend the disclosure form to be filed or amended by paragraph (b) of this clause shall be subject to civil penalties as provided for by 31 U.S.C. 1352. An imposition of a civil penalty does not prevent the Government from seeking any other remedy that may be applicable.

(2) Contractors may rely without liability on the representation made by their subcontractors in the certification and disclosure form.

(f) Cost allowability. Nothing in this clause makes allowable or reasonable any costs which would otherwise be unallowable or unreasonable. Conversely, costs made specifically unallowable by the requirements in this clause will not be made allowable under any other provision.

(End of clause)

52.204-4 PRINTING/COPYING DOUBLE-SIDED ON RECYCLED PAPER (JUN 1996)

(a) In accordance with Executive Order 12873, dated October 20, 1993, as amended by Executive Order 12995, dated March 25, 1996, the Offeror/Contractor is encouraged to submit paper documents, such as offers, letters, or reports, that are printed/copied double-sided on recycled paper that has at least 20 percent postconsumer material.

(b) The 20 percent standard applies to high-speed copier paper, offset paper, forms bond, computer printout paper, carbonless paper, file folders, white woven envelopes, and other uncoated printed and writing paper, such as writing and office paper, book paper, cotton fiber paper, and cover stock. An alternative to meeting the 20 percent postconsumer material standard is 50 percent recovered material content of certain industrial by-products.

52.209-6 PROTECTING THE GOVERNMENT'S INTEREST WHEN SUBCONTRACTING WITH

CONTRACTORS DEBARRED, SUSPENDED, OR PROPOSED FOR DEBARMENT. (JUL 1995)

(a) The Government suspends or debars Contractors to protect the Government's interests. The Contractor shall not enter into any subcontract in excess of the $25,000 with a Contractor that is debarred, suspended, or proposed for debarment unless there is a compelling reason to do so.

(b) The Contractor shall require each proposed first-tier subcontractor, whose subcontract will exceed $25,000, to disclose to the Contractor, in writing, whether as of the time of award of the subcontract, the subcontractor, or its principles, is or is not debarred, suspended, or proposed for debarment by the Federal Government.

(c) A corporate officer or a designee of the Contractor shall notify the Contracting Officer, in writing, before entering into a subcontract with a party that is debarred, suspended, or proposed for debarment (see FAR 9.404 for information on the List of Parties Excluded from Federal Procurement and Nonprocurement Programs). The notice must include the following:

(1) The name of the subcontractor.

(2) The Contractor's knowledge of the reasons for the subcontractor being on the List of Parties Excluded from Federal Procurement and Nonprocurement Programs.

(3) The compelling reason(s) for doing business with the subcontractor notwithstanding its inclusion on the List of Parties Excluded from Federal Procurement and Nonprocurement Programs.

(4) The systems and procedures the Contractor has established to ensure that it is fully protecting the Government's interests when dealing with such subcontractor in view of the specific basis for the party's debarment, suspension, or proposed debarment.

52.211-15 DEFENSE PRIORITY AND ALLOCATION REQUIREMENTS (SEP 1990)

This is a rated order certified for national defense use, and the Contractor shall follow all the requirements of the Defense Priorities and Allocations System regulation (15 CFR 700).

(End of clause)

52.215-2 AUDIT AND RECORDS--NEGOTIATION (JUN 1999)

(a) As used in this clause, "records" includes books, documents, accounting procedures and practices, and other data, regardless of type and regardless of whether such items are in written form, in the form of computer data, or in any other form.

(b) Examination of costs. If this is a cost-reimbursement, incentive, time-and-materials, labor-hour, or price redeterminable contract, or any combination of these, the Contractor shall maintain and the Contracting Officer, or an authorized representative of the Contracting Officer, shall have the right to examine and audit all records and other evidence sufficient to reflect properly all costs claimed to have been incurred or anticipated to be incurred directly or indirectly in performance of this contract. This right of examination shall include inspection at all reasonable times of the Contractor's plants, or parts of them, engaged in performing the contract.

(c) Cost or pricing data. If the Contractor has been required to submit cost or pricing data in connection with any pricing action relating to this contract, the Contracting Officer, or an authorized representative of the Contracting Officer, in order to evaluate the accuracy, completeness, and currency of the cost or pricing

data, shall have the right to examine and audit all of the Contractor's records, including computations and projections, related to--

(1) The proposal for the contract, subcontract, or modification;

(2) The discussions conducted on the proposal(s), including those related to negotiating;

(3) Pricing of the contract, subcontract, or modification; or

(4) Performance of the contract, subcontract or modification.

(d) Comptroller General--(1) The Comptroller General of the United States, or an authorized representative, shall have access to and the right to examine any of the Contractor's directly pertinent records involving transactions related to this contract or a subcontract hereunder.

(2) This paragraph may not be construed to require the Contractor or subcontractor to create or maintain any record that the Contractor or subcontractor does not maintain in the ordinary course of business or pursuant to a provision of law.

(e) Reports. If the Contractor is required to furnish cost, funding, or performance reports, the Contracting Officer or an authorized representative of the Contracting Officer shall have the right to examine and audit the supporting records and materials, for the purpose of evaluating (1) the effectiveness of the Contractor's policies and procedures to produce data compatible with the objectives of these reports and (2) the data reported.

(f) Availability. The Contractor shall make available at its office at all reasonable times the records, materials, and other evidence described in paragraphs (a), (b), (c), (d), and (e) of this clause, for examination, audit, or reproduction, until 3 years after final payment under this contract or for any shorter period specified in Subpart 4.7, Contractor Records Retention, of the Federal Acquisition Regulation (FAR), or for any longer period required by statute or by other clauses of this contract. In addition--

(1) If this contract is completely or partially terminated, the Contractor shall make available the records relating to the work terminated until 3 years after any resulting final termination settlement; and

(2) The Contractor shall make available records relating to appeals under the Disputes clause or to litigation or the settlement of claims arising under or relating to this contract until such appeals, litigation, or claims are finally resolved.

(g) The Contractor shall insert a clause containing all the terms of this clause, including this paragraph (g), in all subcontracts under this contract that exceed the simplified acquisition threshold, and--

(1) That are cost-reimbursement, incentive, time-and-materials, labor-hour, or price-redeterminable type or any combination of these;

(2) For which cost or pricing data are required; or

(3) That require the subcontractor to furnish reports as discussed in paragraph (e) of this clause.

The clause may be altered only as necessary to identify properly the contracting parties and the Contracting Officer under the Government prime contract.

(End of clause)

52.215-11 PRICE REDUCTION FOR DEFECTIVE COST OR PRICING DATA--MODIFICATIONS (OCT 1997)

(a) This clause shall become operative only for any modification to this contract involving a pricing adjustment expected to exceed the threshold for submission of cost or pricing data at FAR 15.403-4, except that this clause does not apply to any modification if an exception under FAR 15.403-1 applies.

(b) If any price, including profit or fee, negotiated in connection with any modification under this clause, or any cost reimbursable under this contract, was increased by any significant amount because (1) the Contractor or a subcontractor furnished cost or pricing data that were not complete, accurate, and current as certified in its Certificate of Current Cost or Pricing Data, (2) a subcontractor or prospective subcontractor furnished the Contractor cost or pricing data that were not complete, accurate, and current as certified in the Contractor's Certificate of Current Cost or Pricing Data, or (3) any of these parties furnished data of any description that were not accurate, the price or cost shall be reduced accordingly and the contract shall be modified to reflect the reduction. This right to a price reduction is limited to that resulting from defects in data relating to modifications for which this clause becomes operative under paragraph (a) of this clause.

(c) Any reduction in the contract price under paragraph (b) of this clause due to defective data from a prospective subcontractor that was not subsequently awarded the subcontract shall be limited to the amount, plus applicable overhead and profit markup, by which--

(1) The actual subcontract; or

(2) The actual cost to the Contractor, if there was no subcontract, was less than the prospective subcontract cost estimate submitted by the Contractor; provided, that the actual subcontract price was not itself affected by defective cost or pricing data.

(d)(1) If the Contracting Officer determines under paragraph (b) of this clause that a price or cost reduction should be made, the Contractor agrees not to raise the following matters as a defense:

(i) The Contractor or subcontractor was a sole source supplier or otherwise was in a superior bargaining position and thus the price of the contract would not have been modified even if accurate, complete, and current cost or pricing data had been submitted.

(ii) The Contracting Officer should have known that the cost or pricing data in issue were defective even though the Contractor or subcontractor took no affirmative action to bring the character of the data to the attention of the Contracting Officer.

(iii) The contract was based on an agreement about the total cost of the contract and there was no agreement about the cost of each item procured under the contract.

(iv) The Contractor or subcontractor did not submit a Certificate of Current Cost or Pricing Data.

(2)(i) Except as prohibited by subdivision (d)(2)(ii) of this clause, an offset in an amount determined appropriate by the Contracting Officer based upon the facts shall be allowed against the amount of a contract price reduction if--

(A) The Contractor certifies to the Contracting Officer that, to the best of the Contractor's knowledge and belief, the Contractor is entitled to the offset in the amount requested; and

(B) The Contractor proves that the cost or pricing data were available before the ``as of'' date specified on its Certificate of Current Cost or Pricing Data, and that the data were not submitted before such date.

(ii) An offset shall not be allowed if--

(A) The understated data were known by the Contractor to be understated before the ``as of'' date specified on its Certificate of Current Cost or Pricing Data; or

(B) The Government proves that the facts demonstrate that the contract price would not have increased in the amount to be offset even if the available data had been submitted before the ``as of'' date specified on its Certificate of Current Cost or Pricing Data.

(e) If any reduction in the contract price under this clause reduces the price of items for which payment was made prior to the date of the modification reflecting the price reduction, the Contractor shall be liable to and shall pay the United States at the time such overpayment is repaid--

(1) Simple interest on the amount of such overpayment to be computed from the date(s) of overpayment to the Contractor to the date the Government is repaid by the Contractor at the applicable underpayment rate effective for each quarter prescribed by the Secretary of the Treasury under 26 U.S.C. 6621(a)(2); and

A penalty equal to the amount of the overpayment, if the Contractor or subcontractor knowingly submitted cost or pricing data that were incomplete, inaccurate, or noncurrent.

52.215-13 SUBCONTRACTOR COST OR PRICING DATA--MODIFICATIONS (OCT 1997)

(a) The requirements of paragraphs (b) and (c) of this clause shall--

(1) Become operative only for any modification to this contract involving a pricing adjustment expected to exceed the threshold for submission of cost or pricing data at FAR 15.403-4; and

(2) Be limited to such modifications.

(b) Before awarding any subcontract expected to exceed the threshold for submission of cost or pricing data at FAR 15.403-4, on the date of agreement on price or the date of award, whichever is later; or before pricing any subcontract modification involving a pricing adjustment expected to exceed the threshold for submission of cost or pricing data at FAR 15.403-4, the Contractor shall require the subcontractor to submit cost or pricing data (actually or by specific identification in writing), unless an exception under FAR 15.403-1 applies.

(c) The Contractor shall require the subcontractor to certify in substantially the form prescribed in FAR 15.406-2 that, to the best of its knowledge and belief, the data submitted under paragraph (b) of this clause were accurate, complete, and current as of the date of agreement on the negotiated price of the subcontract or subcontract modification.

The Contractor shall insert the substance of this clause, including this paragraph (d), in each subcontract that exceeds the threshold for submission of cost or pricing data at FAR 15.403-4 on the date of agreement on price or the date of award, whichever is later.

52.215-21 REQUIREMENTS FOR COST OR PRICING DATA OR INFORMATION OTHER THAN COST OR PRICING DATA--MODIFICATIONS (OCT 1997)

(a) Exceptions from cost or pricing data. (1) In lieu of submitting cost or pricing data for modifications under this contract, for price adjustments expected to exceed the threshold set forth at FAR 15.403-4 on the date of the agreement on price or the date of the award, whichever is later, the Contractor may submit a written request for exception by submitting the information described in the following subparagraphs. The Contracting Officer may require additional supporting information, but only to the extent necessary to determine whether an exception should be granted, and whether the price is fair and reasonable--

(i) Identification of the law or regulation establishing the price offered. If the price is controlled under law

by periodic rulings, reviews, or similar actions of a governmental body, attach a copy of the controlling document, unless it was previously submitted to the contracting office.

(ii) Information on modifications of contracts or subcontracts for commercial items. (A) If--

(1) The original contract or subcontract was granted an exception from cost or pricing data requirements because the price agreed upon was based on adequate price competition or prices set by law or regulation, or was a contract or subcontract for the acquisition of a commercial item; and

(2) The modification (to the contract or subcontract) is not exempted based on one of these exceptions, then the Contractor may provide information to establish that the modification would not change the contract or subcontract from a contract or subcontract for the acquisition of a commercial item to a contract or subcontract for the acquisition of an item other than a commercial item.

(B) For a commercial item exception, the Contractor shall provide, at a minimum, information on prices at which the same item or similar items have previously been sold that is adequate for evaluating the reasonableness of the price of the modification. Such information may include--

(1) For catalog items, a copy of or identification of the catalog and its date, or the appropriate pages for the offered items, or a statement that the catalog is on file in the buying office to which the proposal is being submitted. Provide a copy or describe current discount policies and price lists (published or unpublished), e.g., wholesale, original equipment manufacturer, or reseller. Also explain the basis of each offered price and its relationship to the established catalog price, including how the proposed price relates to the price of recent sales in quantities similar to the proposed quantities.

(2) For market-priced items, the source and date or period of the market quotation or other basis for market price, the base amount, and applicable discounts. In addition, describe the nature of the market.

(3) For items included on an active Federal Supply Service Multiple Award Schedule contract, proof that an exception has been granted for the schedule item.

(2) The Contractor grants the Contracting Officer or an authorized representative the right to examine, at any time before award, books, records, documents, or other directly pertinent records to verify any request for an exception under this clause, and the reasonableness of price. For items priced using catalog or market prices, or law or regulation , access does not extend to cost or profit information or other data relevant solely to the Contractor's determination of the prices to be offered in the catalog or marketplace.

(b) Requirements for cost or pricing data. If the Contractor is not granted an exception from the requirement to submit cost or pricing data, the following applies:

(1) The Contractor shall submit cost or pricing data and supporting attachments in accordance with Table 15-2 of FAR 15.408.

As soon as practicable after agreement on price, but before award (except for unpriced actions), the Contractor shall submit a Certificate of Current Cost or Pricing Data, as prescribed by FAR 15.406-2.

52.216-7 TM ALLOWABLE COST AND PAYMENT (APR 1998) -- ALTERNATE I (FEB 1997)

(a) Invoicing. The Government shall make payments to the Contractor when requested as work progresses, but (except for small business concerns) not more often than once every 2 weeks, in amounts determined to be allowable by the Contracting Officer in accordance with Subpart 31.2 of the Federal Acquisition Regulation (FAR) in effect on the date of this contract and the terms of this contract. The Contractor may submit to an authorized representative of the Contracting Officer, in such form and reasonable detail as the

representative may require, an invoice or voucher supported by a statement of the claimed allowable cost for performing this contract.

(b) Reimbursing costs. (1) For the purpose of reimbursing allowable costs (except as provided in subparagraph (2) below, with respect to pension, deferred profit sharing, and employee stock ownership plan contributions), the term "costs" includes only--

(i) Those recorded costs that, at the time of the request for reimbursement, the Contractor has paid by cash, check, or other form of actual payment for items or services purchased directly for the contract;

(ii) When the Contractor is not delinquent in paying costs of contract performance in the ordinary course of business, costs incurred, but not necessarily paid, for--

(A) Materials issued from the Contractor's inventory and placed in the production process for use on the contract;

(B) Direct labor;

(C) Direct travel;

(D) Other direct in-house costs; and

(E) Properly allocable and allowable indirect costs, as shown in the records maintained by the Contractor for purposes of obtaining reimbursement under Government contracts; and

(iii) The amount of progress and other payments to the Contractor's subcontractors that either have been paid, or that the Contractor is required to pay pursuant to the clause of this contract entitled ``Prompt Payment for Construction Contracts.'' Payments shall be made by cash, check, or other form of payment to the Contractor's subcontractors under similar cost standards.

(2) Contractor contributions to any pension or other postretirement benefit, profit-sharing or employee stock ownership plan funds that are paid quarterly or more often may be included in indirect costs for payment purposes; Provided, that the Contractor pays the contribution to the fund within 30 days after the close of the period covered. Payments made 30 days or more after the close of a period shall not be included until the Contractor actually makes the payment. Accrued costs for such contributions that are paid less often than quarterly shall be excluded from indirect costs for payment purposes until the Contractor actually makes the payment.

(3) Notwithstanding the audit and adjustment of invoices or vouchers under paragraph (g) below, allowable indirect costs under this contract shall be obtained by applying indirect cost rates established in accordance with paragraph (d) below.

(4) Any statements in specifications or other documents incorporated in this contract by reference designating performance of services or furnishing of materials at the Contractor's expense or at no cost to the Government shall be disregarded for purposes of cost-reimbursement under this clause.

(c) Small business concerns. A small business concern may be paid more often than every 2 weeks and may invoice and be paid for recorded costs for items or services purchased directly for the contract, even though the concern has not yet paid for those items or services.

(d) Final indirect cost rates. (1) Final annual indirect cost rates and the appropriate bases shall be established in accordance with Subpart 42.7 of the Federal Acquisition Regulation (FAR) in effect for the period covered by the indirect cost rate proposal.

(2) The Contractor shall, within 90 days after the expiration of each of its fiscal years, or by a later date approved by the Contracting Officer, submit to the cognizant Contracting Officer responsible for

negotiating its final indirect cost rates and, if required by agency procedures, to the cognizant audit activity proposed final indirect cost rates for that period and supporting cost data specifying the contract and/or subcontract to which the rates apply. The proposed rates shall be based on the Contractor's actual cost experience for that period. The appropriate Government representative and Contractor shall establish the final indirect cost rates as promptly as practical after receipt of the Contractor's proposal.

(3) The Contractor and the appropriate Government representative shall execute a written understanding setting forth the final indirect cost rates. The understanding shall specify (i) the agreed-upon final annual indirect cost rates, (ii) the bases to which the rates apply, (iii) the periods for which the rates apply, (iv) any specific indirect cost items treated as direct costs in the settlement, and (v) the affected contract and/or subcontract, identifying any with advance agreements or special terms and the applicable rates. The understanding shall not change any monetary ceiling, contract obligation, or specific cost allowance or disallowance provided for in this contract. The understanding is incorporated into this contract upon execution.

(4) Within 120 days after settlement of the final indirect cost rates covering the year in which this contract is physically complete (or longer, if approved in writing by the Contracting Officer), the Contractor shall submit a completion invoice or voucher to reflect the settled amounts and rates.

(5) Failure by the parties to agree on a final annual indirect cost rate shall be a dispute within the meaning of the Disputes clause.

(e) Billing rates. Until final annual indirect cost rates are established for any period, the Government shall reimburse the Contractor at billing rates established by the Contracting Officer or by an authorized representative (the cognizant auditor), subject to adjustment when the final rates are established. These billing rates--

(1) Shall be the anticipated final rates; and

(2) May be prospectively or retroactively revised by mutual agreement, at either party's request, to prevent substantial overpayment or underpayment.

(f) Quick-closeout procedures. Quick-closeout procedures are applicable when the conditions in FAR 42.708(a) are satisfied.

(g) Audit. At any time or times before final payment, the Contracting Officer may have the Contractor's invoices or vouchers and statements of cost audited. Any payment may be (1) reduced by amounts found by the Contracting Officer not to constitute allowable costs or (2) adjusted for prior overpayments or underpayments.

(h) Final payment. (1) Upon approval of a completion invoice or voucher submitted by the Contractor in accordance with paragraph (d)(4) of this clause, and upon the Contractor's compliance with all terms of this contract, the Government shall promptly pay any balance of allowable costs and that part of the fee (if any) not previously paid.

(2) The Contractor shall pay to the Government any refunds, rebates, credits, or other amounts (including interest, if any) accruing to or received by the Contractor or any assignee under this contract, to the extent that those amounts are properly allocable to costs for which the Contractor has been reimbursed by the Government. Reasonable expenses incurred by the Contractor for securing refunds, rebates, credits, or other amounts shall be allowable costs if approved by the Contracting Officer. Before final payment under this contract, the Contractor and each assignee whose assignment is in effect at the time of final payment shall execute and deliver--

(i) An assignment to the Government, in form and substance satisfactory to the Contracting Officer, of refunds, rebates, credits, or other amounts (including interest, if any) properly allocable to costs for which the Contractor has been reimbursed by the Government under this contract; and

(ii) A release discharging the Government, its officers, agents, and employees from all liabilities, obligations, and claims arising out of or under this contract, except--

(A) Specified claims stated in exact amounts, or in estimated amounts when the exact amounts are not known;

(B) Claims (including reasonable incidental expenses) based upon liabilities of the Contractor to third parties arising out of the performance of this contract; provided, that the claims are not known to the Contractor on the date of the execution of the release, and that the Contractor gives notice of the claims in writing to the Contracting Officer within 6 years following the release date or notice of final payment date, whichever is earlier; and

(C) Claims for reimbursement of costs, including reasonable incidental expenses, incurred by the Contractor under the patent clauses of this contract, excluding, however, any expenses arising from the Contractor's indemnification of the Government against patent liability.

(End of clause)

52.216-18 ORDERING. (OCT 1995)

(a) Any supplies and services to be furnished under this contract shall be ordered by issuance of delivery orders or task orders by the individuals or activities designated in the Schedule. Such orders may be issued from date of award through the contract expiration.
(b) All delivery orders or task orders are subject to the terms and conditions of this contract. In the event of conflict between a delivery order or task order and this contract, the contract shall control.

(c) If mailed, a delivery order or task order is considered "issued" when the Government deposits the order in the mail. Orders may be issued orally, by facsimile, or by electronic commerce methods only if authorized in the Schedule.

52.216-19 ORDER LIMITATIONS. (OCT 1995)

(a) Minimum order. When the Government requires supplies or services covered by this contract in an amount of less than $2,500.00, the Government is not obligated to purchase, nor is the Contractor obligated to furnish, those supplies or services under the contract.

(b) Maximum order. The Contractor is not obligated to honor:

(1) Any order for a single item in excess of $7,400,000.00;

(2) Any order for a combination of items in excess of $7,400,000.00; or

(3) A series of orders from the same ordering office within 0 days that together call for quantities exceeding the limitation in subparagraph (1) or (2) above.

(c) If this is a requirements contract (i.e., includes the Requirements clause at subsection 52.216-21 of the Federal Acquisition Regulation (FAR)), the Government is not required to order a part of any one requirement from the Contractor if that requirement exceeds the maximum-order limitations in paragraph (b) above.

(d) Notwithstanding paragraphs (b) and (c) above, the Contractor shall honor any order exceeding the maximum order limitations in paragraph (b), unless that order (or orders) is returned to the ordering office within 3 days after issuance, with written notice stating the Contractor's intent not to ship the item (or items) called for and the reasons. Upon receiving this notice, the Government may acquire the supplies or

services from another source.

(End of clause)

52.216-22 INDEFINITE QUANTITY. (OCT 1995)

(a) This is an indefinite-quantity contract for the supplies or services specified, and effective for the period stated, in the Schedule. The quantities of supplies and services specified in the Schedule are estimates only and are not purchased by this contract.

(b) Delivery or performance shall be made only as authorized by orders issued in accordance with the Ordering clause. The Contractor shall furnish to the Government, when and if ordered, the supplies or services specified in the Schedule up to and including the quantity designated in the Schedule as the "maximum". The Government shall order at least the quantity of supplies or services designated in the Schedule as the "minimum".

(c) Except for any limitations on quantities in the Order Limitations clause or in the Schedule, there is no limit on the number of orders that may be issued. The Government may issue orders requiring delivery to multiple destinations or performance at multiple locations.

(d) Any order issued during the effective period of this contract and not completed within that period shall be completed by the Contractor within the time specified in the order. The contract shall govern the Contractor's and Government's rights and obligations with respect to that order to the same extent as if the order were completed during the contract's effective period; provided, that the Contractor shall not be required to make any deliveries under this contract after the contract expiration date.

(End of clause)

52.217-8 SVC OPTION TO EXTEND SERVICES (NOV 1999)

The Government may require continued performance of any services within the limits and at the rates specified in contract. These rates may be adjusted only as a result of revisions to prevailing labor rates provided by the Secretary of Labor. The option provision may be exercised more than once, but the total extension of performance hereunder shall not exceed 6 months. The Contracting Officer may exercise the option by written notice to the Contractor, at anytime, on or before 1 year after award of the basic contract, option year 1 and option year 2, respectively.

(End of clause)

52.217-9 OPTION TO EXTEND THE TERM OF THE CONTRACT (NOV 1999)

(a) The Government may extend the term of this contract by written notice to the Contractor prior to the contract expiration; provided that the Government gives the Contractor a preliminary written notice of its intent to extend at least 60 days before the contract expires. The preliminary notice does not commit the Government to an extension.

(b) If the Government exercises this option, the extended contract shall be considered to include this option provision.

(c) The total duration of this contract, including the exercise of any options under this clause, shall not exceed 3 years.
(End of clause)

~~52.219-3 NOTICE OF TOTAL HUBZONE SET-ASIDE (JAN 1999)~~

~~**(a) Definition. HUBZone small business concern, as used in this clause, means a small business concern that appears on the List of Qualified HUBZone Small Business Concerns maintained by the Small Business Administration.**~~

~~**(b) General. (1) Offers are solicited only from HUBZone small business concerns. Offers received from concerns that are not HUBZone small business concerns shall not be considered.**~~

~~**(2) Any award resulting from this solicitation will be made to a HUBZone small business concern.**~~

~~**(c) Agreement. A HUBZone small business concern agrees that in the performance of the contract, in the case of a contract for--**~~

~~**(1) Services (except construction), at least 50 percent of the cost of personnel for contract performance will be spent for employees of the concern or employees of other HUBZone small business concerns;**~~

~~**(2) Supplies (other than acquisition from a nonmanufacturer of the supplies), at least 50 percent of the cost of manufacturing, excluding the cost of materials, will be performed by the concern or other HUBZone small business concerns;**~~

~~**(3) General construction, at least 15 percent of the cost of the contract performance incurred for personnel will be spent on the concern's employees or the employees of other HUBZone small business concerns; or**~~

~~**(4) Construction by special trade contractors, at least 25 percent of the cost of the contract performance incurred for personnel will be spent on the concern's employees or the employees of other HUBZone small business concerns.**~~

~~**(d) A HUBZone joint venture agrees that, in the performance of the contract, the applicable percentage specified in paragraph (c) of this clause will be performed by the HUBZone small business participant or participants.**~~

~~**(e) A HUBZone small business concern nonmanufacturer agrees to furnish in performing this contract only end items manufactured or produced by HUBZone small business manufacturer concerns. This paragraph does not apply in connection with construction or service contracts.**~~

~~**(End of clause)**~~

52.219-4 NOTICE OF PRICE EVALUATION PREFERENCE FOR HUBZONE SMALL BUSINESS CONCERNS (JAN 1999)

(a) Definition. HUBZone small business concern, as used in this clause, means a small business concern that appears on the List of Qualified HUBZone Small Business Concerns maintained by the Small Business Administration.

(b) Evaluation preference. (1) Offers will be evaluated by adding a factor of 10 percent to the price of all offers, except--

(i) Offers from HUBZone small business concerns that have not waived the evaluation preference;

(ii) Otherwise successful offers from small business concerns;

(iii) Otherwise successful offers of eligible products under the Trade Agreements Act when the dollar threshold for application of the Act is exceeded (see 25.402 of the Federal Acquisition Regulation (FAR)); and

(iv) Otherwise successful offers where application of the factor would be inconsistent with a Memorandum of Understanding or other international agreement with a foreign government.

(2) The factor of 10 percent shall be applied on a line item basis or to any group of items on which award may be made. Other evaluation factors described in the solicitation shall be applied before application of the factor.

(3) A concern that is both a HUBZone small business concern and a small disadvantaged business concern will receive the benefit of both the HUBZone small business price evaluation preference and the small disadvantaged business price evaluation adjustment (see FAR clause 52.219-23). Each applicable price evaluation preference or adjustment shall be calculated independently against an offeror's base offer.

These individual preference amounts shall be added together to arrive at the total evaluated price for that offer.

(c) Waiver of evaluation preference. A HUBZone small business concern may elect to waive the evaluation preference, in which case the factor will be added to its offer for evaluation purposes. The agreements in paragraph (d) of this clause do not apply if the offeror has waived the evaluation preference.

{time} Offeror elects to waive the evaluation preference.

(d) Agreement. A HUBZone small business concern agrees that in the performance of the contract, in the case of a contract for

(1) Services (except construction), at least 50 percent of the cost of personnel for contract performance will be spent for employees of the concern or employees of other HUBZone small business concerns;

(2) Supplies (other than procurement from a nonmanufacturer of such supplies), at least 50 percent of the cost of manufacturing, excluding the cost of materials, will be performed by the concern or other HUBZone small business concerns;

(3) General construction, at least 15 percent of the cost of the contract performance incurred for personnel will be will be spent on the concern's employees or the employees of other HUBZone small business concerns; or

(4) Construction by special trade contractors, at least 25 percent of the cost of the contract performance incurred for personnel will be spent on the concern's employees or the employees of other HUBZone small business concerns.

(e) A HUBZone joint venture agrees that in the performance of the contract, the applicable percentage specified in paragraph (d) of this clause will be performed by the HUBZone small business participant or participants.

(f) A HUBZone small business concern nonmanufacturer agrees to furnish in performing this contract only end items manufactured or produced by HUBZone small business manufacturer concerns. This paragraph does not apply in connection with construction or service contracts.

(End of clause)

52.219-8 UTILIZATION OF SMALL BUSINESS CONCERNS (OCT 1999)

(a) It is the policy of the United States that small business concerns, HUBZone small business concerns, small business concerns owned and controlled by socially and economically disadvantaged individuals, and small business concerns owned and controlled by women shall have the maximum practicable opportunity to participate in performing contracts let by any Federal agency, including contracts and subcontracts for

subsystems, assemblies, components, and related services for major systems. It is further the policy of the United States that its prime contractors establish procedures to ensure the timely payment of amounts due pursuant to the terms of their subcontracts with small business concerns, HUBZone small business concerns, small business concerns owned and controlled by socially and economically disadvantaged individuals, and small business concerns owned and controlled by women.

(b) The Contractor hereby agrees to carry out this policy in the awarding of subcontracts to the fullest extent consistent with efficient contract performance. The Contractor further agrees to cooperate in any studies or surveys as may be conducted by the United States Small Business Administration or the awarding agency of the United States as may be necessary to determine the extent of the Contractor's compliance with this clause.

(c) Definitions. As used in this contract (1) Small business concern means a small business as defined pursuant to section 3 of the Small Business Act and relevant regulations promulgated pursuant thereto.

(2) HUBZone small business concern means a small business concern that appears on the List of Qualified HUBZone Small Business Concerns maintained by the Small Business Administration.

(3) Small business concern owned and controlled by socially and economically disadvantaged individuals and small disadvantaged business concern mean a small business concern that represents, as part of its offer that--

(i) It has received certification as a small disadvantaged business concern consistent with 13 CFR 124, Subpart B;

(ii) No material change in disadvantaged ownership and control has occurred since its certification;

(iii) Where the concern is owned by one or more individuals, the net worth of each individual upon whom the certification is based does not exceed $750,000 after taking into account the applicable exclusions set forth at 13 CFR 124.104(c)(2); and

(iv) It is identified, on the date of its representation, as a certified small disadvantaged business in the database maintained by the Small Business Administration (PRO-Net).

(4) Small business concern owned and controlled by women means a small business concern--

(i) Which is at least 51 percent owned by one or more women, or, in the case of any publicly owned business, at least 51 percent of the stock of which is owned by one or more women; and

(ii) Whose management and daily business operations are controlled by one or more women.

(d) Contractors acting in good faith may rely on written representations by their subcontractors regarding their status as a small business concern, a HUBZone small business concern, a small business concern owned and controlled by socially and economically disadvantaged individuals, or a small business concern owned and controlled by women.

(End of clause)

52.219-9 SMALL, SMALL DISADVANTAGED AND WOMEN-OWNED SMALL BUSINESS SUBCONTRACTING PLAN (OCT 1999)--ALTERNATE I (JAN 1999).

(a) This clause does not apply to small business concerns.

(b) "Commercial product," as used in this clause, means a product in regular production that is sold in substantial quantities to the general public and/or industry at established catalog or market prices. It also means a product which, in the opinion of the Contracting Officer, differs only insignificantly from the

Contractor's commercial product.

"Subcontract," as used in this clause, means any agreement (other than one involving an employer-employee relationship) entered into by a Federal Government prime Contractor or subcontractor calling for supplies or services required for performance of the contract or subcontract.

(c) Proposals submitted in response to this solicitation shall include a subcontracting plan that separately addresses subcontracting with small business, HUBZone small business, small disadvantaged business, and women-owned small business concerns. If the offeror is submitting an individual contract plan, the plan must separately address subcontracting with small business, HUBZone small business, small disadvantaged business, and women-owned small business concerns, with a separate part for the basic contract and separate parts for each option (if any). The plan shall be included in and made a part of the resultant contract. The subcontracting plan shall be negotiated within the time specified by the Contracting Officer. Failure to submit and negotiate a subcontracting plan shall make the offeror ineligible for award of a contract.

(d) The offeror's subcontracting plan shall include the following:

(1) Goals, expressed in terms of percentages of total planned subcontracting dollars, for the use of small business, HUBZone small business, small disadvantaged business, and women-owned small business concerns as subcontractors. The offeror shall include all subcontracts that contribute to contract performance, and may include a proportionate share of products and services that are normally allocated as indirect costs.

(2) A statement of--

(i) Total dollars planned to be subcontracted;

(ii) Total dollars planned to be subcontracted to small business concerns;

(iii) Total dollars planned to be subcontracted to HUBZone small business concerns;

(iv) Total dollars planned to be subcontracted to small disadvantaged business concerns; and

(v) Total dollars planned to be subcontracted to women-owned small business concerns.

(3) A description of the principal types of supplies and services to be subcontracted, and an identification of the types planned for subcontracting to--

(i) Small business concerns;

(ii) HUBZone small business concerns;

(iii) Small disadvantaged business concerns; and

(iv) Women-owned small business concerns.

(4) A description of the method used to develop the subcontracting goals in paragraph (d)(1) of this clause.

(5) A description of the method used to identify potential sources for solicitation purposes (e.g., existing company source lists, the Procurement Marketing and Access Network (PRO-Net) of the Small Business Administration (SBA), the National Minority Purchasing Council Vendor Information Service, the Research and Information Division of the Minority Business Development Agency in the Department of Commerce, or small, HUBZone, small disadvantaged, and women-owned small business trade associations). A firm may rely on the information contained in PRO-Net as an accurate representation of a concern's size and ownership characteristics for the purposes of maintaining a small, HUBZone, small

disadvantaged and women-owned small business source list. Use of PRO-Net as its source list does not relieve a firm of its responsibilities (e.g., outreach, assistance, counseling, or publicizing subcontracting opportunities) in this clause.

(6) A statement as to whether or not the offeror in included indirect costs in establishing subcontracting goals, and a description of the method used to determine the proportionate share of indirect costs to be incurred with—

(i) Small business concerns;

(ii) HUBZone small business concerns;

(iii) Small disadvantaged business concerns; and

(iv) Women-owned small business concerns.

(7) The name of the individual employed by the offeror who will administer the offeror's subcontracting program, and a description of the duties of the individual.

(8) A description of the efforts the offeror will make to assure that small business, HUBZone small business, small disadvantaged and women-owned small business concerns have an equitable opportunity to compete for subcontracts.

(9) Assurances that the offeror will include the clause of this contract entitled "Utilization of Business Concerns" in all subcontracts that offer further subcontracting opportunities, and that the offeror will require all subcontractors (except small business concerns) who receive subcontracts in excess of $500,000 ($1,000,000 for construction of any public facility) to adopt a plan similar to the plan agreed to by the offeror.

(10) Assurances that the offeror will (i) cooperate in any studies or surveys as may be required, (ii) submit periodic reports in order to allow the Government to determine the extent of compliance by the offeror with the subcontracting plan, (iii) submit Standard Form (SF) 294, Subcontracting Report for Individual Contracts, and/or SF 295, Summary Subcontract Report, in accordance with the instructions on the forms or as provided in agency regulations and in paragraph (j) of this clause; and (iv) ensure that its subcontractors agree to submit Standard Forms 294 and 295.

(11) A description of the types of records that will be maintained concerning procedures that have been adopted to comply with the requirements and goals in the plan, including establishing source lists; and a description of the offeror's efforts to locate small business, HUBZone small business, small disadvantaged business, and women-owned small business concerns and award subcontracts to them. The records shall include at least the following (on a plant-wide or company-wide basis, unless otherwise indicated)

(i) Source lists (e.g., PRO-Net), guides, and other data that identify small business, HUBZone small business, small disadvantaged business, and women-owned small business concerns.

(ii) Organizations contacted in an attempt to locate sources that are small business, HUBZone small business, small disadvantaged business, or women-owned small business concerns.

(iii) Records on each subcontract solicitation resulting in an award of more than $100,000, indicating--

(A) Whether small business concerns were solicited and, if not, why not;

(B) Whether HUBZone small business concerns were solicited and, if not, why not;

(C) Whether small disadvantaged business concerns were solicited and, if not, why not;

(D) Whether women-owned small business concerns were solicited and, if not, why not; and

(E) If applicable, the reason award was not made to a small business concern.

(iv) Records of any outreach efforts to contact--

(A) Trade associations;

(B) Business development organizations; and

(C) Conferences and trade fairs to locate small, HUBZone small, small disadvantaged, and women-owned small business sources.

(v) Records of internal guidance and encouragement provided to buyers through--

(A) Workshops, seminars, training, etc.; and

(B) Monitoring performance to evaluate compliance with the program's requirements.

(vi) On a contract-by-contract basis, records to support award data submitted by the offeror to the Government, including the name, address, and business size of each subcontractor. Contractors having commercial plans need not comply with this requirement.

(e) In order to effectively implement this plan to the extent consistent with efficient contract performance, the Contractor shall perform the following functions:

(1) Assist small business, HUBZone small business, small disadvantaged business, and women-owned small business concerns by arranging solicitations, time for the preparation of bids, quantities, specifications, and delivery schedules so as to facilitate the participation by such concerns. Where the Contractor's lists of potential small business, HUBZone small business, small disadvantaged business, and women-owned small business subcontractors are excessively long, reasonable effort shall be made to give all such small business concerns an opportunity to compete over a period of time.

(2) Provide adequate and timely consideration of the potentialities of small business, HUBZone small business, small disadvantaged business, and women-owned small business concerns in all ``make-or-buy'' decisions.

(3) Counsel and discuss subcontracting opportunities with representatives of small business, HUBZone small business, small disadvantaged business, and women-owned small business firms.

(4) Provide notice to subcontractors concerning penalties and remedies for misrepresentations of business status as small, HUBZone small, small disadvantaged, or women-owned small business for the purpose of obtaining a subcontract that is to be included as part or all of a goal contained in the Contractor's subcontracting plan.

(f) A master subcontracting plan on a plant or division-wide basis which contains all the elements required by paragraph (d) of this clause, except goals, may be incorporated by reference as a part of the subcontracting plan required of the offeror by this clause; provided, (1) the master plan has been approved, (2) the offeror ensures that the master plan is updated as necessary and provides copies of the approved master plan, including evidence of its approval, to the Contracting Officer, and (3) goals and any deviations from the master plan deemed necessary by the Contracting Officer to satisfy the requirements of this contract are set forth in the individual subcontracting plan.

(g)(1) If a commercial product is offered, the subcontracting plan required by this clause may relate to the offeror's production generally, for both commercial and noncommercial products, rather than solely to the Government contract. In these cases, the offeror shall, with the concurrence of the Contracting Officer,

submit one company-wide or division-wide annual plan.

(2) The annual plan shall be reviewed for approval by the agency awarding the offeror its first prime contract requiring a subcontracting plan during the fiscal year, or by an agency satisfactory to the Contracting Officer.

(3) The approved plan shall remain in effect during the offeror's fiscal year for all of the offeror's commercial products.

(h) Prior compliance of the offeror with other such subcontracting plans under previous contracts will be con-sidered by the Contracting Officer in determining the responsibility of the offeror for award of the contract.

(i) The failure of the Contractor or subcontractor to comply in good faith with (1) the clause of this contract entitled "Utilization Of Business Concerns," or (2) an approved plan required by this clause, shall be a material breach of the contract.

(j) The Contractor shall submit the following reports:

(1) Standard Form 294, Subcontracting Report for Individual Contracts. This report shall be submitted to the Contracting Officer semiannually and at contract completion. The report covers subcontract award data related to this contract. This report is not required for commercial plans.

(2) Standard Form 295, Summary Subcontract Report. This report encompasses all the contracts with the awarding agency. It must be submitted semi-annually for contracts with the Department of Defense and annually for contracts with civilian agencies. If the reporting activity is covered by a commercial plan, the reporting activity must report annually all subcontract awards under that plan. All reports submitted at the close of each fiscal year (both individual and commercial plans) shall include a breakout, in the Contractor's format, of subcontract awards, in whole dollars, to small disadvantaged business concerns by Standard Industrial Classification (SIC) Major Group. For a commercial plan, the Contractor may obtain from each of its subcontractors a predominant SIC Major Group and report all awards to that subcontractor under its predominant SIC Major Group.

(End of clause)

52.219-16 LIQUIDATED DAMAGES-SUBCONTRACTING PLAN (JAN 1999)

(a) Failure to make a good faith effort to comply with the subcontracting plan, as used in this clause, means a willful or intentional failure to perform in accordance with the requirements of the subcontracting plan approved under the clause in this contract entitled "Small Business Subcontracting Plan," or willful or intentional action to frustrate the plan.

(b) Performance shall be measured by applying the percentage goals to the total actual subcontracting dollars or, if a commercial plan is involved, to the pro rata share of actual subcontracting dollars attributable to Government contracts covered by the commercial plan. If, at contract completion or, in the case of a commercial plan, at the close of the fiscal year for which the plan is applicable, the Contractor has failed to meet its subcontracting goals and the Contracting Officer decides in accordance with paragraph (c) of this clause that the Contractor failed to make a good faith effort to comply with its subcontracting plan, established in accordance with the clause in this contract entitled ``Small Business Subcontracting Plan," the Contractor shall pay the Government liquidated damages in an amount stated. The amount of probable damages attributable to the Contractor's failure to comply shall be an amount equal to the actual dollar amount by which the Contractor failed to achieve each subcontract goal.

(c) Before the Contracting Officer makes a final decision that the Contractor has failed to make such good faith effort, the Contracting Officer shall give the Contractor written notice specifying the failure and permitting the Contractor to demonstrate what good faith efforts have been made and to discuss the matter.

Failure to respond to the notice may be taken as an admission that no valid explanation exists. If, after consideration of all the pertinent data, the Contracting Officer finds that the Contractor failed to make a good faith effort to comply with the subcontracting plan, the Contracting Officer shall issue a final decision to that effect and require that the Contractor pay the Government liquidated damages as provided in paragraph (b) of this clause.

(d) With respect to commercial plans, the Contracting Officer who approved the plan will perform the functions of the Contracting Officer under this clause on behalf of all agencies with contracts covered by the commercial plan.

(e) The Contractor shall have the right of appeal, under the clause in this contract entitled Disputes, from any final decision of the Contracting Officer.

(f) Liquidated damages shall be in addition to any other remedies that the Government may have.

(End of clause)

52.219-25 SMALL DISADVANTAGED BUSINESS PARTICIPATION PROGRAM—DISADVANTAGED STATUS AND REPORTING (OCT 1999)

(a) Disadvantaged status for joint venture partners, team members, and subcontractors. This clause addresses disadvantaged status for joint venture partners, teaming arrangement members, and subcontractors and is applicable if this contract contains small disadvantaged business (SDB) participation targets. The Contractor shall obtain representations of small disadvantaged status from joint venture partners, teaming arrangement members, and subcontractors through use of a provision substantially the same as paragraph (b)(1)(i) of the provision at FAR 52.219-22, Small Disadvantaged Business Status. The Contractor shall confirm that a joint venture partner, team member, or subcontractor representing itself as a small disadvantaged business concern, is identified as a certified small disadvantaged business in the database maintained by the Small Business Administration (PRO-Net) or by contacting the SBA's Office of Small Disadvantaged Business Certification and Eligibility.

(b) Reporting requirement. If this contract contains SDB participation targets, the Contractor shall report on the participation of SDB concerns at contract completion, or as otherwise provided in this contract. Reporting may be on Optional Form 312, Small Disadvantaged Business Participation Report, or in the Contractor's own format providing the same information. This report is required for each contract containing SDB participation targets. If this contract contains an individual Small, Small Disadvantaged and Women-Owned Small Business Subcontracting Plan, reports may be submitted with the final Subcontracting Report for Individual Contracts (Standard Form 294) at the completion of the contract.

(End of clause)

52.222-3 CONVICT LABOR (AUG 1996)

The Contractor agrees not to employ in the performance of this contract any person undergoing a sentence of imprisonment which has been imposed by any court of a State, the District of Columbia, the Commonwealth of Puerto Rico, the Virgin Islands, Guam, American Samoa, the Commonwealth of the Northern Mariana Islands, or the Trust Territory of the Pacific Islands. This limitation, however, shall not prohibit the employment by the Contractor in the performance of this contract of persons on parole or probation to work at paid employment during the term of their sentence or persons who have been pardoned or who have served their terms. Nor shall it prohibit the employment by the Contractor in the performance of this contract of persons confined for violation of the laws of any of the States, the District of Columbia, the Commonwealth of Puerto Rico, the Virgin Islands, Guam, American Samoa, the Commonwealth of the Northern Mariana Islands, or the Trust Territory of the Pacific Islands who are authorized to work at paid employment in the community under the laws of such jurisdiction, if--

(a)(1) The worker is paid or is in an approved work training program on a voluntary basis ;

(2) Representatives of local union central bodies or similar labor union organizations have been consulted;

(3) Such paid employment will not result in the displacement of employed workers, or be applied in skills, crafts, or trades in which there is a surplus of available gainful labor in the locality, or impair existing contracts for services; and

(4) The rates of pay and other conditions of employment will not be less than those paid or provided for work of a similar nature in the locality in which the work is being performed; and

(b) The Attorney General of the United States has certified that the work-release laws or regulations of the jurisdiction involved are in conformity with the requirements of Executive Order 11755, as amended by Executive Orders 12608 and 12943.

(End of clause)

52.222-4 C CONTRACT WORK HOURS AND SAFETY STANDARDS ACT - OVERTIME COMPENSATION. (JUL 1995)

(a) Overtime requirements. No Contractor or subcontractor contracting for any part of the contract work which may require or involve the employment of laborers or mechanics (see Federal Acquisition Regulation (FAR) 22.300) shall require or permit any such laborers or mechanics in any workweek in which the individual is employed on such work to work in excess of 40 hours in such workweek unless such laborer or mechanic receives compensation at a rate not less than 1 1/2 times the basic rate of pay for all hours worked in excess of 40 hours in such workweek.

(b) Violation; liability for unpaid wages; liquidated damages. In the event of any violation of the provisions set forth in paragraph (a) of this clause, the Contractor and any subcontractor responsible therefor shall be liable for the unpaid wages. In addition, such Contractor and subcontractor shall be liable to the United States (in the case of work done under contract for the District of Columbia or a territory, to such District or to such territory), for liquidated damages. Such liquidated damages shall be computed with respect to each individual laborer or mechanics employed in violation of the provisions set forth in paragraph (a) of this clause in the sum of $10 for each calendar day on which such individual was required or permitted to work in excess of the standard workweek of 40 hours without payment of the overtime wages required by provisions set forth in paragraph (a) of this clause.

(c) Withholding for unpaid wages and liquidated damages. The Contracting Officer shall upon his or her own action or upon written request of an authorized representative of the Department of Labor withhold or cause to be withheld, from any moneys payable on account of work performed by the Contractor or subcontractor under any such contract or any other Federal contract with the same Prime Contractor, or any other Federally-assisted contract subject to the Contract Work Hours and Safety Standards Act which is held by the same Prime Contractor, such sums as may be determined to be necessary to satisfy any liabilities of such Contractor or subcontractor for unpaid wages and liquidated damages as provided in the provisions set forth in paragraph (b) of this clause.

(d) Payrolls and basic records. (1) The Contractor or subcontractor shall maintain payrolls and basic payroll records during the course of contract work and shall preserve them for a period of 3 years from the completion of the contract for all laborers and mechanics working on the contract. Such records shall contain the name and address of each such employee, social security number, correct classifications, hourly rates of wages paid, daily and weekly number of hours worked, deductions made, and actual wages paid. Nothing in this paragraph shall require the duplication of records required to be maintained for construction work by Department of Labor regulations at 29 CFR 5.5(a)(3) implementing the Davis-Bacon Act.

(2) The records to be maintained under paragraph (d)(1) of this clause shall be made available by the Contractor or subcontractor for inspection, copying, or transcription by authorized representatives of the

Contracting Officer or the Department of Labor. The Contractor or subcontractor shall permit such representatives to interview employees during working hours on the job.

(e) Subcontracts. The Contractor or subcontractor shall insert in any subcontracts exceeding $100,000 the provisions set forth in paragraphs (a) through (e) of this clause and also a clause requiring the subcontractors to include these provisions in any lower tier subcontracts. The Prime Contractor shall be responsible for compliance by any subcontractor or lower tier subcontractor with the provisions set forth in paragraphs (a) through (e) of this clause.

52.222-6 C DAVIS-BACON ACT (FEB 1995)

(a) All laborers and mechanics employed or working upon the site of the work will be paid unconditionally and not less often than once a week, and without subsequent deduction or rebate on any account (except such payroll deductions as are permitted by regulations issued by the Secretary of Labor under the Copeland Act (29 CFR Part 3), the full amount of wages and bona fide fringe benefits (or cash equivalents thereof) due at time of payment computed at rates not less than those contained in the wage determination of the Secretary of Labor which is attached hereto and made a part hereof, regardless of any contractual relationship which may be alleged to exist between the Contractor and such laborers and mechanics. Contributions made or costs reasonably anticipated for bona fide fringe benefits under section 1(b)(2) of the Davis-Bacon Act on behalf of laborers or mechanics are considered wages paid to such laborers or mechanics, subject to the provisions of paragraph (d) of this clause; also, regular contributions made or costs incurred for more than a weekly period (but not less often than quarterly) under plans, funds, or programs which cover the particular weekly period, are deemed to be constructively made or incurred during such period. Such laborers and mechanics shall be paid not less than the appropriate wage rate and fringe benefits in the wage determination for the classification of work actually performed, without regard to skill, except as provided in the clause entitled Apprentices and Trainees. Laborers or mechanics performing work in more than one classification may be compensated at the rate specified for each classification for the time actually worked therein; provided, That the employer's payroll records accurately set forth the time spent in each classification in which work is performed. The wage determination (including any additional classifications and wage rates conformed under paragraph (b) of this clause) and the Davis-Bacon poster (WH-1321) shall be posted at all times by the Contractor and its subcontractors at the site of the work in a prominent and accessible place where it can be easily seen by the workers.

(b)(1) The Contracting Officer shall require that any class of laborers or mechanics which is not listed in the wage determination and which is to be employed under the contract shall be classified in conformance with the wage determination. The Contracting Officer shall approve an additional classification and wage rate and fringe benefits therefor only when all the following criteria have been met:

(i) The work to be performed by the classification requested is not performed by a classification in the wage determination.

(ii) The classification is utilized in the area by the construction industry.

(iii) The proposed wage rate, including any bona fide fringe benefits, bears a reasonable relationship to the wage rates contained in the wage determination.

(2) If the Contractor and the laborers and mechanics to be employed in the classification (if known), or their representatives, and the Contracting Officer agree on the classification and wage rate (including the amount designated for fringe benefits, where appropriate), a report of the action taken shall be sent by the Contracting Officer to the Administrator of the Wage and Hour Division, Employment Standards Administration, U.S. Department of Labor, Washington, DC 20210. The Administrator or an authorized representative will approve, modify, or disapprove every additional classification action within 30 days of receipt and so advise the Contracting Officer or will notify the Contracting Officer within the 30-day period that additional time is necessary.

(3) In the event the Contractor, the laborers or mechanics to be employed in the classification, or their representatives, and the Contracting Officer do not agree on the proposed classification and wage rate (including the amount designated for fringe benefits, where appropriate), the Contracting Officer shall refer the questions, including the views of all interested parties and the recommendation of the Contracting Officer, to the Administrator of the Wage and Hour Division for determination. The Administrator, or an authorized representative, will issue a determination within 30 days of receipt and so advise the Contracting Officer or will notify the Contracting Officer within the 30-day period that additional time is necessary.

(4) The wage rate (including fringe benefits, where appropriate) determined pursuant to subparagraphs (b)(2) and (b)(3) of this clause shall be paid to all workers performing work in the classification under this contract from the first day on which work is performed in the classification.

(c) Whenever the minimum wage rate prescribed in the contract for a class of laborers or mechanics includes a fringe benefit which is not expressed as an hourly rate, the Contractor shall either pay the benefit as stated in the wage determination or shall pay another bona fide fringe benefit or an hourly cash equivalent thereof.

(d) If the Contractor does not make payments to a trustee or other third person, the Contractor may consider as part of the wages of any laborer or mechanic the amount of any costs reasonably anticipated in providing bona fide fringe benefits under a plan or program; provided, That the Secretary of Labor has found, upon the written request of the Contractor, that the applicable standards of the Davis-Bacon Act have been met. The Secretary of Labor may require the Contractor to set aside in a separate account assets for the meeting of obligations under the plan or program.

52.222-7 C WITHHOLDING OF FUNDS (FEB 1988)

The Contracting Officer shall, upon his or her own action or upon written request of an authorized representative of the Department of Labor, withhold or cause to be withheld from the Contractor under this contract or any other Federal contract with the same Prime Contractor, or any other Federally assisted contract subject to Davis-Bacon prevailing wage requirements, which is held by the same Prime Contractor, so much of the accrued payments or advances as may be considered necessary to pay laborers and mechanics, including apprentices, trainees, and helpers, employed by the Contractor or any subcontractor the full amount of wages required by the contract. In the event of failure to pay any laborer or mechanic, including any apprentice, trainee, or helper, employed or working on the site of the work, all or part of the wages required by the contract, the Contracting Officer may, after written notice to the Contractor, take such action as may be necessary to cause the suspension of any further payment, advance, or guarantee of funds until such violations have ceased.

52.222-8 C PAYROLLS AND BASIC RECORDS (FEB 1988)

(a) Payrolls and basic records relating thereto shall be maintained by the Contractor during the course of the work and preserved for a period of 3 years thereafter for all laborers and mechanics working at the site of the work. Such records shall contain the name, address, and social security number of each such worker, his or her correct classification, hourly rates of wages paid (including rates of contributions or costs anticipated for bona fide fringe benefits or cash equivalents thereof of the types described in section 1(b)(2)(B) of the Davis-Bacon Act), daily and weekly number of hours worked, deductions made, and actual wages paid. Whenever the Secretary of Labor has found, under paragraph (d) of the clause entitled Davis-Bacon Act, that the wages of any laborer or mechanic include the amount of any costs reasonably anticipated in providing benefits under a plan or program described in section 1(b)(2)(B) of the Davis-Bacon Act, the Contractor shall maintain records which show that the commitment to provide such benefits is enforceable, that the plan or program is financially responsible, and that the plan or program has been communicated in writing to the laborers or mechanics affected, and records which show the costs anticipated or the actual cost incurred in providing such benefits. Contractors employing apprentices or trainees under approved programs shall maintain written evidence of the registration of apprenticeship

programs and certification of trainee programs, the registration of the apprentices and trainees, and the ratios and wage rates prescribed in the applicable programs.

(b)(1) The Contractor shall submit weekly for each week in which any contract work is performed a copy of all payrolls to the Contracting Officer. The payrolls submitted shall set out accurately and completely all of the information required to be maintained under paragraph (a) of this clause. This information may be submitted in any form desired. Optional Form WH-347 (Federal Stock Number 029-005-00014-1) is available for this purpose and may be purchased from the Superintendent of Documents, U.S. Government Printing Office, Washington, DC 20402. The Prime Contractor is responsible for the submission of copies of payrolls by all subcontractors.

(2) Each payroll submitted shall be accompanied by a "Statement of Compliance," signed by the Contractor or subcontractor or his or her agent who pays or supervises the payment of the persons employed under the contract and shall certify--

(i) That the payroll for the payroll period contains the information required to be maintained under paragraph (a) of this clause and that such information is correct and complete;

(ii) That each laborer or mechanic (including each helper, apprentice, and trainee) employed on the contract during the payroll period has been paid the full weekly wages earned, without rebate, either directly or indirectly, and that no deductions have been made either directly or indirectly from the full wages earned, other than permissible deductions as set forth in the Regulations, 29 CFR Part 3; and

(iii) That each laborer or mechanic has been paid not less than the applicable wage rates and fringe benefits or cash equivalents for the classification of work performed, as specified in the applicable wage determination incorporated into the contract.

(3) The weekly submission of a properly executed certification set forth on the reverse side of Optional Form WH-347 shall satisfy the requirement for submission of the "Statement of Compliance" required by subparagraph (b)(2) of this clause.

(4) The falsification of any of the certifications in this clause may subject the Contractor or subcontractor to civil or criminal prosecution under Section 1001 of Title 18 and Section 3729 of Title 31 of the United States Code.

(c) The Contractor or subcontractor shall make the records required under paragraph (a) of this clause available for inspection, copying, or transcription by the Contracting Officer or authorized representatives of the Contracting Officer or the Department of Labor. The Contractor or subcontractor shall permit the Contracting Officer or representatives of the Contracting Officer or the Department of Labor to interview employees during working hours on the job. If the Contractor or subcontractor fails to submit required records or to make them available, the Contracting Officer may, after written notice to the Contractor, take such action as may be necessary to cause the suspension of any further payment. Furthermore, failure to submit the required records upon request or to make such records available may be grounds for debarment action pursuant to 29 CFR 5.12.

52.222-9 C APPRENTICES AND TRAINEES (FEB 1988)

(a) Apprentices. Apprentices will be permitted to work at less than the predetermined rate for the work they performed when they are employed pursuant to and individually registered in a bona fide apprenticeship program registered with the U.S. Department of Labor, Employment and Training Administration, Bureau of Apprenticeship and Training, or with a State Apprenticeship Agency recognized by the Bureau, or if a person is employed in his or her first 90 days of probationary employment as an apprentice in such an apprenticeship program, who is not individually registered in the program, but who has been certified by the Bureau of Apprenticeship and Training or a State Apprenticeship Agency (where appropriate) to be eligible for probationary employment as an apprentice. The allowable ratio of

apprentices to journeymen on the job site in any craft classification shall not be greater than the ratio permitted to the Contractor as to the entire work force under the registered program. Any worker listed on a payroll at an apprentice wage rate, who is not registered or otherwise employed as stated in this paragraph, shall be paid not less than the applicable wage determination for the classification of work actually performed. In addition, any apprentice performing work on the job site in excess of the ratio permitted under the registered program shall be paid not less than the applicable wage rate on the wage determination for the work actually performed. Where a contractor is performing construction on a project in a locality other than that in which its program is registered, the ratios and wage rates (expressed in percentages of the journeyman's hourly rate) specified in the Contractor's or subcontractor's registered program shall be observed. Every apprentice must be paid at not less than the rate specified in the registered program for the apprentice's level of progress, expressed as a percentage of the journeyman hourly rate specified in the applicable wage determination. Apprentices shall be paid fringe benefits in accordance with the provisions of the apprenticeship program. If the apprenticeship program does not specify fringe benefits, apprentices must be paid the full amount of fringe benefits listed on the wage determination for the applicable classification. If the Administrator determines that a different practice prevails for the applicable apprentice classification, fringes shall be paid in accordance with that determination. In the event the Bureau of Apprenticeship and Training, or a State Apprenticeship Agency recognized by the Bureau, withdraws approval of an apprenticeship program, the Contractor will no longer be permitted to utilize apprentices at less than the applicable predetermined rate for the work performed until an acceptable program is approved.

(b) Trainees. Except as provided in 29 CFR 5.16, trainees will not be permitted to work at less than the predetermined rate for the work performed unless they are employed pursuant to and individually registered in a program which has received prior approval, evidenced by formal certification by the U.S. Department of Labor, Employment and Training Administration. The ratio of trainees to journeymen on the job site shall not be greater than permitted under the plan approved by the Employment and Training Administration. Every trainee must be paid at not less than the rate specified in the approved program for the trainee's level of progress, expressed as a percentage of the journeyman hourly rate specified in the applicable wage determination. Trainees shall be paid fringe benefits in accordance with the provisions of the trainee program. If the trainee program does not mention fringe benefits, trainees shall be paid the full amount of fringe benefits listed in the wage determination unless the Administrator of the Wage and Hour Division determines that there is an apprenticeship program associated with the corresponding journeyman wage rate in the wage determination which provides for less than full fringe benefits for apprentices. Any employee listed on the payroll at a trainee rate who is not registered and participating in a training plan approved by the Employment and Training Administration shall be paid not less than the applicable wage rate in the wage determination for the classification of work actually performed. In addition, any trainee performing work on the job site in excess of the ratio permitted under the registered program shall be paid not less than the applicable wage rate in the wage determination for the work actually performed. In the event the Employment and Training Administration withdraws approval of a training program, the Contractor will no longer be permitted to utilize trainees at less than the applicable predetermined rate for the work performed until an acceptable program is approved.

(c) Equal employment opportunity. The utilization of apprentices, trainees, and journeymen under this clause shall be in conformity with the equal employment opportunity requirements of Executive Order 11246, as amended, and 29 CFR Part 30.

52.222-10 C COMPLIANCE WITH COPELAND ACT REQUIREMENTS (FEB 1988)

The Contractor shall comply with the requirements of 29 CFR Part 3, which are hereby incorporated by reference in this contract.

52.222-11 C SUBCONTRACTS (LABOR STANDARDS (FEB 1988)

(a) The Contractor or subcontractor shall insert in any subcontracts the clauses entitled Davis-Bacon Act, Contract Work Hours and Safety Standards Act-Overtime Compensation, Apprentices and Trainees, Payrolls and Basic Records, Compliance with Copeland Act Requirements, Withholding of Funds, Subcontracts (Labor Standards), Contract Termination-Debarment, Disputes Concerning Labor Standards, Compliance with Davis-Bacon and Related Act Regulations, and Certification of Eligibility, and such other clauses as the Contracting Officer may, by appropriate instructions, require, and also a clause requiring subcontractors to include these clauses in any lower tier subcontracts. The Prime Contractor shall be responsible for compliance by any subcontractor or lower tier subcontractor with all the contract clauses cited in this paragraph.

(b)(1) Within 14 days after award of the contract, the Contractor shall deliver to the Contracting Officer a completed Statement and Acknowledgment Form (SF 1413) for each subcontract, including the subcontractor's signed and dated acknowledgment that the clauses set forth in paragraph (a) of this clause have been included in the subcontract.

(2) Within 14 days after the award of any subsequently awarded subcontract the Contractor shall deliver to the Contracting Officer an updated completed SF 1413 for such additional subcontract.

52.222-12 C CONTRACT TERMINATION--DEBARMENT (FEB 1988)

A breach of the contract clauses entitled Davis-Bacon Act, Contract Work Hours and Safety Standards Act--Overtime Compensation, Apprentices and Trainees, Payrolls and Basic Records, Compliance with Copeland Act Requirements, Subcontracts (Labor Standards), Compliance with Davis-Bacon and Related Act Regulations, or Certification of Eligibility may be grounds for termination of the contract, and for debarment as a Contractor and subcontractor as provided in 29 CFR 5.12.

52.222-13 C COMPLIANCE WITH DAVIS-BACON AND RELATED ACT REGULATIONS (FEB 1988)

All rulings and interpretations of the Davis-Bacon and Related Acts contained in 29 CFR Parts 1, 3, and 5 are hereby incorporated by reference in this contract.

52.222-14 C DISPUTES CONCERNING LABOR STANDARDS (FEB 1988)

The United States Department of Labor has set forth in 29 CFR Parts 5, 6, and 7 procedures for resolving disputes concerning labor standards requirements. Such disputes shall be resolved in accordance with those procedures and not the Disputes clause of this contract. Disputes within the meaning of this clause include disputes between the Contractor (or any of its subcontractors) and the contracting agency, the U.S. Department of Labor, or the employees or their representatives.

52.222-15 C CERTIFICATION OF ELIGIBILITY (FEB 1988)

(a) By entering into this contract, the Contractor certifies that neither it (nor he or she) nor any person or firm who has an interest in the Contractor's firm is a person or firm ineligible to be awarded Government contracts by virtue of section 3(a) of the Davis-Bacon Act or 29 CFR 5.12(a)(1).

(b) No part of this contract shall be subcontracted to any person or firm ineligible for award of a Government contract by virtue of section 3(a) of the Davis-Bacon Act or 29 CFR 5.12(a)(1).

(c) The penalty for making false statements is prescribed in the U.S. Criminal Code, 18 U.S.C. 1001.

52.222-21 PROHIBITION OF SEGREGATED FACILITIES (FEB 1999)

(a) Segregated facilities, as used in this clause, means any waiting rooms, work areas, rest rooms and wash rooms, restaurants and other eating areas, time clocks, locker rooms and other storage or dressing areas, parking lots, drinking fountains, recreation or entertainment areas, transportation, and housing facilities provided for employees, that are segregated by explicit directive or are in fact segregated on the basis of race, color, religion, sex, or national origin because of written or oral policies or employee custom. The term does not include separate or single-user rest rooms or necessary dressing or sleeping areas provided to assure privacy between the sexes.

(b) The Contractor agrees that it does not and will not maintain or provide for its employees any segregated facilities at any of its establishments, and that it does not and will not permit its employees to perform their services at any location under its control where segregated facilities are maintained. The Contractor agrees that a breach of this clause is a violation of the Equal Opportunity clause in this contract.

(c) The Contractor shall include this clause in every subcontract and purchase order that is subject to the Equal Opportunity clause of this contract.

(End of clause)

52.222-26 EQUAL OPPORTUNITY (FEB 1999)

(a) If, during any 12-month period (including the 12 months preceding the award of this contract), the Contractor has been or is awarded nonexempt Federal contracts and/or subcontracts that have an aggregate value in excess of $10,000, the Contractor shall comply with subparagraphs (b)(1) through (11) of this clause. Upon request, the Contractor shall provide information necessary to determine the applicability of this clause.

(b) During performing this contract, the Contractor agrees as follows:

(1) The Contractor shall not discriminate against any employee or applicant for employment because of race, color, religion, sex, or national origin. However, it shall not be a violation of this clause for the Contractor to extend a publicly announced preference in employment to Indians living on or near an Indian reservation, in connection with employment opportunities on or near an Indian reservation, as permitted by 41 CFR 60-1.5.

(2) The Contractor shall take affirmative action to ensure that applicants are employed, and that employees are treated during employment, without regard to their race, color, religion, sex, or national origin. This shall include, but not be limited to, (i) employment, (ii) upgrading, (iii) demotion, (iv) transfer, (v) recruitment or recruitment advertising, (vi) layoff or termination, (vii) rates of pay or other forms of compensation, and (viii) selection for training, including apprenticeship.

(3) The Contractor shall post in conspicuous places available to employees and applicants for employment the notices to be provided by the Contracting Officer that explain this clause.

(4) The Contractor shall, in all solicitations or advertisements for employees placed by or on behalf of the Contractor, state that all qualified applicants will receive consideration for employment without regard to race, color, religion, sex, or national origin.

(5) The Contractor shall send, to each labor union or representative of workers with which it has a collective bargaining agreement or other contract or understanding, the notice to be provided by the Contracting Officer advising the labor union or workers' representative of the Contractor's commitments under this clause, and post copies of the notice in conspicuous places available to employees and applicants for employment.

(6) The Contractor shall comply with Executive Order 11246, as amended, and the rules, regulations, and

orders of the Secretary of Labor.

(7) The Contractor shall furnish to the contracting agency all information required by Executive Order 11246, as amended, and by the rules, regulations, and orders of the Secretary of Labor. The Contractor shall also file Standard Form 100 (EEO-1), or any successor form, as prescribed in 41 CFR part 60-1. Unless the Contractor has filed within the 12 months preceding the date of contract award, the Contractor shall, within 30 days after contract award, apply to either the regional Office of Federal Contract Compliance Programs (OFCCP) or the local office of the Equal Employment Opportunity Commission for the necessary forms.

(8) The Contractor shall permit access to its premises, during normal business hours, by the contracting agency or the OFCCP for the purpose of conducting on-site compliance evaluations and complaint investigations. The Contractor shall permit the Government to inspect and copy any books, accounts, records (including computerized records), and other material that may be relevant to the matter under investigation and pertinent to compliance with Executive Order 11246, as amended, and rules and regulations that implement the Executive Order.

(9) If the OFCCP determines that the Contractor is not in compliance with this clause or any rule, regulation, or order of the Secretary of Labor, this contract may be canceled, terminated, or suspended in whole or in part and the Contractor may be declared ineligible for further Government contracts, under the procedures authorized in Executive Order 11246, as amended. In addition, sanctions may be imposed and remedies invoked against the Contractor as provided in Executive Order 11246, as amended; in the rules, regulations, and orders of the Secretary of Labor; or as otherwise provided by law.

(10) The Contractor shall include the terms and conditions of subparagraphs (b)(1) through (11) of this clause in every subcontract or purchase order that is not exempted by the rules, regulations, or orders of the Secretary of Labor issued under Executive Order 11246, as amended, so that these terms and conditions will be binding upon each subcontractor or vendor.

(11) The Contractor shall take such action with respect to any subcontract or purchase order as the contracting officer may direct as a means of enforcing these terms and conditions, including sanctions for noncompliance; provided, that if the Contractor becomes involved in, or is threatened with, litigation with a subcontractor or vendor as a result of any direction, the Contractor may request the United States to enter into the litigation to protect the interests of the United States.

(c) Notwithstanding any other clause in this contract, disputes relative to this clause will be governed by the procedures in 41 CFR 60-1.1.

52.222-27 C AFFIRMATIVE ACTION COMPLIANCE REQUIREMENTS FOR CONSTRUCTION (FEB 1999)

(a) Definitions. "Covered area," as used in this clause, means the geographical area described in the solicitation for this contract.

"Deputy Assistant Secretary," as used in this clause, means Deputy Assistant Secretary for Federal Contract Compliance, U.S. Department of Labor, or a designee.

"Employer's identification number," as used in this clause, means the Federal Social Security number used on the employer's quarterly federal tax return, U.S. Treasury Department Form 941.

"Minority," as used in this clause, means--

(1) American Indian or Alaskan Native (all persons having origins in any of the original peoples of North America and maintaining identifiable tribal affiliations through membership and participation or community identification).

(2) Asian and Pacific Islander (all persons having origins in any of the original peoples of the Far East, Southeast Asia, the Indian Subcontinent, or the Pacific Islands);

(3) Black (all persons having origins in any of the black African racial groups not of Hispanic origin); and

(4) Hispanic (all persons of Mexican, Puerto Rican, Cuban, Central or South American, or other Spanish culture or origin, regardless of race).

(b) If the Contractor, or a subcontractor at any tier, subcontracts a portion of the work involving any construction trade, each such subcontract in excess of $10,000 shall include this clause and the Notice containing the goals for minority and female participation stated in the solicitation for this contract.

(c) If the Contractor is participating in a Hometown Plan (41 CFR 60-4) approved by the U.S. Department of Labor in a covered area, either individually or through an association, its affirmative action obligations on all work in the plan area (including goals) shall comply with the plan for those trades that have unions participating in the plan. Contractors must be able to demonstrate participation in, and compliance with, the provisions of the plan. Each Contractor or subcontractor participating in an approved plan is also required to comply with its obligations under the Equal Opportunity clause, and to make a good faith effort to achieve each goal under the plan in each trade in which it has employees. The overall good-faith performance by other Contractors or subcontractors toward a goal in an approved plan does not excuse any Contractor's or subcontractor's failure to make good-faith efforts to achieve the plan's goals.

(d) The Contractor shall implement the affirmative action procedures in subparagraphs (g)(1) through (16) of this clause. The goals stated in the solicitation for this contract are expressed as percentages of the total hours of employment and training of minority and female utilization that the Contractor should reasonably be able to achieve in each construction trade in which it has employees in the covered area. If the Contractor performs construction work in a geographical area located outside of the covered area, it shall apply the goals established for the geographical area where that work is actually performed. The Contractor is expected to make substantially uniform progress toward its goals in each craft.

(e) Neither the terms and conditions of any collective bargaining agreement, nor the failure by a union with which the Contractor has a collective bargaining agreement, to refer minorities or women shall excuse the Contractor's obligations under this clause, Executive Order 11246, as amended, or the regulations thereunder.

(f) In order for the nonworking training hours of apprentices and trainees to be counted in meeting the goals, apprentices and trainees must be employed by the Contractor during the training period, and the Contractor must have made a commitment to employ the apprentices and trainees at the completion of their training, subject to the availability of employment opportunities. Trainees must be trained pursuant to training programs approved by the U.S. Department of Labor.

(g) The Contractor shall take affirmative action to ensure equal employment opportunity. The evaluation of the Contractor's compliance with this clause shall be based upon its effort to achieve maximum results from its actions. The Contractor shall document these efforts fully and implement affirmative action steps at least as extensive as the following:

(1) Ensure a working environment free of harassment, intimidation, and coercion at all sites and in all facilities where the Contractor's employees are assigned to work. The Contractor, if possible, will assign two or more women to each construction project. The Contractor shall ensure that foremen, superintendents, and other onsite supervisory personnel are aware of and carry out the Contractor's obligation to maintain such a working environment, with specific attention to minority or female individuals working at these sites or facilities.

(2) Establish and maintain a current list of sources for minority and female recruitment. Provide written notification to minority and female recruitment sources and community organizations when the Contractor

or its unions have employment opportunities available, and maintain a record of the organizations' responses.

(3) Establish and maintain a current file of the names, addresses, and telephone numbers of each minority and female off-the-street applicant, referrals of minorities or females from unions, recruitment sources, or community organizations, and the action taken with respect to each individual. If an individual was sent to the union hiring hall for referral and not referred back to the Contractor by the union or, if referred back, not employed by the
Contractor, this shall be documented in the file, along with whatever additional actions the Contractor may have taken.

(4) Immediately notify the Deputy Assistant Secretary when the union or unions with which the Contractor has a collective bargaining agreement has not referred back to the Contractor a minority or woman sent by the Contractor, or when the Contractor has other information that the union referral process has impeded the Contractor's efforts to meet its obligations.

(5) Develop on-the-job training opportunities and/or participate in training programs for the area that expressly include minorities and women, including upgrading programs and apprenticeship and trainee programs relevant to the Contractor's employment needs, especially those programs funded or approved by the Department of Labor. The Contractor shall provide notice of these programs to the sources compiled under subparagraph (g)(2) of this clause.

(6) Disseminate the Contractor's equal employment policy by--

(i) Providing notice of the policy to unions and to training, recruitment, and outreach programs, and requesting their cooperation in assisting the Contractor in meeting its contract obligations;

(ii) Including the policy in any policy manual and in collective bargaining agreements;

(iii) Publicizing the policy in the company newspaper, annual report, etc.;

(iv) Reviewing the policy with all management personnel and with all minority and female employees at least once a year; and

(v) Posting the policy on bulletin boards accessible to employees at each location where construction work is performed.

(7) Review, at least annually, the Contractor's equal employment policy and affirmative action obligations with all employees having responsibility for hiring, assignment, layoff, termination, or other employment decisions. Conduct review of this policy with all on-site supervisory personnel before initiating construction work at a job site. A written record shall be made and maintained identifying the time and place of these meetings, persons attending, subject matter discussed, and disposition of the subject matter.

(8) Disseminate the Contractor's equal employment policy externally by including it in any advertising in the news media, specifically including minority and female news media. Provide written notification to, and discuss this policy with, other Contractors and subcontractors with which the Contractor does or anticipates doing business.

(9) Direct recruitment efforts, both oral and written, to minority, female, and community organizations, to schools with minority and female students, and to minority and female recruitment and training organizations serving the Contractor's recruitment area and employment needs. Not later than 1 month before the date for acceptance of applications for apprenticeship or training by any recruitment source, send written notification to organizations such as the above, describing the openings, screening procedures, and tests to be used in the selection process.

(10) Encourage present minority and female employees to recruit minority persons and women. Where

reasonable, provide after-school, summer, and vacation employment to minority and female youth both on the site and in other areas of the Contractor's workforce.

(11) Validate all tests and other selection requirements where required under 41 CFR 60-3.

(12) Conduct, at least annually, an inventory and evaluation at least of all minority and female personnel for promotional opportunities. Encourage these employees to seek or to prepare for, through appropriate training, etc., opportunities for promotion.

(13) Ensure that seniority practices, job classifications, work assignments, and other personnel practices do not have a discriminatory effect by continually monitoring all personnel and employment-related activities to ensure that the Contractor's obligations under this contract are being carried out.

(14) Ensure that all facilities and company activities are nonsegregated except that separate or single-user rest rooms and necessary dressing or sleeping areas shall be provided to assure privacy between the sexes.

(15) Maintain a record of solicitations for subcontracts for minority and female construction contractors and suppliers, including circulation of solicitations to minority and female contractor associations and other business associations.

(16) Conduct a review, at least annually, of all supervisors' adherence to and performance under the Contractor's equal employment policy and affirmative action obligations.

(h) The Contractor is encouraged to participate in voluntary associations that may assist in fulfilling one or more of the affirmative action obligations contained in subparagraphs (g)(1) through (16) of this clause. The efforts of a contractor association, joint contractor-union, contractor-community, or similar group of which the contractor is a member and participant may be asserted as fulfilling one or more of its obligations under subparagraphs (g)(1) through (16) of this clause, provided the Contractor--

(1) Actively participates in the group;

(2) Makes every effort to ensure that the group has a positive impact on the employment of minorities and women in the industry;

(3) Ensures that concrete benefits of the program are reflected in the Contractor's minority and female workforce participation;

(4) Makes a good-faith effort to meet its individual goals and timetables; and

(5) Can provide access to documentation that demonstrates the effectiveness of actions taken on behalf of the Contractor. The obligation to comply is the Contractor's, and failure of such a group to fulfill an obligation shall not be a defense for the Contractor's noncompliance.

(i) A single goal for minorities and a separate single goal for women shall be established. The Contractor is required to provide equal employment opportunity and to take affirmative action for all minority groups, both male and female, and all women, both minority and nonminority. Consequently, the Contractor may be in violation of Executive Order 11246, as amended, if a particular group is employed in a substantially disparate manner.

(j) The Contractor shall not use goals or affirmative action standards to discriminate against any person because of race, color, religion, sex, or national origin.

(k) The Contractor shall not enter into any subcontract with any person or firm debarred from Government contracts under Executive Order 11246, as amended.

(l) The Contractor shall carry out such sanctions and penalties for violation of this clause and of the Equal

Opportunity clause, including suspension, termination, and cancellation of existing subcontracts, as may be imposed or ordered under Executive Order 11246, as amended, and its implementing regulations, by the OFCCP. Any failure to carry out these sanctions and penalties as ordered shall be a violation of this clause and Executive Order 11246, as amended.

(m) The Contractor in fulfilling its obligations under this clause shall implement affirmative action procedures at least as extensive as those prescribed in paragraph (g) of this clause, so as to achieve maximum results from its efforts to ensure equal employment opportunity. If the Contractor fails to comply with the requirements of Executive Order 11246, as amended, the implementing regulations, or this clause, the Deputy Assistant Secretary shall take action as prescribed in 41 CFR 60-4.8.

(n) The Contractor shall designate a responsible official to--

(1) Monitor all employment-related activity to ensure that the Contractor's equal employment policy is being carried out;

(2) Submit reports as may be required by the Government; and

(3) Keep records that shall at least include for each employee the name, address, telephone number, construction trade, union affiliation (if any), employee identification number, social security number, race, sex, status (e.g., mechanic, apprentice, trainee, helper, or laborer), dates of changes in status, hours worked per week in the indicated trade, rate of pay, and locations at which the work was performed. Records shall be maintained in an easily understandable and retrievable form; however, to the degree that existing records satisfy this requirement, separate records are not required to be maintained.

Nothing contained herein shall be construed as a limitation upon the application of other laws that establish different standards of compliance or upon the requirements for the hiring of local or other area residents (e.g., those under the Public Works Employment Act of 1977 and the Community Development Block Grant Program).

52.222-35 AFFIRMATIVE ACTION FOR DISABLED VETERANS AND VETERANS OF THE VIETNAM ERA (APR 1998)

(a)) Definitions. As used in this clause--

All employment openings includes all positions except executive and top management, those positions that will be filled from within the contractor's organization, and positions lasting 3 days or less. This term includes full-time employment, temporary employment of more than 3 days' duration, and part-time employment.

Appropriate office of the State employment service system means the local office of the Federal-State national system of public employment offices with assigned responsibility to serve the area where the employment opening is to be filled, including the District of Columbia, Guam, the Commonwealth of Puerto Rico, and the Virgin Islands.

Positions that will be filled from within the Contractor's organization means employment openings for which no consideration will be given to persons outside the Contractor's organization (including any affiliates, subsidiaries, and parent companies) and includes any openings that the Contractor proposes to fill from regularly established ``recall'' lists. The exception does not apply to a particular opening once an employer decides to consider applicants outside of its organization.

Veteran of the Vietnam era means a person who--

(1) Served on active duty for a period of more than 180 days, any part of which occurred between August 5, 1964, and May 7, 1975, and was discharged or released therefrom with other than a dishonorable discharge; or

(2) Was discharged or released from active duty for a service-connected disability if any part of such active duty was performed between August 5, 1964, and May 7, 1975.

(b) General. (1) Regarding any position for which the employee or applicant for employment is qualified, the Contractor shall not discriminate against the individual because the individual is a disabled veteran or a veteran of the Vietnam era. The Contractor agrees to take affirmative action to employ, advance in employment, and otherwise treat qualified disabled veterans and veterans of the Vietnam era without discrimination based upon their disability or veterans' status in all employment practices such as--

(i) Employment;

(ii) Upgrading;

(iii) Demotion or transfer;

(iv) Recruitment;

(v) Advertising;

(vi) Layoff or termination;

(vii) Rates of pay or other forms of compensation; and

(viii) Selection for training, including apprenticeship.

(2) The Contractor agrees to comply with the rules, regulations, and relevant orders of the Secretary of Labor (Secretary) issued under the Vietnam Era Veterans' Readjustment Assistance Act of 1972 (the Act), as amended.

(c) Listing openings. (1) The Contractor agrees to list all employment openings existing at contract award or occurring during contract performance, at an appropriate office of the State employment service system in the locality where the opening occurs. These openings include those occurring at any Contractor facility, including one not connected with performing this contract. An independent corporate affiliate is exempt from this requirement.

(2) State and local government agencies holding Federal contracts of $10,000 or more shall also list all their employment openings with the appropriate office of the State employment service.

(3) The listing of employment openings with the State employment service system is required at least concurrently with using any other recruitment source or effort and involves the obligations of placing a bona fide job order, including accepting referrals of veterans and nonveterans. This listing does not require hiring any particular job applicant or hiring from any particular group of job applicants and is not intended to relieve the Contractor from any requirements of Executive orders or regulations concerning nondiscrimination in employment.

(4) Whenever the Contractor becomes contractually bound to the listing terms of this clause, it shall advise the State employment service system, in each State where it has establishments, of the name and location of each hiring location in the State. As long as the Contractor is contractually bound to these terms and has so advised the State system, it need not advise the State system of subsequent contracts. The Contractor may advise the State system when it is no longer bound by this contract clause.

(d) Applicability. This clause does not apply to the listing of employment openings that occur and are filled outside the 50 States, the District of Columbia, the Commonwealth of Puerto Rico, Guam, and the Virgin Islands.

(e) Postings. (1) The Contractor agrees to post employment notices stating (i) the Contractor's obligation under the law to take affirmative action to employ and advance in employment qualified disabled veterans and veterans of the Vietnam era, and (ii) the rights of applicants and employees.

(2) These notices shall be posted in conspicuous places that are available to employees and applicants for employment. They shall be in a form prescribed by the Deputy Assistant Secretary for Federal Contract Compliance Programs, Department of Labor (Deputy Assistant Secretary), and provided by or through the Contracting Officer.

(3) The Contractor shall notify each labor union or representative of workers with which it has a collective bargaining agreement or other contract understanding, that the Contractor is bound by the terms of the Act, and is committed to take affirmative action to employ, and advance in employment, qualified disabled veterans and veterans of the Vietnam Era.

(f) Noncompliance. If the Contractor does not comply with the requirements of this clause, appropriate actions may be taken under the rules, regulations, and relevant orders of the Secretary issued pursuant to the Act.

(g) Subcontracts. The Contractor shall include the terms of this clause in every subcontract or purchase order of $10,000 or more unless exempted by rules, regulations, or orders of the Secretary. The Contractor shall act as specified by the Deputy Assistant Secretary to enforce the terms, including action for noncompliance.

(End of clause)

52.222-36 AFFIRMATIVE ACTION FOR WORKERS WITH DISABILITIES (JUN 1998)

(a) General. (1) Regarding any position for which the employee or applicant for employment is qualified, the Contractor shall not discriminate against any employee or applicant because of physical or mental disability. The Contractor agrees to take affirmative action to employ, advance in employment, and otherwise treat qualified individuals with disabilities without discrimination based upon their physical or mental disability in all employment practices such as--

(i) Recruitment, advertising, and job application procedures;

(ii) Hiring, upgrading, promotion, award of tenure, demotion, transfer, layoff, termination, right of return from layoff, and rehiring;

(iii) Rates of pay or any other form of compensation and changes in compensation;

(iv) Job assignments, job classifications, organizational structures, position descriptions, lines of progression, and seniority lists;

(v) Leaves of absence, sick leave, or any other leave;

(vi) Fringe benefits available by virtue of employment, whether or not administered by the Contractor;

(vii) Selection and financial support for training, including apprenticeships, professional meetings, conferences, and other related activities, and selection for leaves of absence to pursue training;

(viii) Activities sponsored by the Contractor, including social or recreational programs; and

(ix) Any other term, condition, or privilege of employment.

(2) The Contractor agrees to comply with the rules, regulations, and relevant orders of the Secretary of Labor (Secretary) issued under the Rehabilitation Act of 1973 (29 U.S.C. 793) (the Act), as amended.

(b) Postings. (1) The Contractor agrees to post employment notices stating--

(i) The Contractor's obligation under the law to take affirmative action to employ and advance in employment qualified individuals with disabilities; and

(ii) The rights of applicants and employees.

(2) These notices shall be posted in conspicuous places that are available to employees and applicants for employment. The Contractor shall ensure that applicants and employees with disabilities are informed of the contents of the notice (e.g., the Contractor may have the notice read to a visually disabled individual, or may lower the posted notice so that it might be read by a person in a wheelchair). The notices shall be in a form prescribed by the Deputy Assistant Secretary for Federal Contract Compliance of the U.S. Department of Labor (Deputy Assistant Secretary) and shall be provided by or through the Contracting Officer.

(3) The Contractor shall notify each labor union or representative of workers with which it has a collective bargaining agreement or other contract understanding, that the Contractor is bound by the terms of Section 503 of the Act and is committed to take affirmative action to employ, and advance in employment, qualified individuals with physical or mental disabilities.

(c) Noncompliance. If the Contractor does not comply with the requirements of this clause, appropriate actions may be taken under the rules, regulations, and relevant orders of the Secretary issued pursuant to the Act.

(d) Subcontracts. The Contractor shall include the terms of this clause in every subcontract or purchase order in excess of $10,000 unless exempted by rules, regulations, or orders of the Secretary. The Contractor shall act as specified by the Deputy Assistant Secretary to enforce the terms, including action for noncompliance.

(End of clause)

52.222-37 EMPLOYMENT REPORTS ON DISABLED VETERANS AND VETERANS OF THE VIETNAM ERA (JAN 1999)

(a) Unless the Contractor is a State or local government agency, the Contractor shall report at least annually, as required by the Secretary of Labor, on--

(1) The number of disabled veterans and the number of veterans of the Vietnam era in the workforce of the contractor by job category and hiring location; and

(2) The total number of new employees hired during the period covered by the report, and of that total, the number of disabled veterans, and the number of veterans of the Vietnam era.

(b) The above items shall be reported by completing the form entitled "Federal Contractor Veterans' Employment Report VETS-100."

(c) Reports shall be submitted no later than September 30 of each year beginning September 30, 1988.

(d) The employment activity report required by paragraph (a)(2) of this clause shall reflect total hires during the most recent 12-month period as of the ending date selected for the employment profile report required by paragraph (a)(1) of this clause. Contractors may select an ending date: (1) As of the end of any pay period during the period January through March 1st of the year the report is due, or (2) as of December 31, if the contractor has previous written approval from the Equal Employment Opportunity Commission to do so for purposes of submitting the Employer Information Report EEO-1 (Standard Form 100).

(e) The count of veterans reported according to paragraph (a) of this clause shall be based on voluntary disclosure. Each Contractor subject to the reporting requirements at 38 U.S.C. 4212 shall invite all disabled veterans and veterans of the Vietnam era who wish to benefit under the affirmative action program at 38 U.S.C. 4212 to identify themselves to the Contractor. The invitation shall state that the information is voluntarily provided; that the information will be kept confidential; that disclosure or refusal to provide the information will not subject the applicant or employee to any adverse treatment; and that the information will be used only in accordance with the regulations promulgated under 38 U.S.C. 4212.

(f) Subcontracts. The Contractor shall include the terms of this clause in every subcontract or purchase order of $10,000 or more unless exempted by rules, regulations, or orders of the Secretary.

(End of clause)

52.222-41 SVC SERVICE CONTRACT ACT OF 1965, AS AMENDED (MAY 1989)

(a) Definitions. "Act," as used in this clause, means the Service Contract Act of 1965, as amended (41 U.S.C. 351, et seq.).

"Contractor," as used in this clause or in any subcontract, shall be deemed to refer to the subcontractor, except in the term "Government Prime Contractor."

"Service employee," as used in this clause, means any person engaged in the performance of this contract other than any person employed in a bona fide executive, administrative, or professional capacity, as these terms are defined in Part 541 of Title 29, Code of Federal Regulations, as revised. It includes all such persons regardless of any contractual relationship that may be alleged to exist between a Contractor or subcontractor and such persons.

(b) Applicability. This contract is subject to the following provisions and to all other applicable provisions of the Act and regulations of the Secretary of Labor (29 CFR Part 4). This clause does not apply to contracts or subcontracts administratively exempted by the Secretary of Labor or exempted by 41 U.S.C. 356, as interpreted in Subpart C of 29 CFR Part 4.

(c) Compensation. (1) Each service employee employed in the performance of this contract by the Contractor or any subcontractor shall be paid not less than the minimum monetary wages and shall be furnished fringe benefits in accordance with the wages and fringe benefits determined by the Secretary of Labor, or authorized representative, as specified in any wage determination attached to this contract.

(2)(i) If a wage determination is attached to this con- tract, the Contractor shall classify any class of service employee which is not listed therein and which is to be employed under the contract (i.e., the work to be performed is not performed by any classification listed in the wage determination) so as to provide a reasonable relationship (i.e., appropriate level of skill comparison) between such unlisted classifications and the classifications listed in the wage determination. Such conformed class of employees shall be paid the monetary wages and furnished the fringe benefits as are determined pursuant to the procedures in this paragraph (c).

(ii) This conforming procedure shall be initiated by the Contractor prior to the performance of contract work by the unlisted class of employee. The Contractor shall submit Standard Form (SF) 1444, Request For Authorization of Additional Classification and Rate, to the Contracting Officer no later than 30 days after the unlisted class of employee performs any contract work. The Contracting Officer shall review the proposed classification and rate and promptly submit the completed SF 1444 (which must include information regarding the agreement or disagreement of the employees' authorized representatives or the employees themselves together with the agency recommendation), and all pertinent informa-tion to the Wage and Hour Division, Employment Standards Administration, U.S. Department of Labor. The Wage and Hour Division will approve, modify, or disapprove the action or render a final determination in the event of disagreement within 30 days of receipt or will notify the Contracting Officer within 30 days of receipt that additional time is necessary.

(iii) The final determination of the conformance action by the Wage and Hour Division shall be transmitted to the Contracting Officer who shall promptly notify the Contractor of the action taken. Each affected employee shall be furnished by the Contractor with a written copy of such determination or it shall be posted as a part of the wage determination.

(iv)(A) The process of establishing wage and fringe benefit rates that bear a reasonable relationship to those listed in a wage determination cannot be reduced to any single formula. The approach used may vary from wage determination to wage determination depending on the circumstances. Standard wage and salary administration practices which rank various job classifications by pay grade pursuant to point schemes or other job factors may, for example, be relied upon. Guidance may also be obtained from the way different jobs are rated under Federal pay systems (Federal Wage Board Pay System and the General Schedule) or from other wage determina- tions issued in the same locality. Basic to the establishment of any conformable wage rate(s) is the concept that a pay relationship should be maintained between job classifications based on the skill required and the duties performed.

(B) In the case of a contract modification, an exercise of an option, or extension of an existing contract, or in any other case where a Contractor succeeds a contract under which the classification in question was previously conformed pursuant to paragraph (c) of this clause, a new conformed wage rate and fringe benefits may be assigned to the conformed classification by indexing (i.e., adjusting) the previous conformed rate and fringe benefits by an amount equal to the average (mean) percentage increase (or decrease, where appropriate) between the wages and fringe benefits specified for all classifications to be used on the contract which are listed in the current wage determination, and those specified for the corresponding classifications in the previously applicable wage determination. Where conforming actions are accomplished in accordance with this paragraph prior to the performance of contract work by the unlisted class of employees, the Contractor shall advise the Contracting Officer of the action taken but the other procedures in subdivision (c)(2)(ii) of this clause need not be followed.

(C) No employee engaged in performing work on this contract shall in any event be paid less than the currently applicable minimum wage specified under section 6(a)(1) of the Fair Labor Standards Act of 1938, as amended.

(v) The wage rate and fringe benefits finally determined under this subparagraph (c)(2) of this clause shall be paid to all employees performing in the classification from the first day on which contract work is performed by them in the classification. Failure to pay the unlisted employees the compensation agreed upon by the interested parties and/or finally determined by the Wage and Hour Division retroactive to the date such class of employees commenced contract work shall be a violation of the Act and this contract.

(vi) Upon discovery of failure to comply with subparagraph (c)(2) of this clause, the Wage and Hour Division shall make a final determination of conformed classification, wage rate, and/or fringe benefits which shall be retroactive to the date such class or classes of employees commenced contract work.

(3) Adjustment of Compensation. If the term of this contract is more than 1 year, the minimum monetary wages and fringe benefits required to be paid or fur- nished thereunder to service employees under this contract shall be subject to adjustment after 1 year and not less often than once every 2 years, under wage determinations issued by the Wage and Hour Division.

(d) Obligation to Furnish Fringe Benefits. The Contractor or subcontractor may discharge the obligation to furnish fringe benefits specified in the attachment or determined under subparagraph (c)(2) of this clause by furnishing equivalent combinations of bona fide fringe benefits, or by making equivalent or differential cash payments, only in accordance with Subpart D of 29 CFR Part 4.

(e) Minimum Wage. In the absence of a minimum wage attachment for this contract, neither the Contractor nor any subcontractor under this contract shall pay any person performing work under this contract (regardless of whether the person is a service employee) less than the minimum wage specified by section

6(a)(1) of the Fair Labor Standards Act of 1938. Nothing in this clause shall relieve the Contractor or any subcontractor of any other obligation under law or contract for payment of a higher wage to any employee.

(f) Successor Contracts. If this contract succeeds a contract subject to the Act under which substantially the same services were furnished in the same locality and service employees were paid wages and fringe benefits provided for in a collective bargaining agreement, in the absence of the minimum wage attachment for this contract setting forth such collectively bargained wage rates and fringe benefits, neither the Contractor nor any subcontractor under this contract shall pay any service employee performing any of the contract work (regardless of whether or not such employee was employed under the predecessor contract), less than the wages and fringe benefits provided for in such collective bargaining agreement, to which such employee would have been entitled if employed under the predecessor contract, including accrued wages and fringe benefits and any prospective increases in wages and fringe benefits provided for under such agreement. No Contractor or subcontractor under this contract may be relieved of the foregoing obligation unless the limitations of 29 CFR 4.1b(b) apply or unless the Secretary of Labor or the Secretary's authorized representative finds, after a hearing as provided in 29 CFR 4.10 that the wages and/or fringe benefits provided for in such agreement are substantially at variance with those which prevail for services of a character similar in the locality, or determines, as provided in 29 CFR 4.11, that the collective bargaining agreement applicable to service employees employed under the predecessor contract was not entered into as a result of arm's length negotiations. Where it is found in accordance with the review procedures provided in 29 CFR 4.10 and/or 4.11 and Parts 6 and 8 that some or all of the wages and/or fringe benefits contained in a predecessor Contractor's collective bargaining agreement are substantially at variance with those which prevail for services of a character similar in the locality, and/or that the collective bargaining agreement applicable to service employees employed under the predecessor contract was not entered into as a result of arm's length negotiations, the Department will issue a new or revised wage determination setting forth the applicable wage rates and fringe benefits. Such determination shall be made part of the contract or subcontract, in accordance with the decision of the Administrator, the Administrative Law Judge, or the Board of Service Contract Appeals, as the case may be, irrespective of whether such issuance occurs prior to or after the award of a contract or subcontract (53 Comp. Gen. 401 (1973)). In the case of a wage determination issued solely as a result of a finding of substantial variance, such determination shall be effective as of the date of the final administrative decision.

(g) Notification to Employees. The Contractor and any subcontractor under this contract shall notify each service employee commencing work on this contract of the minimum monetary wage and any fringe benefits required to be paid pursuant to this contract, or shall post the wage determination attached to this contract. The poster provided by the Department of Labor (Publication WH 1313) shall be posted in a prominent and accessible place at the worksite. Failure to comply with this requirement is a violation of section 2(a)(4) of the Act and of this contract.

(h) Safe and Sanitary Working Conditions. The Contractor or subcontractor shall not permit any part of the services called for by this contract to be performed in buildings or surroundings or under working conditions provided by or under the control or supervision of the Contractor or subcontractor which are unsanitary, hazardous, or dangerous to the health or safety of the service employees. The Contractor or subcontractor shall comply with the safety and health standards applied under 29 CFR Part 1925.

(i) Records. (1) The Contractor and each subcontractor performing work subject to the Act shall make and maintain for 3 years from the completion of the work, and make them available for inspection and transcription by authorized representatives of the Wage and Hour Division, Employment Standards Administration, a record of the following:

(i) For each employee subject to the Act--

(A) Name and address and social security number;

(B) Correct work classification or classifications, rate or rates of monetary wages paid and fringe benefits provided, rate or rates of payments in lieu of fringe benefits, and total daily and weekly compensation;

(C) Daily and weekly hours worked by each employee; and

(D) Any deductions, rebates, or refunds from the total daily or weekly compensation of each employee.

(ii) For those classes of service employees not included in any wage determination attached to this contract, wage rates or fringe benefits determined by the interested parties or by the Administrator or authorized representative under the terms of paragraph (c) of this clause. A copy of the report required by subdivision (c)(2)(ii) of this clause will fulfill this requirement.

(iii) Any list of the predecessor Contractor's employees which had been furnished to the Contractor as prescribed by paragraph (n) of this clause.

(2) The Contractor shall also make available a copy of this contract for inspection or transcription by authorized representatives of the Wage and Hour Division.

(3) Failure to make and maintain or to make available these records for inspection and transcription shall be a violation of the regulations and this contract, and in the case of failure to produce these records, the Contracting Officer, upon direction of the Department of Labor and notification to the Contractor, shall take action to cause suspension of any further payment or advance of funds until the violation ceases.

(4) The Contractor shall permit authorized representatives of the Wage and Hour Division to conduct interviews with employees at the worksite during normal working hours.

(j) Pay Periods. The Contractor shall unconditionally pay to each employee subject to the Act all wages due free and clear and without subsequent deduction (except as otherwise provided by law or regulations, 29 CFR Part 4), rebate, or kickback on any account. These payments shall be made no later than one pay period following the end of the regular pay period in which the wages were earned or accrued. A pay period under this Act may not be of any duration longer than semi-monthly.

(k) Withholding of Payments and Termination of Contract. The Contracting Officer shall withhold or cause to be withheld from the Government Prime Contractor under this or any other Government contract with the Prime Contractor such sums as an appropriate official of the Department of Labor requests or such sums as the Contracting Officer decides may be necessary to pay underpaid employees employed by the Contractor or subcontractor. In the event of failure to pay any employees subject to the Act all or part of the wages or fringe benefits due under the Act, the Contracting Officer may, after authorization or by direction of the Department of Labor and written notification to the Contractor, take action to cause suspension of any further payment or advance of funds until such violations have ceased. Additionally, any failure to comply with the requirements of this clause may be grounds for termination of the right to proceed with the contract work. In such event, the Government may enter into other contracts or arrangements for completion of the work, charging the Contractor in default with any additional cost.

(l) Subcontracts. The Contractor agrees to insert this clause in all subcontracts subject to the Act.

(m) Collective Bargaining Agreements Applicable to Service Employees. If wages to be paid or fringe benefits to be furnished any service employees employed by the Government Prime Contractor or any subcontractor under the contract are provided for in a collective bargaining agreement which is or will be effective during any period in which the contract is being performed, the Government Prime Contractor shall report such fact to the Contracting Officer, together with full information as to the application and accrual of such wages and fringe benefits, including any prospective increases, to service employees engaged in work on the contract, and a copy of the collective bargaining agreement. Such report shall be made upon commencing performance of the contract, in the case of collective bargaining agreements effective at such time, and in the case of such agreements or provisions or amendments thereof effective at a later time during the period of contract performance such agreements shall be reported promptly after negotiation thereof.

(n) Seniority List. Not less than 10 days prior to completion of any contract being performed at a Federal

facility where service employees may be retained in the performance of the succeeding contract and subject to a wage determination which contains vacation or other benefit provisions based upon length of service with a Contractor (predecessor) or successor (29 CFR 4.173), the incumbent Prime Contractor shall furnish the Contracting Officer a certified list of the names of all service employees on the Contractor's or subcontractor's payroll during the last month of contract performance. Such list shall also contain anniversary dates of employment on the contract either with the current or predecessor Contractors of each such service employee. The Contracting Officer shall turn over such list to the successor Contractor at the commencement of the succeeding contract.

(o) Rulings and Interpretations. Rulings and interpretations of the Act are contained in Regulations, 29 CFR Part 4.

(p) Contractor's Certification. (1) By entering into this contract, the Contractor (and officials thereof) certifies that neither it (nor he or she) nor any person or firm who has a substantial interest in the Contractor's firm is a person or firm ineligible to be awarded Government contracts by virtue of the sanctions imposed under section 5 of the Act.

(2) No part of this contract shall be subcontracted to any person or firm ineligible for award of a Government contract under section 5 of the Act.

(3) The penalty for making false statements is prescribed in the U.S. Criminal Code, 18 U.S.C. 1001.

(q) Variations, Tolerances, and Exemptions Involving Employment. Notwithstanding any of the provisions in paragraphs (b) through (o) of this clause, the following employees may be employed in accordance with the following variations, tolerances, and exemptions, which the Secretary of Labor, pursuant to section 4(b) of the Act prior to its amendment by Pub. L. 92-473, found to be necessary and proper in the public interest or to avoid serious impairment of the conduct of Government business:

(1) Apprentices, student-learners, and workers whose earning capacity is impaired by age, physical or mental deficiency, or injury may be employed at wages lower than the minimum wages otherwise required by section 2(a)(1) or 2(b)(1) of the Act without diminishing any fringe benefits or cash payments in lieu thereof required under section 2(a)(2) of the Act, in accordance with the conditions and procedures prescribed for the employment of apprentices, student-learners, handicapped persons, and handicapped clients of sheltered workshops under section 14 of the Fair Labor Standards Act of 1938, in the regulations issued by the Administrator (29 CFR Parts 520, 521, 524, and 525).

(2) The Administrator will issue certificates under the Act for the employment of apprentices, student-learners, handicapped persons, or handicapped clients of sheltered workshops not subject to the Fair Labor Standards Act of 1938, or subject to different minimum rates of pay under the two acts, authorizing appropriate rates of minimum wages (but without changing requirements concerning fringe benefits or supplementary cash payments in lieu thereof), applying procedures prescribed by the applicable regulations issued under the Fair Labor Standards Act of 1938 (29 CFR Parts 520, 521, 524, and 525).

(3) The Administrator will also withdraw, annul, or cancel such certificates in accordance with the regulations in 29 CFR Parts 525 and 528.

(r) Apprentices. Apprentices will be permitted to work at less than the predetermined rate for the work they perform when they are employed and individually registered in a bona fide apprenticeship program registered with a State Apprenticeship Agency which is recognized by the U.S. Department of Labor, or if no such recognized agency exists in a State, under a program registered with the Bureau of Apprenticeship and Training, Employment and Training Administration, U.S. Department of Labor. Any employee who is not registered as an apprentice in an approved program shall be paid the wage rate and fringe benefits contained in the applicable wage determination for the journeyman classification of work actually performed. The wage rates paid apprentices shall not be less than the wage rate for their level of progress set forth in the registered program, expressed as the appropriate percentage of the journeyman's rate contained in the applicable wage determination. The allowable ratio of apprentices to journeymen

employed on the contract work in any craft classification shall not be greater than the ratio permitted to the Contractor as to his entire work force under the registered program.

(s) Tips. An employee engaged in an occupation in which the employee customarily and regularly receives more than $30 a month in tips may have the amount of these tips credited by the employer against the minimum wage required by section 2(a)(1) or section 2(b)(1) of the Act, in accordance with section 3(m) of the Fair Labor Standards Act and Regulations, 29 CFR Part 531. However, the amount of credit shall not exceed $1.34 per hour beginning January 1, 1981. To use this provision--

(1) The employer must inform tipped employees about this tip credit allowance before the credit is utilized;

(2) The employees must be allowed to retain all tips (individually or through a pooling arrangement and regardless of whether the employer elects to take a credit for tips received);

(3) The employer must be able to show by records that the employee receives at least the applicable Service Contract Act minimum wage through the combination of direct wages and tip credit; and

(4) The use of such tip credit must have been permitted under any predecessor collective bargaining agreement applicable by virtue of section 4(c) of the Act.

Disputes Concerning Labor Standards. The U.S. Department of Labor has set forth in 29 CFR Parts 4, 6, and 8 procedures for resolving disputes concerning labor standards requirements. Such disputes shall be resolved in accordance with those procedures and not the Disputes clause of this contract. Disputes within the meaning of this clause include disputes between the Contractor (or any of its subcontractors) and the contracting agency, the U.S. Department of Labor, or the employees or their representatives.

(End of clause)

52.222-42 SVC STATEMENT OF EQUIVALENT RATES FOR FEDERAL HIRES (MAY 1989)

In compliance with the Service Contract Act of 1965, as amended, and the regulations of the Secretary of Labor (29 CFR Part 4), this clause identifies the classes of service employees expected to be employed under the contract and states the wages and fringe benefits payable to each if they were employed by the contracting agency subject to the provisions of 5 U.S.C. 5341 or 5332.

THIS STATEMENT IS FOR INFORMATION ONLY: IT IS NOT A WAGE DETERMINATION
Employee Class Monetary Wage-Fringe Benefits

(End of clause)

52.222-43 SVC FAIR LABOR STANDARDS ACT AND SERVICE CONTRACT ACT--PRICE ADJUSTMENT (MULTIPLE YEAR AND OPTION CONTRACTS) (MAY 1989)

(a) This clause applies to both contracts subject to area prevailing wage determinations and contracts subject to collective bargaining agreements.

(b) The Contractor warrants that the prices in this contract do not include any allowance for any contingency to cover increased costs for which adjustment is provided under this clause.

(c) The wage determination, issued under the Service Contract Act of 1965, as amended, (41 U.S.C. 351, et seq.), by the Administrator, Wage and Hour Division, Employment Standards Administration, U.S. Department of Labor, current on the anniversary date of a multiple year contract or the beginning of each renewal option period, shall apply to this contract. If no such determination has been made applicable to this contract, then the Federal minimum wage as established by section 6(a)(1) of the Fair Labor Standards

Act of 1938, as amended, (29 U.S.C. 206) current on the anniversary date of a multiple year contract or the beginning of each renewal option period, shall apply to this contract.

(d) The contract price or contract unit price labor rates will be adjusted to reflect the Contractor's actual increase or decrease in applicable wages and fringe benefits to the extent that the increase is made to comply with or the decrease is voluntarily made by the Contractor as a result of:

(1) The Department of Labor wage determination applicable on the anniversary date of the multiple year contract, or at the beginning of the renewal option period. For example, the prior year wage determination required a minimum wage rate of $4.00 per hour. The Contractor chose to pay $4.10. The new wage determination increases the minimum rate to $4.50 per hour. Even if the Contractor voluntarily increases the rate to $4.75 per hour, the allowable price adjustment is $.40 per hour;

(2) An increased or decreased wage determination otherwise applied to the contract by operation of law; or

(3) An amendment to the Fair Labor Standards Act of 1938 that is enacted after award of this contract, affects the minimum wage, and becomes applicable to this contract under law.

(e) Any adjustment will be limited to increases or decreases in wages and fringe benefits as described in paragraph (c) of this clause, and the accompanying increases or decreases in social security and unemployment taxes and workers' compensation insurance, but shall not otherwise include any amount for general and administrative costs, overhead, or profit.

(f) The Contractor shall notify the Contracting Officer of any increase claimed under this clause within 30 days after receiving a new wage determination unless this notification period is extended in writing by the Contracting Officer. The Contractor shall promptly notify the Contracting Officer of any decrease under this clause, but nothing in the clause shall preclude the Government from asserting a claim within the period permitted by law. The notice shall contain a statement of the amount claimed and any relevant supporting data, including payroll records, that the Contracting Officer may reasonably require. Upon agreement of the parties, the contract price or contract unit price labor rates shall be modified in writing. The Contractor shall continue performance pending agreement on or determination of any such adjustment and its effective date.

(g) The Contracting Officer or an authorized representative shall have access to and the right to examine any directly pertinent books, documents, papers and records of the Contractor until the expiration of 3 years after final payment under the contract.

(End of clause)

52.222-44 SVC FAIR LABOR STANDARDS ACT AND SERVICE CONTRACT ACT--PRICE ADJUSTMENT (MAY 1989)

(a) This clause applies to both contracts subject to area prevailing wage determinations and contracts subject to Contractor collective bargaining agreements.

(b) The Contractor warrants that the prices in this contract do not include any allowance for any contingency to cover increased costs for which adjustment is provided under this clause.

(c) The contract price or contract unit price labor rates will be adjusted to reflect increases or decreases by the Contractor in wages and fringe benefits to the extent that these increases or decreases are made to comply with--

(1) An increased or decreased wage determination applied to this contract by operation of law; or

(2) An amendment to the Fair Labor Standards Act of 1938 that is enacted subsequent to award of this contract, affects the minimum wage, and becomes applicable to this contract under law.

(d) Any such adjustment will be limited to increases or decreases in wages and fringe benefits as described in paragraph (b) of this clause, and to the accompanying increases or decreases in social security and unemployment taxes and workers' compensation insurance; it shall not otherwise include any amount for general and administrative costs, overhead, or profit.

(e) The Contractor shall notify the Contracting Officer of any increase claimed under this clause within 30 days after the effective date of the wage change, unless this period is extended by the Contracting Officer in writing. The Contractor shall promptly notify the Contracting Officer of any decrease under this clause, but nothing in the clause shall preclude the Government from asserting a claim within the period permitted by law. The notice shall contain a statement of the amount claimed and any relevant supporting data that the Contracting Officer may reasonably require. Upon agreement of the parties, the contract price or contract unit price labor rates shall be modified in writing. The Contractor shall continue performance pending agreement on or determination of any such adjustment and its effective date.

(f) The Contracting Officer or an authorized representative shall, until the expiration of 3 years after final payment under the contract, have access to and the right to examine any directly pertinent books, documents, papers, and records of the Contractor.

(End of clause)

52.222-46 SVC EVALUATION OF COMPENSATION FOR PROFESSIONAL EMPLOYEES (FEB 1993)

(a) Recompetition of service contracts may in some cases result in lowering the compensation (salaries and fringe benefits) paid or furnished professional employees. This lowering can be detrimental in obtaining the quality of professional services needed for adequate contract performance. It is therefore in the Government's best interest that professional employees, as defined in 29 CFR 541, be properly and fairly compensated. As part of their proposals, offerors will submit a total compensation plan setting forth salaries and fringe benefits proposed for the professional employees who will work under the contract. The Government will evaluate the plan to assure that it reflects a sound management approach and understanding of the contract requirements. This evaluation will include an assessment of the offeror's ability to provide uninterrupted high-quality work. The professional compensation proposed will be considered in terms of its impact upon recruiting and retention, its realism, and its consistency with a total plan for compensation. Supporting information will include data, such as recognized national and regional compensation surveys and studies of professional, public and private organizations, used in establishing the total compensation structure.

(b) The compensation levels proposed should reflect a clear understanding of work to be performed and should indicate the capability of the proposed compensation structure to obtain and keep suitably qualified personnel to meet mission objectives. The salary rates or ranges must take into account differences in skills, the complexity of various disciplines, and professional job difficulty. Additionally, proposals envisioning compensation levels lower than those of predecessor contractors for the same work will be evaluated on the basis of maintaining program continuity, uninterrupted high-quality work, and availability of required competent professional service employees. Offerors are cautioned that lowered compensation for essentially the same professional work may indicate lack of sound management judgment and lack of understanding of the requirement.

(c) The Government is concerned with the quality and stability of the work force to be employed on this contract. Professional compensation that is unrealistically low or not in reasonable relationship to the various job categories, since it may impair the Contractor's ability to attract and retain competent professional service employees, may be viewed as evidence of failure to comprehend the complexity of the contract requirements.

(d) Failure to comply with these provisions may constitute sufficient cause to justify rejection of a proposal.

(End of provision)

52.223-3 HAZARDOUS MATERIAL IDENTIFICATION AND MATERIAL SAFETY DATA (JAN 1997)

(a) "Hazardous material", as used in this clause, includes any material defined as hazardous under the latest version of Federal Standard No. 313 (including revisions adopted during the term of the contract).

(b) The offeror must list any hazardous material, as defined in paragraph (a) of this clause, to be delivered under this contract. The hazardous material shall be properly identified and include any applicable identification number, such as National Stock Number or Special Item Number. This information shall also be included on the Material Safety Data Sheet submitted under this contract.

Material (If none, insert "None")	Identification No.
_____	_____
_____	_____
_____	_____

(c) This list must be updated during performance of the contract whenever the Contractor determines that any other material to be delivered under this contract is hazardous.

(d) The apparently successful offeror agrees to submit, for each item as required prior to award, a Material Safety Data Sheet, meeting the requirements of 29 CFR 1910.1200(g) and the latest version of Federal Standard No. 313, for all hazardous material identified in paragraph (b) of this clause. Data shall be submitted in accordance with Federal Standard No. 313, whether or not the apparently successful offeror is the actual manufacturer of these items. Failure to submit the Material Safety Data Sheet prior to award may result in the apparently successful offeror being considered nonresponsible and ineligible for award.

(e) If, after award, there is a change in the composition of the item(s) or a revision to Federal Standard No. 313, which renders incomplete or inaccurate the data submitted under paragraph (d) of this clause, the Contractor shall promptly notify the Contracting Officer and resubmit the data.

(f) Neither the requirements of this clause nor any act or failure to act by the Government shall relieve the Contractor of any responsibility or liability for the safety of Government, Contractor, or subcontractor personnel or property.

(g) Nothing contained in this clause shall relieve the Contractor from complying with applicable Federal, State, and local laws, codes, ordinances, and regulations (including the obtaining of licenses and permits) in connection with hazardous material.

(h) The Government's rights in data furnished under this contract with respect to hazardous material are as follows:

(1) To use, duplicate and disclose any data to which this clause is applicable. The purposes of this right are to--

(i) Apprise personnel of the hazards to which they may be exposed in using, handling, packaging, transporting, or disposing of hazardous materials;

(ii) Obtain medical treatment for those affected by the material; and

(iii) Have others use, duplicate, and disclose the data for the Government for these purposes.

(2) To use, duplicate, and disclose data furnished under this clause, in accordance with subparagraph (h)(1) of this clause, in precedence over any other clause of this contract providing for rights in data.

(3) The Government is not precluded from using similar or identical data acquired from other sources.

(End of clause)

52.223-5 POLLUTION PREVENTION AND RIGHT-TO-KNOW INFORMATION (APR 1998)

(a) Executive Order 12856 of August 3, 1993, requires Federal facilities to comply with the provisions of the Emergency Planning and Community Right-to-Know Act of 1986 (EPCRA)(42 U.S.C. 11001-11050) and the Pollution Prevention Act of 1990 (PPA)(42 U.S.C. 13101-13109).

(b) The Contractor shall provide all information needed by the Federal facility to comply with the emergency planning reporting requirements of Section 302 of EPCRA; the emergency notice requirements of Section 304 of EPCRA; the list of Material Safety Data Sheets required by Section 311 of EPCRA; the emergency and hazardous chemical inventory forms of Section 312 of EPCRA; the toxic chemical release inventory of Section 313 of EPCRA, which includes the reduction and recycling information required by Section 6607 of PPA; and the toxic chemical reduction goals requirements of Section 3-302 of Executive Order 12856.

52.223-6 DRUG-FREE WORKPLACE (JAN 1997)

(a) Definitions. As used in this clause --

"Controlled substance" means a controlled substance in schedules I through V of section 202 of the Controlled Substances Act (21 U.S.C. 812) and as further defined in regulation at 21 CFR 1308.11 - 1308.15.

"Conviction" means a finding of guilt (including a plea of nolo contendere) or imposition of sentence, or both, by any judicial body charged with the responsibility to deter- mine violations of the Federal or State criminal drug statutes.

"Criminal drug statute" means a Federal or non-Federal criminal statute involving the manufacture, distribution, dispensing, possession, or use of any controlled substance.

"Drug-free workplace" means the site(s) for the performance of work done by the Contractor in connection with a specific contract at which employees of the Contractor are prohibited from engaging in the unlawful manufacture, distribution, dispensing, possession, or use of a controlled substance.

"Employee" means an employee of a Contractor directly engaged in the performance of work under a Government contract. "Directly engaged" is defined to include all direct cost employees and any other Contractor employee who has other than a minimal impact or involvement in contract performance.

"Individual" means an offeror/contractor that has no more than one employee including the offeror/contractor.

(b) The Contractor, if other than an individual, shall-- within 30 days after award (unless a longer period is agreed to in writing for contracts of 30 days or more performance duration), or as soon as possible for contracts of less than 30 days performance duration--

(1) Publish a statement notifying its employees that the unlawful manufacture, distribution, dispensing, possession, or use of a controlled substance is prohibited in the Contractor's workplace and specifying the actions that will be taken against employees for violations of such prohibition;

(2) Establish an ongoing drug-free awareness program to inform such employees about--

(i) The dangers of drug abuse in the workplace;

(ii) The Contractor's policy of maintaining a drug-free workplace;

(iii) Any available drug counseling, rehabilitation, and employee assistance programs; and

(iv) The penalties that may be imposed upon employees for drug abuse violations occurring in the workplace;

(3) Provide all employees engaged in performance of the contract with a copy of the statement required by subparagraph (b)(1) of this clause;

(4) Notify such employees in writing in the statement required by subparagraph (b)(1) of this clause that, as a condition of continued employment on this contract, the employee will--

(i) Abide by the terms of the statement; and

(ii) Notify the employer in writing of the employee's conviction under a criminal drug statute for a violation occurring in the workplace no later than 5 days after such conviction.

(5) Notify the Contracting Officer in writing within 10 days after receiving notice under subdivision (b)(4)(ii) of this clause, from an employee or otherwise receiving actual notice of such conviction. The notice shall include the position title of the employee;

(6) Within 30 days after receiving notice under subdivision (b)(4)(ii) of this clause of a conviction, take one of the following actions with respect to any employee who is convicted of a drug abuse violation occurring in the workplace:

(i) Taking appropriate personnel action against such employee, up to and including termination; or

(ii) Require such employee to satisfactorily participate in a drug abuse assistance or rehabilitation program approved for such purposes by a Federal, State, or local health, law enforcement, or other appropriate agency; and

(7) Make a good faith effort to maintain a drug-free workplace through implementation of subparagraphs (b)(1) though (b)(6) of this clause.

(c) The Contractor, if an individual, agrees by award of the contract or acceptance of a purchase order, not to engage in the unlawful manufacture, distribution, dispensing, possession, or use of a controlled substance while performing this contract.

(d) In addition to other remedies available to the Government, the Contractor's failure to comply with the requirements of paragraph (b) or (c) of this clause may, pursuant to FAR 23.506, render the Contractor subject to suspension of contract payments, termination of the contract for default, and suspension or debarment.

(End of clause)

52.223-12 SVC REFRIGERATION EQUIPMENT AND AIR CONDITIONERS. (MAY 1995)

The Contractor shall comply with the applicable requirements of Sections 608 and 609 of the Clean Air Act (42 U.S.C. 7671g and 7671h) as each or both apply to this contract.

52.223-14 TOXIC CHEMICAL RELEASE REPORTING (OCT 1996)

(a) Unless otherwise exempt, the Contractor, as owner or operator of a facility used in the performance of this contract, shall file by July 1 for the prior calendar year an annual Toxic Chemical Release Inventory Form (Form R) as described in sections 313(a) and (g) of the Emergency Planning and Community Right-to-Know Act of 1986 (EPCRA) (42 U.S.C. 11023(a) and (g)), and section 6607 of the Pollution Prevention Act of 1990 (PPA) (42 U.S.C. 13106). The Contractor shall file, for each facility subject to the Form R filing and reporting requirements, the annual Form R throughout the life of the contract.

(b) A Contractor owned or operated facility used in the performance of this contract is exempt from the requirement to file an annual Form R if--

(1) The facility does not manufacture, process, or otherwise use any toxic chemicals listed under section 313(c) of EPCRA, 42 U.S.C. 11023(c);

(2) The facility does not have 10 or more full-time employees as specified in section 313(b)(1)(A) of EPCRA, 42 U.S.C. 11023(b)(1)(A);

(3) The facility does not meet the reporting thresholds of toxic chemicals established under of EPCRA, 42 U.S.C. 11023(f) (including the alternate thresholds at 40 CFR 372.27, provided an appropriate certification form has been filed with EPA);

(4) The facility does not fall within Standard Industrial Classification Code (SIC) designations 20 through 39 as set forth in section 19.102 of the Federal Acquisition Regulation (FAR); or

(5) The facility is not located within any State of the United States, the District of Columbia, the Commonwealth of Puerto Rico, Guam, American Samoa, the United States Virgin Islands, the Northern Mariana Islands, or any other territory or possession over which the United States has jurisdiction.

(c) If the Contractor has certified to an exemption in accordance with one or more of the criteria in paragraph (b) of this clause, and after award of the contract circumstances change so that any of its owned or operated facilities used in the performance of this contract is no longer exempt--

(1) The Contractor shall notify the Contracting Officer; and

(2) The Contractor, as owner or operator of a facility used in the performance of this contract that is no longer exempt, shall (i) submit a Toxic Chemical Release Inventory Form (Form R) on or before July 1 for the prior calendar year during which the facility becomes eligible; and (ii) continue to file the annual Form R for the life of the contract for such facility.

(d) The Contracting Officer may terminate this contract or take other action as appropriate, if the Contractor fails to comply accurately and fully with the EPCRA and PPA toxic chemical release filing and reporting requirements.

(e) Except for acquisitions of commercial items, as defined in FAR Part 2, the Contractor shall--

(1) For competitive subcontracts expected to exceed $100,000 (including all options), include a solicitation provision substantially the same as the provision at FAR 52.223-13, Certification of Toxic Chemical Release Reporting; and

(2) Include in any resultant subcontract exceeding $100,000 (including all options), the substance of this clause, except this paragraph (e).

52.225-1 SVC BUY AMERICAN ACT--BALANCE OF PAYMENTS PROGRAM--SUPPLIES (FEB 2000)

(a) Definitions. As used in this clause--

Component means any item supplied to the Government as part of an end item or of another component.

Cost of components means--

(1) For components purchased by the Contractor, the acquisition cost, including transportation costs to the place of incorporation into the end product (whether or not such costs are paid to a domestic firm), and any applicable duty (whether or not a duty-free entry certificate is issued); or

(2) For components manufactured by the Contractor, all costs associated with the manufacture of the component, including transportation costs as described in paragraph (1) of this definition, plus allocable overhead costs, but excluding profit. Cost of components does not include any costs associated with the manufacture of the end product.

Domestic end product means--

(1) An unmanufactured end product mined or produced in the United States; or

(2) An end product manufactured in the United States, if the cost of its components mined, produced, or manufactured in the United States exceeds 50 percent of the cost of all its components. Components of foreign origin of the same class or kind as those that the agency determines are not mined, produced, or manufactured in sufficient and reasonably available commercial quantities of a satisfactory quality are treated as domestic. Scrap generated, collected, and prepared for processing in the United States is considered domestic.

End product means supplies delivered under a line item of a Government contract.

Foreign end product means an end product other than a domestic end product.

United States means the 50 States and the District of Columbia, U.S. territories and possessions, Puerto Rico, the Northern Mariana Islands, and any other place subject to U.S. jurisdiction, but does not include leases bases.

(b) The Buy American Act (41 U.S.C. 10a-10d) provides a preference for domestic end products for supplies acquired for use in the United States. The Balance of Payments Program provides a preference for domestic end products for supplies acquired for use outside the United States.

(c) Offerors may obtain from the Contracting Officer a list of foreign articles that the Contracting Officer will treat as domestic for this contract.

(d) The Contractor shall deliver only domestic end products except to the extent that it specified delivery of foreign end products in the provision of the solicitation entitled ``Buy American Act--Balance of Payments Program Certificate."

(End of clause)

52.225-2 SVC BUY AMERICAN ACT--BALANCE OF PAYMENTS PROGRAM CERTIFICATE (FEB 2000)

(a) The offeror certifies that each end product, except those listed in paragraph (b) of this provision, is a domestic end product as defined in the clause of this solicitation entitled ``Buy American Act--Balance of Payments Program--Supplies'' and that the offeror has considered components of unknown origin to have been mined, produced, or manufactured outside the United States. The offeror shall list as foreign end products those end products manufactured in the United States that do not qualify as domestic and products.

(b) Foreign End Products:

Line Item No.:----------

Country of Origin:----------

(List as necessary)

(c) The Government will evaluate offers in accordance with the policies and procedures of Part 25 of the Federal Acquisition Regulation.

(End of provision)

52.225-11 C BUY AMERICAN ACT--BALANCE OF PAYMENTS PROGRAM--CONSTRUCTION MATERIALS UNDER TRADE AGREEMENTS (FEB 2000)

(a) Definitions. As used in this clause--

Component means any article, material, or supply incorporated directly into construction materials.

Construction material means an article, material, or supply brought to the construction site by the Contractor or subcontractor for incorporation into the building or work. The term also includes an item brought to the site preassembled from articles, materials, or supplies. However, emergency life safety systems, such as emergency lighting, fire alarm, and audio evacuation systems, that are discrete systems incorporated into a public building or work and that are produced as complete systems, are evaluated as a single and distinct construction material regardless of when or how the individual parts or components of those systems are delivered to the construction site. Materials purchased directly by the Government are supplies, not construction material.

Cost of components means--

(1) For components purchased by the Contractor, the acquisition cost, including transportation costs to the place of incorporation into the end product (whether or not such costs are paid to a domestic firm), and any applicable duty (whether or not a duty-free entry certificate is issued); or

(2) For components manufactured by the Contractor, all costs associated with the manufacture of the component, including transportation costs as described in paragraph (1) of this definition, plus allocable overhead costs, but excluding profit. Cost of components does not include any costs associated with the manufacture of the end product.

Designated country means any of the following countries: Aruba, Austria, Bangladesh, Belgium, Benin, Bhutan, Botswana, Burkina Faso, Burundi, Canada, Cape Verde, Central African Republic, Chad, Comoros, Denmark.

Djibouti, Equatorial Guinea, Finland, France, Gambia, Germany, Greece, Guinea, Guinea-Bissau, Haiti, Hong Kong, Ireland, Israel, Italy, Japan.

Kiribati, Korea, Republic of, Lesotho, Liechtenstein, Luxembourg, Malawi, Maldives, Mali, Mozambique, Nepal, Netherlands, Niger, Norway, Portugal, Rwanda.

Sao Tome and Principe, Sierra Leone, Singapore, Somalia, Spain, Sweden, Switzerland, Tanzania U.R., Togo, Tuvalu, Uganda, United Kingdom, Vanuatu, Western Samoa, Yemen.

Designated country construction material means a construction material that--

(1) Is wholly the growth, product, or manufacture of a designated country; or

(2) In the case of a construction material that consists in whole or in part of materials from another country, has been substantially transformed in a designated country into a new and different construction material distinct from the materials from which it was transformed.

Domestic construction material means--

(1) An unmanufactured construction material mined or produced in the United States; or

(2) A construction material manufactured in the United States, if the cost of its components mined, produced, or manufactured in the United States exceeds 50 percent of the cost of all its components. Components of foreign origin of the same class or kind for which nonavailability determinations have been made are treated as domestic.

Foreign construction material means a construction material other than a domestic construction material.

North American Free Trade Agreement country means Canada or Mexico.

North American Free Trade Agreement country construction material means a construction material that--

(1) Is wholly the growth, product, or manufacture of a North American Free Trade Agreement (NAFTA) country; or

(2) In the case of a construction material that consists in whole or in part of materials from another country, has been substantially transformed in a NAFTA country into a new and different construction material distinct from the materials from which it was transformed.

United States means the 50 States and the District of Columbia, U.S. territories and possessions, Puerto Rico, the Northern Mariana Islands, and any other place subject to U.S. jurisdiction, but does not include leased bases.

(b) Construction materials. (1) This clause implements the Buy American Act (41 U.S.C. 10a-10d) and the Balance of Payments Program by providing a preference for domestic construction material. In addition, the Contracting Officer has determined that the Trade Agreements Act and the North American Free Trade Agreement (NAFTA) apply to this acquisition. Therefore, the Buy American Act and Balance of Payments Program restrictions are waived for designated country and NAFTA country construction materials.

(2) The Contractor shall use only domestic, designated country, or NAFTA country construction material in performing this contract, except as provided in paragraphs (b)(3) and (b)(4) of this clause.

(3) The requirement in paragraph (b)(2) of this clause does not apply to the construction materials or components listed by the Government as follows: See FAR 25.108 and DFARS 225.108, Excepted Articles, Materials and Supplies.

(4) The Contracting Officer may add other foreign construction material to the list in paragraph (b)(3) of this clause if the Government determines that--

(i) The cost of domestic construction material would be unreasonable. The cost of a particular domestic construction material subject to the restrictions of the Buy American Act is unreasonable when the cost of such material exceeds the cost of foreign material by more than 6 percent. For determination of unreasonable cost under the Balance of Payments Program, the Contracting Officer will use a factor of 50 percent;

(ii) The application of the restriction of the Buy American Act or Balance of Payments Program to a particular construction material would be impracticable or inconsistent with the public interest; or

(iii) The construction material is not mined, produced, or manufactured in the United States in sufficient and reasonably available commercial quantities of a satisfactory quality.

(c) Request for determination of inapplicability of the Buy American Act or Balance of Payments Program. (1)(i) Any Contractor request to use foreign construction material in accordance with paragraph (b)(4) of this clause shall include adequate information for Government evaluation of the request, including--

(A) A description of the foreign and domestic construction materials;

(B) Unit of measure;

(C) Quantity;

(D) Price;

(E) Time of delivery or availability;

(F) Location of the construction project;

(G) Name and address of the proposed supplier; and

(H) A detailed justification of the reason for use of foreign construction materials cited in accordance with paragraph (b)(3) of this clause.

(ii) A request based on unreasonable cost shall include a reasonable survey of the market and a completed price comparison table in the format in paragraph (d) of this clause.

(iii) The price of construction material shall include all delivery costs to the construction site and any applicable duty (whether or not a duty-free certificate may be issued).

(iv) Any Contractor request for a determination submitted after contract award shall explain why the Contractor could not reasonably foresee the need for such determination and could not have requested the determination before contract award. If the Contractor does not submit a satisfactory explanation, the Contracting Officer need not make a determination.

(2) If the Government determines after contract award that an exception to the Buy American Act or Balance of Payments Program applies and the Contracting Officer and the Contractor negotiate adequate consideration, the Contracting Officer will modify the contract to allow use of the foreign construction material. However, when the basis for the exception is the unreasonable price of a domestic construction material, adequate consideration is not less than the differential established in paragraph (b)(4)(i) of this clause.

(3) Unless the Government determines that an exception to the Buy American Act or Balance of Payments Program applies, use of foreign construction material is noncompliant with the Buy American Act or Balance of Payments Program.

(d) Data. To permit evaluation of requests under paragraph (c) of this clause based on unreasonable cost, the Contractor shall include the following information and any applicable supporting data based on the survey of suppliers:

Foreign and Domestic Construction Materials Price Comparison

Construction material description	Unit of measure	Quantity	Price (dollars) \1\
Item 1:			
Foreign construction material....	.....	.....	.....
Domestic construction material...	.....	.....	.....
Item 2:			
Foreign construction material....	.....	.....	.....
Domestic construction material...	.....	.....	.....

\1\ Include all delivery costs to the construction site and any applicable duty (whether or not a duty-free entry certificate is issued).
List name, address, telephone number, and contact for suppliers surveyed. Attach copy of response; if oral, attach summary.
Include other applicable supporting information.

(End of clause)

52.225-13 RESTRICTIONS ON CERTAIN FOREIGN PURCHASES (FEB 2000)

(a) The Contractor shall not acquire, for use in the performance of this contract, any supplies or services originating from sources within, or that were located in or transported from or through, countries whose products are banned from importation into the United States under regulations of the Office of Foreign Assets Control, Department of the Treasury. Those countries are Cuba, Iran, Iraq, Libya, North Korea, and Sudan.

(b) The Contractor shall not acquire for use in the performance of this contract any supplies or services from entities controlled by the government of Iraq.

(c) The Contractor shall insert this clause, including this paragraph (c), in all subcontracts.

(End of clause)

52.226-1 UTILIZATION OF INDIAN ORGANIZATIONS AND INDIAN-OWNED ECONOMIC ENTERPRISES (FEB 2000)

(a) For Department of Defense contracts, this clause applies only if the contract includes a subcontracting plan incorporated under the terms of the clause at 52.219-9, Small Business Subcontracting Plan. It does not apply to contracts awarded based on a subcontracting plan submitted and approved under paragraph (g) of the clause at 52.219-9.

(b) Definitions. As used in this clause:

"Indian" means any person who is a member of any Indian tribe, band, group, pueblo or community which is recognized by the Federal Government as eligible for services from the Bureau of Indian Affairs (BIA) in

accordance with 25 U.S.C. 1452(c) and any ``Native" as defined in the Alaska Native Claims Settlement Act (43 U.S.C. 1601).

"Indian organization" means the governing body of any Indian tribe or entity established or recognized by the governing body of an Indian tribe for the purposes of 25 U.S.C., chapter 17.

"Indian-owned economic enterprise" means any Indian-owned (as determined by the Secretary of the Interior) commercial, industrial, or business activity established or organized for the purpose of profit, provided that Indian ownership shall constitute not less than 51 percent of the enterprise.

"Indian tribe" means any Indian tribe, band, group, pueblo or community, including native villages and native groups (including corporations organized by Kenai, Juneau, Sitka, and Kodiak) as defined in the Alaska Native Claims Settlement Act, which is recognized by the Federal Government as eligible for services from BIA in accordance with 25 U.S.C. 1542(c).

"Interested party" means a prime contractor or an actual or prospective offeror whose direct economic interest would be affected by the award of a subcontract or by the failure to award a subcontract.

(c)The Contractor agrees to use its best efforts to give Indian organizations and Indian-owned economic enterprises (25 U.S.C. 1544) the maximum practicable opportunity to participate in the subcontracts it awards to the fullest extent consistent with efficient performance of its contract.

(1) The Contracting Officer and the Contractor, acting in good faith, may rely on the representation of an Indian organization or Indian-owned economic enterprise as to its eligibility, unless an interested party challenges its status or the Contracting Officer has independent reason to question that status. In the event of a challenge to the representation of a subcontractor, the Contracting Officer shall refer the matter to the U.S. Department of the Interior, Bureau of Indian Affairs (BIA), Attn: Chief, Division of Contracting and Grants Administration, 1849 C Street, NW, MS-334A-SIB, Washington, DC 20245. The BIA will determine the eligibility and notify the Contracting Officer. The 5 percent incentive payment will not be made within 50 working days of subcontract award or while a challenge is pending. If a subcontractor is determined to be an ineligible participant, no incentive payment will be made under the Indian Incentive Program.

(2) The Contractor may request an adjustment under the Indian Incentive Program to the following:

(i) The estimated cost of a cost-type contract.

(ii) The target cost of a cost-plus-incentive-fee prime contract.

(iii) The target cost and ceiling price of a fixed-price incentive prime contract.

(iv) The price of a firm-fixed-price prime contract.

(3) The amount of the equitable adjustment to the prime contract shall be 5 percent of the estimated cost, target cost or firm-fixed-price included in the subcontract initially awarded to the Indian organization or Indian-owned economic enterprise.

(4) The Contractor has the burden of proving the amount claimed and must assert its request for an adjustment prior to completion of contract performance.

(d) T The Contracting Officer, subject to the terms and conditions of the contract and the availability of funds, will authorize an incentive payment of 5 percent of the amount paid to the subcontractor. The Contracting Officer will seek funding in accordance with agency procedures.

(End of clause)

52.227-1 C & SVC AUTHORIZATION AND CONSENT (JUL 1995)

(a) The Government authorizes and consents to all use and manufacture, in performing this contract or any subcontract at any tier, of any invention described in and covered by a United States patent (1) embodied in the structure or composition of any article the delivery of which is accepted by the Government under this contract or (2) used in machinery, tools, or methods whose use necessarily results from compliance by the Contractor or a subcontractor with (i) specifications or written provisions forming a part of this contract or (ii) specific written instructions given by the Contracting Officer directing the manner of performance. The entire liability to the Government for infringement of a patent of the United States shall be determined solely by the provisions of the indemnity clause, if any, included in this contract or any subcontract hereunder (including any lower-tier subcontract), and the Government assumes liability for all other infringement to the extent of the authorization and consent hereinabove granted.

(b) The Contractor agrees to include, and require inclusion of, this clause, suitably modified to identify the parties, in all subcontracts at any tier for supplies or services (including construction, architect-engineer services, and materials, supplies, models, samples, and design or testing services expected to exceed the simplified acquisition threshold (however, omission of this clause from any subcontract, including those at or below the simplified acquisition threshold, does not affect this authorization and consent.)

52.227-2 NOTICE AND ASSISTANCE REGARDING PATENT AND COPYRIGHT INFRINGEMENT (AUG 1996)

(a) The Contractor shall report to the Contracting Officer, promptly and in reasonable written detail, each notice or claim of patent or copyright infringement based on the performance of this contract of which the Contractor has knowledge.

(b) In the event of any claim or suit against the Government on account of any alleged patent or copyright infringement arising out of the performance of this contract or out of the use of any supplies furnished or work or services performed under this contract, the Contractor shall furnish to the Government, when requested by the Contracting Officer, all evidence and information in possession of the Contractor pertaining to such suit or claim. Such evidence and information shall be furnished at the expense of the Government except where the Contractor has agreed to indemnify the Government.

(c) The Contractor agrees to include, and require inclusion of, this clause in all subcontracts at any tier for supplies or services (including construction and architect-engineer subcontracts and those for material, supplies, models, samples, or design or testing services) expected to exceed the simplified acquisition threshold at (FAR) 2.101.to exceed the dollar amount set forth in 13.000 of the Federal Acquisition Regulation (FAR).

(End of clause)

52.227-4 C PATENT INDEMNITY--CONSTRUCTION CONTRACTS (APR 1984)

Except as otherwise provided, the Contractor agrees to indemnify the Government and its officers, agents, and employees against liability, including costs and expenses, for infringement upon any United States patent (except a patent issued upon an application that is now or may hereafter be withheld from issue pursuant to a Secrecy Order under 35 U.S.C. 181) arising out of performing this contract or out of the use or disposal by or for the account of the Government of supplies furnished or work performed under this contract.

52.228-2 ADDITIONAL BOND SECURITY (OCT 1997)

The Contractor shall promptly furnish additional security required to protect the Government and persons supplying labor or materials under this contract if--

(a) Any surety upon any bond, or issuing financial institution for other security, furnished with this contract becomes unacceptable to the Government.

(b) Any surety fails to furnish reports on its financial condition as required by the Government;

(c) The contract price is increased so that the penal sum of any bond becomes inadequate in the opinion of the Contracting Officer; or

(d) An irrevocable letter of credit (ILC) used as security will expire before the end of the period of required security. If the Contractor does not furnish an acceptable extension or replacement ILC, or other acceptable substitute, at least 30 days before an ILC's scheduled expiration, the Contracting officer has the right to immediately draw on the ILC.

52.228-5 C & SVC INSURANCE--WORK ON A GOVERNMENT INSTALLATION (JAN 1997)

(a) The Contractor shall, at its own expense, provide and maintain during the entire performance of this contract, at least the kinds and minimum amounts of insurance required in the Schedule or elsewhere in the contract.

(b) Before commencing work under this contract, the Contractor shall notify the Contracting Officer in writing that the required insurance has been obtained. The policies evidencing required insurance shall contain an endorsement to the effect that any cancellation or any material change adversely affecting the Government's interest shall not be effective (1) for such period as the laws of the State in which this contract is to be performed prescribe, or (2) until 30 days after the insurer or the Contractor gives written notice to the Contracting Officer, whichever period is longer.

(c) The Contractor shall insert the substance of this clause, including this paragraph (c), in subcontracts under this contract that require work on a Government installation and shall require subcontractors to provide and maintain the insurance required in the Schedule or elsewhere in the contract. The Contractor shall maintain a copy of all subcontractors' proofs of required insurance, and shall make copies available to the Contracting Officer upon request.

(End of clause)

52.228-11 PLEDGES OF ASSETS (FEB 1992)

(a) Offerors shall obtain from each person acting as an individual surety on a bid guarantee, a performance bond, or a payment bond--

(1) Pledge of assets; and

(2) Standard Form 28, Affidavit of Individual Surety.

(b) Pledges of assets from each person acting as an individual surety shall be in the form of--

(1) Evidence of an escrow account containing cash, certificates of deposit, commercial or Government securities, or other assets described in FAR 28.203-2 (except see 28.203-2(b)(2) with respect to Government securities held in book entry form) and/or;

(2) A recorded lien on real estate. The offeror will be required to provide--

(i) Evidence of title in the form of a certificate of title prepared by a title insurance company approved by the United States Department of Justice. This title evidence must show fee simple title vested in the surety along with any concurrent owners; whether any real estate taxes are due and payable; and any recorded encumbrances against the property, including the lien filed in favor of the Government as required by FAR 28.203-3(d);

(ii) Evidence of the amount due under any encumbrance shown in the evidence of title;

(iii) A copy of the current real estate tax assessment of the property or a current appraisal dated no earlier than 6 months prior to the date of the bond, prepared by a professional appraiser who certifies that the appraisal has been conducted in accordance with the generally accepted appraisal standards as reflected in the Uniform Standards of Professional Appraisal Practice, as promulgated by the Appraisal Foundation.

(End of clause)

52.228-14 IRREVOCABLE LETTER OF CREDIT (DEC 1999)

(a) ``Irrevocable letter of credit'' (ILC), as used in this clause, means a written commitment by a federally insured financial institution to pay all or part of a stated amount of money, until the expiration date of the letter, upon presentation by the Government (the beneficiary) of a written demand therefor. Neither the financial institution nor the offeror/Contractor can revoke or condition the letter of credit.

(b) If the offeror intends to use an ILC in lieu of a bid bond, or to secure other types of bonds such as performance and payment bonds, the letter of credit and letter of confirmation formats in paragraphs (e) and (f) of this clause shall be used.

(c) The letter of credit shall be irrevocable, shall require presentation of no document other than a written demand and the ILC (including confirming letter, if any), shall be issued/confirmed by an acceptable federally insured financial institution as provided in paragraph (d) of this clause, and--

(1) If used as a bid guarantee, the ILC shall expire no earlier than 60 days after the close of the bid acceptance period;

(2) If used as an alternative to corporate or individual sureties as security for a performance or payment bond, the offeror/Contractor may submit an ILC with an initial expiration date estimated to cover the entire period for which financial security is required or may submit an ILC with an initial expiration date that is a minimum period of one year from the date of issuance. The ILC shall provide that, unless the issuer provides the beneficiary written notice of non-renewal at least 60 days in advance of the current expiration date, the ILC is automatically extended without amendment for one year from the expiration date, or any future expiration date, until the period of required coverage is completed and the Contracting Officer provides the financial institution with a written statement waiving the right to payment. The period of required coverage shall be:

(i) For contracts subject to the Miller Act, the later of--

(A) One year following the expected date of final payment;

(B) For performance bonds only, until completion of any warranty period; or

(C) For payment bonds only, until resolution of all claims filed against the payment bond during the one-year period following final payment.

(ii) For contracts not subject to the Miller Act, the later of--

(A) 90 days following final payment; or

(B) For performance bonds only, until completion of any warranty period.

(d) Only federally insured financial institutions rated investment grade or higher shall issue or confirm the ILC. The offeror/Contractor shall provide the Contracting Officer a credit rating that indicates the financial institution has the required rating(s) as of the date of issuance of the ILC. Unless the financial institution issuing the ILC had letter of credit business of less than $25 million in the past year, ILCs over $5 million must be confirmed by another acceptable financial institution that had letter of credit business of less than $25 million in the past year.

(e) The following format shall be used by the issuing financial institution to create an ILC:

_____

[Issuing Financial Institution's Letterhead or Name and Address]

Issue Date _____

IRREVOCABLE LETTER OF CREDIT NO. _____

Account party's name _____

Account party's address _____

For Solicitation No. _____(for reference only)

TO: [U.S. Government agency]

[U.S. Government agency's address]

1. We hereby establish this irrevocable and transferable Letter of Credit in your favor for one or more drawings up to United States $_____. This Letter of Credit is payable at [issuing financial institution's and, if any, confirming financial institution's] office at [issuing financial institution's address and, if any, confirming financial institution's address] and expires with our close of business on _____, or any automatically extended expiration date.

2. We hereby undertake to honor your or the transferee's sight draft(s) drawn on the issuing or, if any, the confirming financial institution, for all or any part of this credit if presented with this Letter of Credit and confirmation, if any, at the office specified in paragraph 1 of this Letter of Credit on or before the expiration date or any automatically extended expiration date.

3. [This paragraph is omitted if used as a bid guarantee, and subsequent paragraphs are renumbered.] It is a condition of this Letter of Credit that it is deemed to be automatically extended without amendment for one year from the expiration date hereof, or any future expiration date, unless at least 60 days prior to any expiration date, we notify you or the transferee by registered mail, or other receipted means of delivery, that we elect not to consider this Letter of Credit renewed for any such additional period. At the time we notify you, we also agree to notify the account party (and confirming financial institution, if any) by the same means of delivery.

4. This Letter of Credit is transferable. Transfers and assignments of proceeds are to be effected without charge to either the beneficiary or the transferee/assignee of proceeds. Such transfer or assignment shall be only at the written direction of the Government (the beneficiary) in a form satisfactory to the issuing financial institution and the confirming financial institution, if any.

5. This Letter of Credit is subject to the Uniform Customs and Practice (UCP) for Documentary Credits, 1993 Revision, International Chamber of Commerce Publication No. 500, and to the extent not inconsistent therewith, to the laws of _____ [state of confirming financial institution, if any,

otherwise state of issuing financial institution].

6. If this credit expires during an interruption of business of this financial institution as described in Article 17 of the UCP, the financial institution specifically agrees to effect payment if this credit is drawn against within 30 days after the resumption of our business.

Sincerely,

_____

[Issuing financial institution]

(f) The following format shall be used by the financial institution to confirm an ILC:

_____
[Confirming Financial Institution's Letterhead or Name and Address]

(Date) _____

Our Letter of Credit Advice Number _____

Beneficiary: _____ [U.S. Government agency]

Issuing Financial Institution: _____

Issuing Financial Institution's LC No.: _____

Gentlemen:

1. We hereby confirm the above indicated Letter of Credit, the original of which is attached, issued by _____ [name of issuing financial institution] for drawings of up to United States dollars _____/U.S. $_____ and expiring with our close of business on _____ [the expiration date], or any automatically extended expiration date.

2. Draft(s) drawn under the Letter of Credit and this Confirmation are payable at our office located at _____.

3. We hereby undertake to honor sight draft(s) drawn under and presented with the Letter of Credit and this Confirmation at our offices as specified herein.

4. [This paragraph is omitted if used as a bid guarantee, and subsequent paragraphs are renumbered.] It is a condition of this confirmation that it be deemed automatically extended without amendment for one year from the expiration date hereof, or any automatically extended expiration date, unless:

(a) At least 60 days prior to any such expiration date, we shall notify the Contracting Officer, or the transferee and the issuing financial institution, by registered mail or other receipted means of delivery, that we elect not to consider this confirmation extended for any such additional period; or

(b) The issuing financial institution shall have exercised its right to notify you or the transferee, the account party, and ourselves, of its election not to extend the expiration date of the Letter of Credit.

5. This confirmation is subject to the Uniform Customs and Practice (UCP) for Documentary Credits, 1993 Revision, International Chamber of Commerce Publication No. 500, and to the extent not inconsistent therewith, to the laws of _____ [state of confirming financial institution].

6. If this confirmation expires during an interruption of business of this financial institution as described in

Article 17 of the UCP, we specifically agree to effect payment if this credit is drawn against within 30 days after the resumption of our business.

Sincerely,

_____

[Confirming financial institution]

(g) The following format shall be used by the Contracting Officer for a sight draft to draw on the Letter of Credit:

SIGHT DRAFT

_____

[City, State]

(Date) _____

[Name and address of financial institution]

Pay to the order of _____ [Beneficiary Agency] _____ the sum of United States $_____. This draft is drawn under Irrevocable Letter of Credit No. _____.

_____

[Beneficiary Agency]

By: _____

(End of clause)

52.228-15 PERFORMANCE AND PAYMENT BONDS--CONSTRUCTION (SEP 1996)-

(a) Definitions. As used in this clause--

Contract price means the award price of the contract or, for requirements contracts, the price payable for the estimated quantity; or for indefinite-delivery type contracts, the price payable for the specified minimum quantity.

(b) Unless the resulting contract price is $100,000 or less, the successful offeror shall be required to furnish performance and payment bonds to the Contracting Officer as follows:

(1) Performance Bonds (Standard Form 25): (i) The penal amount of performance bonds shall be 100 percent of the original contract price.

(ii) The Government may require additional performance bond protection when the contract price is increased. The increase in protection shall generally equal 100 percent of the increase in contract price.

(iii) The Government may secure additional protection by directing the Contractor to increase the penal amount of the existing bond or to obtain an additional bond.

(2) Payment Bonds (Standard Form 25-A):

(i) The penal amount of payment bonds shall equal--

(A) 50 percent of the contract price if the contract price is not more than $1 million;

(B) 40 percent of the contract price if the contract price is more than $1 million but not more than $5 million; or

(C) $2.5 million if the contract price is more than $5 million.

(ii) If the original contract price is $5 million or less, the Government may require additional protection if the contract price is increased. The penal amount of the total protection shall meet the requirement of subparagraph (b)(2)(i) of this clause.

(iii) The Government may secure additional protection by directing the Contractor to increase the penal sum of the existing bond or to obtain an additional bond.

(c) The Contractor shall furnish all executed bonds, including any necessary reinsurance agreements, to the Contracting Officer, within the time period specified in the Bid Guarantee provision of the solicitation, or otherwise specified by the Contracting Officer, but in any event, before starting work.

(d) The bonds shall be in the form of firm commitment, supported by corporate sureties whose names appear on the list contained in Treasury Department Circular 570, individual sureties, or by other acceptable security such as postal money order, certified check, cashier's check, irrevocable letter of credit, or, in accordance with Treasury Department regulations, certain bonds or notes of the United States. Treasury Circular 570 is published in the Federal Register, or may be obtained from the U.S. Department of Treasury, Financial Management Service, Surety Bond Branch, 401 14th Street, NW., 2nd Floor, West Wing, Washington, DC 20227.

52.228-4470 OFFER GUARANTEE (APR 1984)

(a) Failure to furnish an offer guarantee in the proper form and amount, by the time set for receipt of proposals, may be cause for rejection of the offer.

(b) The offeror shall furnish an offer guarantee in the form of a firm commitment, such as a bid bond, postal money order, certified check, cashier's check, irrevocable letter of credit, or under Treasury Department regulations, certain bonds or notes of the United States. The Contracting Officer will return offer guarantees, other than bid bonds, (1) to unsuccessful offeror upon execution of contractual documents and bonds (including any necessary coinsurance or reinsurance agreements), as required by the offer as accepted.

(c) If the successful offeror, upon acceptance of its offer by the Government within the period specified for acceptance, fails to execute all contractual documents or give a bond(s) as required by the solicitation within the time specified, the Contracting Officer may terminate the contract for default.

(d) Unless otherwise specified in the offer, the offeror will (1) allow 60 days for acceptance of its offer and (2) provide bond(s) within 14 days after receipt of the forms by the offeror.

(e) In the event that the contract is terminated for default, the offeror is liable for any cost of acquiring the work that exceeds the amount of its offer, and the offer

guarantee is available to offset the difference.

(End of clause)

(R 7-2003.25 1964 JUN)

52.229-3 FEDERAL, STATE, AND LOCAL TAXES (JAN 1991)

(a) "Contract date," as used in this clause, means the date set for bid opening or, if this is a negotiated contract or a modification, the effective date of this contract or modification.

"All applicable Federal, State, and local taxes and duties," as used in this clause, means all taxes and duties, in effect on the contract date, that the taxing authority is imposing and collecting on the transactions or property covered by this contract.

"After-imposed Federal tax," as used in this clause, means any new or increased Federal excise tax or duty, or tax that was exempted or excluded on the contract date but whose exemption was later revoked or reduced during the contract period, on the transactions or property covered by this contract that the Contractor is required to pay or bear as the result of legislative, judicial, or administrative action taking effect after the contract date. It does not include social security tax or other employment taxes.

"After-relieved Federal tax," as used in this clause, means any amount of Federal excise tax or duty, except social security or other employment taxes, that would otherwise have been payable on the transactions or property covered by this contract, but which the Contractor is not required to pay or bear, or for which the Contractor obtains a refund or drawback, as the result of legislative, judicial, or administrative action taking effect after the contract date.

(b) The contract price includes all applicable Federal, State, and local taxes and duties.

(c) The contract price shall be increased by the amount of any after-imposed Federal tax, provided the Contractor warrants in writing that no amount for such newly imposed Federal excise tax or duty or rate increase was included in the contract price, as a contingency reserve or otherwise.

(d) The contract price shall be decreased by the amount of any after-relieved Federal tax.

(e) The contract price shall be decreased by the amount of any Federal excise tax or duty, except social security or other employment taxes, that the Contractor is required to pay or bear, or does not obtain a refund of, through the Contractor's fault, negligence, or failure to follow instructions of the Contracting Officer.

(f) No adjustment shall be made in the contract price under this clause unless the amount of the adjustment exceeds $250.

(g) The Contractor shall promptly notify the Contracting Officer of all matters relating to any Federal excise tax or duty that reasonably may be expected to result in either an increase or decrease in the contract price and shall take appropriate action as the Contracting Officer directs.

(h) The Government shall, without liability, furnish evidence appropriate to establish exemption from any Federal, State, or local tax when the Contractor requests such evidence and a reasonable basis exists to sustain the exemption.

(End of clause)

52.229-5 TAXES--CONTRACTS PERFORMED IN U.S. POSSESSIONS OR PUERTO RICO (APR 1984)

The term "local taxes," as used in the Federal, State, and local taxes clause of this contract, includes taxes

imposed by a possession of the United States or by Puerto Rico.

(End of clause)

52.232-1 SVC PAYMENTS (APR 1984)

The Government shall pay the Contractor, upon the submission of proper invoices or vouchers, the prices stipulated in this contract for supplies delivered and accepted or services rendered and accepted, less any deductions provided in this contract. Unless otherwise specified in this contract, payment shall be made on partial deliveries accepted by the Government if--

(a) The amount due on the deliveries warrants it; or

(b) The Contractor requests it and the amount due on the deliveries is at least $1,000 or 50 percent of the total contract price.

52.232-5 C PAYMENTS UNDER FIXED-PRICE CONSTRUCTION CONTRACTS (MAY 1997)

(a) Payment of price. The Government shall pay the Contractor the contract price as provided in this contract.

(b) Progress payments. The Government shall make progress payments monthly as the work proceeds, or at more frequent intervals as determined by the Contracting Officer, on estimates of work accomplished which meets the standards of quality established under the contract, as approved by the Contracting Officer.

(1) The Contractor's request for progress payments shall include the following substantiation:

(i) An itemization of the amounts requested, related to the various elements of work required by the contract covered by the payment requested.

(ii) A listing of the amount included for work performed by each subcontractor under the contract.

(iii) A listing of the total amount of each subcontract under the contract.

(iv) A listing of the amounts previously paid to each such subcontractor under the contract.

(v) Additional supporting data in a form and detail required by the Contracting Officer.

(2) In the preparation of estimates, the Contracting Officer may authorize material delivered on the site and preparatory work done to be taken into consideration. Material delivered to the Contractor at locations other than the site also may be taken into consideration if--

(i) Consideration is specifically authorized by this contract; and

(ii) The Contractor furnishes satisfactory evidence that it has acquired title to such material and that the material will be used to perform this contract.

(c) Contractor certification. Along with each request for progress payments, the Contractor shall furnish the following certification, or payment shall not be made: (However, if the Contractor elects to delete paragraph (c)(4) from the certification, the certification is still acceptable.)

I hereby certify, to the best of my knowledge and belief, that--

(1) The amounts requested are only for performance in accordance with the specifications, terms, and conditions of the contract;

(2) Payments to subcontractors and suppliers have been made from previous payments received under the contract, and timely payments will be made from the proceeds of the payment covered by this certification, in accordance with subcontract agreements and the requirements of chapter 39 of Title 31, United States Code;

(3) This request for progress payments does not include any amounts which the prime contractor intends to withhold or retain from a subcontractor or supplier in accordance with the terms and conditions of the subcontract; and

(4) This certification is not to be construed as final acceptance of a subcontractor's performance.

_____

(Name)

_____

(Title)

_____

(Date)

(d) Refund of unearned amounts. If the Contractor, after making a certified request for progress payments, discovers that a portion or all of such request constitutes a payment for performance by the Contractor that fails to conform to the specifications, terms, and conditions of this contract (hereinafter referred to as the "unearned amount"), the Contractor shall--

(1) Notify the Contracting Officer of such performance deficiency; and

(2) Be obligated to pay the Government an amount (computed by the Contracting Officer in the manner provided in paragraph (j) of this clause) equal to interest on the unearned amount from the 8th day after the date of receipt of the unearned amount until--

(i) The date the Contractor notifies the Contracting Officer that the performance deficiency has been corrected; or

(ii) The date the Contractor reduces the amount of any subsequent certified request for progress payments by an amount equal to the unearned amount.

(e) Retainage. If the Contracting Officer finds that satisfactory progress was achieved during any period for which a progress payment is to be made, the Contracting Officer shall authorize payment to be made in full. However, if satisfactory progress has not been made, the Contracting Officer may retain a maximum of 10 percent of the amount of the payment until satisfactory progress is achieved. When the work is substantially complete, the Contracting Officer may retain from previously withheld funds and future progress payments that amount the Contracting Officer considers adequate for protection of the Government and shall release to the Contractor all the remaining withheld funds. Also, on completion and acceptance of each separate building, public work, or other division of the contract, for which the price is stated separately in the contract, payment shall be made for the completed work without retention of a percentage.

(f) Title, liability, and reservation of rights. All material and work covered by progress payments made shall, at the time of payment, become the sole property of the Government, but this shall not be construed as--

(1) Relieving the Contractor from the sole responsibility for all material and work upon which payments have been made or the restoration of any damaged work; or

(2) Waiving the right of the Government to require the fulfillment of all of the terms of the contract.

(g) Reimbursement for bond premiums. In making these progress payments, the Government shall, upon request, reimburse the Contractor for the amount of premiums paid for performance and payment bonds (including coinsurance and reinsurance agreements, when applicable) after the Contractor has furnished evidence of full payment to the surety. The retainage provisions in paragraph (e) of this clause shall not apply to that portion of progress payments attributable to bond premiums.

(h) Final payment. The Government shall pay the amount due the Contractor under this contract after--

(1) Completion and acceptance of all work;

(2) Presentation of a properly executed voucher; and

(3) Presentation of release of all claims against
the Government arising by virtue of this contract, other than claims, in stated amounts, that the Contractor has specifically excepted from the operation of the release. A release may also be required of the assignee if the Contractor's claim to amounts payable under this contract has been assigned under the Assignment of Claims Act of 1940 (31 U.S.C. 3727 and 41 U.S.C. 15).

(i) Limitation because of undefinitized work. Notwithstanding any provision of this contract, progress payments shall not exceed 80 percent on work accomplished on undefinitized contract actions. A "contract action" is any action resulting in a contract, as defined in FAR Subpart 2.1, including contract modifications for additional supplies or services, but not including contract modifications that are within the scope and under the terms of the contract, such as contract modifications issued pursuant to the Changes clause, or funding and other administrative changes.

(j) Interest computation on unearned amounts. In accordance with 31 U.S.C. 3903(c)(1), the amount payable under subparagraph (d)(2) of this clause shall be--

(1) Computed at the rate of average bond equivalent rates of 91-day Treasury bills auctioned at the most recent auction of such bills prior to the date the Contractor receives the unearned amount; and

(2) Deducted from the next available payment to the Contractor.

52.232-7 TM PAYMENTS UNDER TIME-AND-MATERIALS AND LABOR-HOUR CONTRACTS (MAR 2000)

The Government will pay the Contractor as follows upon the submission of invoices or vouchers approved by the Contracting Officer:

(a) Hourly rate. (1) The amounts shall be computed by multiplying the appropriate hourly rates prescribed in the Schedule by the number of direct labor hours performed. The rates shall include wages, indirect costs, general and administrative expense, and profit. Fractional parts of an hour shall be payable on a prorated basis. Vouchers may be submitted once each month (or at more frequent intervals, if approved by the Contracting Officer), to the Contracting Officer or designee. The Contractor shall substantiate vouchers by evidence of actual payment and by individual daily job timecards, or other substantiation approved by the Contracting Officer. Promptly after receipt of each substantiated voucher, the Government shall, except as otherwise provided in this contract, and subject to the terms of (e) below, pay the voucher as approved by the Contracting Officer.

(2) Unless otherwise prescribed in the Schedule, the Contracting Officer shall withhold 5 percent of

the amounts due under this paragraph (a), but the total amount withheld shall not exceed $50,000. The amounts withheld shall be retained until the execution and delivery of a release by the Contractor as provided in paragraph (f) below.

(3) Unless the Schedule prescribes otherwise, the hourly rates in the Schedule shall not be varied by virtue of the Contractor having performed work on an overtime basis. If no overtime rates are provided in the Schedule and overtime work is approved in advance by the Contracting Officer, overtime rates shall be negotiated. Failure to agree upon these overtime rates shall be treated as a dispute under the Disputes clause of this contract. If the Schedule provides rates for overtime, the premium portion of those rates will be reimbursable only to the extent the overtime is approved by the Contracting Officer.

(b) Materials and subcontracts. (1) The Contracting Officer will determine allowable costs of direct materials in accordance with Subpart 31.2 of the Federal Acquisition Regulation (FAR) in effect on the date of this contract. Direct materials, as used in this clause, are those materials that enter directly into the end product, or that are used or consumed directly in connection with the furnishing of the end product.

(2) The Contractor may include reasonable and allocable material handling costs in the charge for material to the extent they are clearly excluded from the hourly rate. Material handling costs are comprised of indirect costs, including, when appropriate, general and administrative expense allocated to direct materials in accordance with the Contractor's usual accounting practices consistent with Subpart 31.2 of the FAR.

(3) The Government will reimburse the Contractor for items and services purchased directly for the contract only when payments of cash, checks, or other forms of payment have been made for such purchased items or services.

(4)(i) The Government will reimburse the Contractor for costs of subcontracts that are authorized under the subcontracts clause of this contract, provided that the costs are consistent with paragraph (b)(5) of this clause.

(ii) The Government will limit reimbursable costs in connection with subcontracts to the amounts paid for items and services purchased directly for the contract only when the Contractor has made or will make payments of cash, checks, or other forms of payment to the subcontractor--

(A) In accordance with the terms and conditions of a subcontract or invoice; and

(B) Ordinarily prior to the submission of the Contractor's next payment request to the Government.

(iii) The Government will not reimburse the Contractor for any costs arising from the letting, administration, or supervision of performance of the subcontract, if the costs are included in the hourly rates payable under paragraph (a)(1) of this clause.

(5) To the extent able, the Contractor shall--

(i) Obtain materials at the most advantageous prices available with due regard to securing prompt delivery of satisfactory materials; and

(ii) Take all cash and trade discounts, rebates, allowances, credits, salvage, commissions, and other benefits. When unable to take advantage of the benefits, the Contractor shall promptly notify the Contracting Officer and give the reasons. The Contractor shall give credit to the Government for cash and trade discounts, rebates, scrap, commissions, and other amounts that have accrued to the benefit of the Contractor, or would have accrued except for the fault or neglect of the Contractor. The Contractor shall not deduct from gross costs the benefits lost without fault or neglect on the part of the Contractor, or lost through fault of the Government.

(c) Total cost. It is estimated that the total cost to the Government for the performance of this contract shall not exceed the ceiling price set forth in the Schedule and the Contractor agrees to use its best efforts to perform the work specified in the Schedule and all obligations under this contract within such ceiling price. If at any time the Contractor has reason to believe that the hourly rate payments and material costs that will accrue in performing this contract in the next succeeding 30 days, if added to all other payments and costs previously accrued, will exceed 85 percent of the ceiling price in the Schedule, the Contractor shall notify the Contracting Officer giving a revised estimate of the total price to the Government for performing this contract with supporting reasons and documentation. If at any time during performing this contract, the Contractor has reason to believe that the total price to the Government for performing this contract will be substantially greater or less than the then stated ceiling price, the Contractor shall so notify the Contracting Officer, giving a revised estimate of the total price for performing this contract, with supporting reasons and documentation. If at any time during performing this contract, the Government has reason to believe that the work to be required in performing this contract will be substantially greater or less than the stated ceiling price, the Contracting Officer will so advise the Contractor, giving the then revised estimate of the total amount of effort to be required under the contract.

(d) Ceiling price. The Government shall not be obligated to pay the Contractor any amount in excess of the ceiling price in the Schedule, and the Contractor shall not be obligated to continue performance if to do so would exceed the ceiling price set forth in the Schedule, unless and until the Contracting Officer shall have notified the Contractor in writing that the ceiling price has been increased and shall have specified in the notice a revised ceiling that shall constitute the ceiling price for performance under this contract. When and to the extent that the ceiling price set forth in the Schedule has been increased, any hours expended and material costs incurred by the Contractor in excess of the ceiling price before the increase shall be allowable to the same extent as if the hours expended and material costs had been incurred after the increase in the ceiling price.

(e) Audit. At any time before final payment under this contract the Contracting Officer may request audit of the invoices or vouchers and substantiating material. Each payment previously made shall be subject to reduction to the extent of amounts, on preceding invoices or vouchers, that are found by the Contracting Officer not to have been properly payable and shall also be subject to reduction for overpayments or to increase for underpayments. Upon receipt and approval of the voucher or invoice designated by the Contractor as the "completion voucher" or "completion invoice" and substantiating material, and upon compliance by the Contractor with all terms of this contract (including, without limitation, terms relating to patents and the terms of (f) and (g) below), the Government shall promptly pay any balance due the Contractor. The completion invoice or voucher, and substantiating material, shall be submitted by the Contractor as promptly as practicable following completion of the work under this contract, but in no event later than 1 year (or such longer period as the Contracting Officer may approve in writing) from the date of completion.

(f) Assignment. The Contractor, and each assignee under an assignment entered into under this contract and in effect at the time of final payment under this contract, shall execute and deliver, at the time of and as a condition precedent to final payment under this contract, a release discharging the Government, its officers, agents, and employees of and from all liabilities, obligations, and claims arising out of or under this contract, subject only to the following exceptions:

(1) Specified claims in stated amounts, or in estimated amounts if the amounts are not susceptible of exact statement by the Contractor.

(2) Claims, together with reasonable incidental expenses, based upon the liabilities of the Contractor to third parties arising out of performing this contract, that are not known to the Contractor on the date of the execution of the release, and of which the Contractor gives notice in writing to the Contracting Officer not more than 6 years after the date of the release or the date of any notice to the Contractor that the Government is prepared to make final payment, whichever is earlier.

(3) Claims for reimbursement of costs (other than expenses of the Contractor by reason of its indemnification of the Government against patent liability), including reasonable incidental expenses, incurred by the Contractor under the terms of this contract relating to patents.

(g) Refunds. The Contractor agrees that any refunds, rebates, or credits (including any related interest) accruing to or received by the Contractor or any assignee, that arise under the materials portion of this contract and for which the Contractor has received reimbursement, shall be paid by the Contractor to the Government. The Contractor and each assignee, under an assignment entered into under this contract and in effect at the time of final payment under this contract, shall execute and deliver, at the time of and as a condition precedent to final payment under this contract, an assignment to the Government of such refunds, rebates, or credits (including any interest) in form and substance satisfactory to the Contracting Officer.

52.232-8 SVC DISCOUNTS FOR PROMPT PAYMENT (MAY 1997)

(a) Discounts for prompt payment will not be considered in the evaluation of offers. However, any offered discount will form a part of the award, and will be taken if payment is made within the discount period indicated in the offer by the offeror. As an alternative to offering a prompt payment discount in conjunction with the offer, offerors awarded contracts may include prompt payment discounts on individual invoices.

(b) In connection with any discount offered for prompt payment, time shall be computed from the date of the invoice. If the Contractor has not placed a date on the invoice, the due date shall be calculated from the date the designated billing office receives a proper invoice, provided the agency annotates such invoice with the date of receipt at the time of receipt. For the purpose of computing the discount earned, payment shall be considered to have been made on the date that appears on the payment check or, for an electronic funds transfer, the specified payment date. When the discount date falls on a Saturday, Sunday, or legal holiday when Federal Government offices are closed and Government business is not expected to be conducted, payment may be made on the following business day.

52.232-9 SVC & TM LIMITATION ON WITHHOLDING OF PAYMENTS (APR 1984)

If more than one clause or Schedule term of this contract authorizes the temporary withholding of amounts otherwise payable to the Contractor for supplies delivered or services performed, the total of the amounts withheld at any one time shall not exceed the greatest amount that may be withheld under any one clause or Schedule term at that time; provided, that this limitation shall not apply to--

(a) Withholdings pursuant to any clause relating to wages or hours of employees;

(b) Withholdings not specifically provided for by this contract;

(c) The recovery of overpayments; and

(d) Any other withholding for which the Contracting Officer determines that this limitation is inappropriate.

52.232-11 SVC EXTRAS (APR 1984)

Except as otherwise provided in this contract, no payment for extras shall be made unless such extras and the price therefore have been authorized in writing by the Contracting Officer.

52.232-17 INTEREST (JUNE 1996)

(a) Except as otherwise provided in this contract under a Price Reduction for Defective Cost or Pricing

Data clause or a Cost Accounting Standards clause, all amounts that become payable by the Contractor to the Government under this contract (net of any applicable tax credit under the Internal Revenue Code (26 U.S.C. 1481)) shall bear simple interest from the date due until paid unless paid within 30 days of becoming due. The interest rate shall be the interest rate established by the Secretary of the Treasury as provided in Section 12 of the Contract Disputes Act of 1978 (Public Law 95-563), which is applicable to the period in which the amount becomes due, as provided in paragraph (b) of this clause, and then at the rate applicable for each six-month period as fixed by the Secretary until the amount is paid. reproduce, prepare derivative works, distribute copies to the public, and (b) Amounts shall be due at the earliest of the following dates:

(1) The date fixed under this contract.

(2) The date of the first written demand for payment consistent with this contract, including any demand resulting from a default termination.

(3) The date the Government transmits to the Contractor a proposed supplemental agreement to confirm completed negotiations establishing the amount of debt.

(4) If this contract provides for revision of prices, the date of written notice to the Contractor stating the amount of refund payable in connection with a pricing proposal or a negotiated pricing agreement not confirmed by contract modification.

(c) The interest charge made under this clause may be reduced under the procedures prescribed in 32.614-2 of the Federal Acquisition Regulation in effect on the date of this contract.

52.232-23 ASSIGNMENT OF CLAIMS (JAN 1986) - ALTERNATE I (APR 1984)

(a) The Contractor, under the Assignment of Claims Act, as amended, 31 U.S.C. 3727, 41 U.S.C. 15 (hereafter referred to as "the Act"), may assign its rights to be paid amounts due or to become due as a result of the performance of this contract to a bank, trust company, or other financing institution, including any Federal lending agency. The assignee under such an assignment may thereafter further assign or reassign its right under the original assignment to any type of financing institution described in the preceding sentence. Unless otherwise stated in this contract, payments to an assignee of any amounts due or to become due under this contract shall not, to the extent specified in the Act, be subject to reduction or setoff.

(b) Any assignment or reassignment authorized under the Act and this clause shall cover all unpaid amounts payable under this contract, and shall not be made to more than one party, except that an assignment or reassignment may be made to one party as agent or trustee for two or more parties participating in the financing of this contract.

(c) The Contractor shall not furnish or disclose to any assignee under this contract any classified document (including this contract) or information related to work under this contract until the Contracting Officer authorizes such action in writing.

52.232-25 SVC PROMPT PAYMENT (JUN 1997)

Notwithstanding any other payment clause in this contract, the Government will make invoice payments and contract financing payments under the terms and conditions specified in this clause. Payment shall be considered as being made on the day a check is dated or the date of an electronic funds transfer. Definitions of pertinent terms are set forth in section 32.902 of the Federal Acquisition Regulation. All days referred to in this clause are calendar days, unless otherwise specified. (However, see subparagraph (a)(4) of this clause concerning payments due on Saturdays, Sundays, and legal holidays.)

(a) Invoice payments. (1) Due date–(i) Except as indicated in subparagraph (a)(2) and paragraph (c) of this clause, the due date for making invoice payments by the designated payment office shall be the later of the following two events:

(A) The 30th day after the designated billing office has received a proper invoice from the Contractor (except as provided in subdivision (a)(1)(ii) of this clause).

(B) The 30th day after Government acceptance of supplies delivered or services performed by the Contractor. On a final invoice where the payment amount is subject to contract settlement actions, acceptance shall be deemed to have occurred on the effective date of the contract settlement.

(ii) If the designated billing office fails to annotate the invoice with the actual date of receipt at the time of receipt, the invoice payment due date shall be the 30th day after the date of the Contractor's invoice; provided a proper invoice is received and there is no disagreement over quantity, quality, or Contractor compliance with contract requirements.

(2) Certain food products and other payments. (i) Due dates on Contractor invoices for meat, meat food products, or fish; perishable agricultural commodities; and dairy products, edible fats or oils, and food products prepared from edible fats or oils are--

(A) For meat or meat food products, as defined in section 2(a)(3) of the Packers and Stockyard Act of 1921 (7 U.S.C. 182(3)), and as further defined in Pub. L. 98-181, including any edible fresh or frozen poultry meat, any perishable poultry meat food product, fresh eggs, and any perishable egg product, as close as possible to, but not later than, the 7th day after product delivery.

(B) For fresh or frozen fish, as defined in section 204(3) of the Fish and Seafood Promotion Act of 1986 (16 U.S.C. 4003(3)), as close as possible to, but not later than, the 7th day after product delivery.

(C) For perishable agricultural commodities, as defined in section 1(4) of the Perishable Agricultural Commodities Act of 1930 (7 U.S.C. 499a(4)), as close as possible to, but not later than, the 10th day after product delivery, unless another date is specified in the contract.

(D) For dairy products, as defined in section 111(e) of the Dairy Production Stabilization Act of 1983 (7 U.S.C. 4502(e)), edible fats or oils, and food products prepared from edible fats or oils, as close as possible to, but not later than, the 10th day after the date on which a proper invoice has been received. Liquid milk, cheese, certain processed cheese products, butter, yogurt, ice cream, mayonnaise, salad dressings, and other similar products, fall within this classification. Nothing in the Act limits this classification to refrigerated products. When questions arise regarding the proper classification of a specific product, prevailing industry practices will be followed in specifying a contract payment due date. The burden of proof that a classification of a specific product is, in fact, prevailing industry practice is upon the Contractor making the representation.

(ii) If the contract does not require submission of an invoice for payment (e.g., periodic lease payments), the due date will be as specified in the contract.

(3) Contractor's invoice. The Contractor shall prepare and submit invoices to the designated billing office specified in the contract. A proper invoice must include the items listed in subdivisions (a)(3)(i) through (a)(3)(viii) of this clause. If the invoice does not comply with these requirements, it shall be returned within 7 days after the date the designated billing office received the invoice (3 days for meat, meat food products, or fish; 5 days for perishable agricultural commodities, edible fats or oils, and food products prepared from edible fats or oils), with a statement of the reasons why it is not a proper invoice. Untimely notification will be taken into account in computing any interest penalty owed the Contractor in the manner described in subparagraph (a)(5) of this clause.

(i) Name and address of the Contractor.

(ii) Invoice date. (The Contractor is encouraged to date invoices as close as possible to the date of the mailing or transmission.)

(iii) Contract number or other authorization for supplies delivered or services performed (including order number and contract line item number).

(iv) Description, quantity, unit of measure, unit price, and extended price of supplies delivered or services performed.

(v) Shipping and payment terms (e.g., shipment number and date of shipment, prompt payment discount terms). Bill of lading number and weight of shipment will be shown for shipments on Government bills of lading.

(vi) Name and address of Contractor official to whom payment is to be sent (must be the same as that in the contract or in a proper notice of assignment).

(vii) Name (where practicable), title, phone number, and mailing address of person to be notified in the event of a defective invoice.

(viii) Any other information or documentation required by the contract (such as evidence of shipment).

(ix) While not required, the Contractor is strongly encouraged to assign an identification number to each invoice.

(4) Interest penalty. An interest penalty shall be paid automatically by the designated payment office, without request from the Contractor, if payment is not made by the due date and the conditions listed in subdivisions (a)(4)(i) through (a)(4)(iii) of this clause are met, if applicable. However, when the due date falls on a Saturday, Sunday, or legal holiday when Federal Government offices are closed and Government business is not expected to be conducted, payment may be made on the following business day without incurring a late payment interest penalty.

(i) A proper invoice was received by the designated billing office.

(ii) A receiving report or other Government documentation authorizing payment was processed, and there was no disagreement over quantity, quality, or Contractor compliance with any contract term or condition.

(iii) In the case of a final invoice for any balance of funds due the Contractor for supplies delivered or services performed, the amount was not subject to further contract settlement actions between the Government and the Contractor.

(5) Computing penalty amount. The interest penalty shall be at the rate established by the Secretary of the Treasury under section 12 of the Contract Disputes Act of 1978 (41 U.S.C. 611) that is in effect on the day after the due date, except where the interest penalty is prescribed by other governmental authority (e.g., tariffs). This rate is referred to as the "Renegotiation Board Interest Rate," and it is published in the Federal Register semiannually on or about January 1 and July 1. The interest penalty shall accrue daily on the invoice principal payment amount approved by the Government until the payment date of such approved principal amount; and will be compounded in 30-day increments inclusive from the first day after the due date through the payment date. That is, interest accrued at the end of any 30-day period will be added to the approved invoice principal payment amount and will be subject to interest penalties if not paid in the succeeding 30-day period. If the designated billing office failed to notify the Contractor of a defective invoice within the periods prescribed in subparagraph (a)(3) of this clause, the due date on the corrected invoice will be adjusted by subtracting from such date the number of days taken beyond the prescribed notification of defects period. Any interest penalty owed the Contractor will be based on this adjusted due date. Adjustments will be made by the designated payment office for errors in calculating interest penalties.

(i) For the sole purpose of computing an interest penalty that might be due the Contractor, Government acceptance shall be deemed to have occurred constructively on the 7th day (unless otherwise specified in this contract) after the Contractor delivered the supplies or performed the services in accordance with the terms and conditions of the contract, unless there is a disagreement over quantity, quality, or Contractor compliance with a contract provision. In the event that actual acceptance occurs within the constructive acceptance period, the determination of an interest penalty shall be based on the actual date of acceptance. The constructive acceptance requirement does not, however, compel Government officials to accept supplies or services, perform contract administration functions, or make payment prior to fulfilling their responsibilities.

(ii) The following periods of time will not be included in the determination of an interest penalty:

(A) The period taken to notify the Contractor of defects in invoices submitted to the Government, but this may not exceed 7 days (3 days for meat, meat food products, or fish; 5 days for perishable agricultural commodities, dairy products, edible fats or oils, and food products prepared from edible fats or oils).

(B) The period between the defects notice and resubmission of the corrected invoice by the Contractor.

(C) For incorrect electronic funds transfer (EFT) information, in accordance with the EFT clause of this contract.

(iii) Interest penalties will not continue to accrue after the filing of a claim for such penalties under the clause at 52.233-1, Disputes, or for more than 1 year. Interest penalties of less than $1 need not be paid.

(iv) Interest penalties are not required on payment delays due to disagreement between the Government and the Contractor over the payment amount or other issues involving contract compliance or on amounts temporarily withheld or retained in accordance with the terms of the contract. Claims involving disputes, and any interest that may be payable, will be resolved in accordance with the clause at 52.233-1, Disputes.

(6) Prompt payment discounts. An interest penalty also shall be paid automatically by the designated payment office, without request from the Contractor, if a discount for prompt payment is taken improperly. The interest penalty will be calculated as described in subparagraph (a)(5) of this clause on the amount of discount taken for the period beginning with the first day after the end of the discount period through the date when the Contractor is paid.

(7) Additional interest penalty. (i) If this contract was awarded on or after October 1, 1989, a penalty amount, calculated in accordance with subdivision (a)(7)(iii) of this clause, shall be paid in addition to the interest penalty amount if the Contractor--

(A) Is owed an interest penalty of $1 or more;

(B) Is not paid the interest penalty within 10 days after the date the invoice amount is paid; and

(C) Makes a written demand to the designated payment office for additional penalty payment, in accordance with subdivision (a)(7)(ii) of this clause, postmarked not later than 40 days after the invoice amount is paid.

(ii)(A) Contractors shall support written demands for additional penalty payments with the following data. No additional data shall be required. Contractors shall--

(1) Specifically assert that late payment interest is due under a specific invoice, and request payment of all overdue late payment interest penalty and such additional penalty as may be required;

(2) Attach a copy of the invoice on which the unpaid late payment interest was due; and

(3) State that payment of the principal has been received, including the date of receipt.

(B) Demands must be postmarked on or before the 40th day after payment was made, except that--

(1) If the postmark is illegible or nonexistent, the demand must have been received and annotated with the date of receipt by the designated payment office on or before the 40th day after payment was made; or

(2) If the postmark is illegible or nonexistent and the designated payment office fails to make the required annotation, the demand's validity will be determined by the date the Contractor has placed on the demand; provided such date is no later than the 40th day after payment was made.

(iii)(A) The additional penalty shall be equal to 100 percent of any original late payment interest penalty, except--

(1) The additional penalty shall not exceed $5,000;

(2) The additional penalty shall never be less than $25; and

(3) No additional penalty is owed if the amount of the underlying interest penalty is less than $1.

(B) If the interest penalty ceases to accrue in accordance with the limits stated in subdivision (a)(5)(iii) of this clause, the amount of the additional penalty shall be calculated on the amount of interest penalty that would have accrued in the absence of these limits, subject to the overall limits on the additional penalty specified in subdivision (a)(7)(iii)(A) of this clause.

(C) For determining the maximum and minimum additional penalties, the test shall be the interest penalty due on each separate payment made for each separate contract. The maximum and minimum additional penalty shall not be based upon individual invoices unless the invoices are paid separately. Where payments are consolidated for disbursing purposes, the maximum and minimum additional penalty determination shall be made separately for each contract therein.

(D) The additional penalty does not apply to payments regulated by other Government regulations (e.g., payments under utility contracts subject to tariffs and regulation).

(b) Contract financing payments. (1) Due dates for recurring financing payments. If this contract provides for contract financing, requests for payment shall be submitted to the designated billing office as specified in this contract or as directed by the Contracting Officer. Contract financing payments shall be made on the [insert day as prescribed by Agency head; if not prescribed, insert 30th day] day after receipt of a proper contract financing request by the designated billing office. In the event that an audit or other review of a specific financing request is required to ensure compliance with the terms and conditions of the contract, the designated payment office is not compelled to make payment by the due date specified.

(2) Due dates for other contract financing. For advance payments, loans, or other arrangements that do not involve recurring submissions of contract financing requests, payment shall be made in accordance with the corresponding contract terms or as directed by the Contracting Officer.

(3) Interest penalty not applicable. Contract financing payments shall not be assessed an interest penalty for payment delays.

(c) Fast payment procedure due dates. If this contract contains the clause at 52.213-1, Fast Payment Procedure, payments will be made within 15 days after the date of receipt of the invoice.

52.232-27 C PROMPT PAYMENT FOR CONSTRUCTION CONTRACTS (JUN 1997)

Notwithstanding any other payment terms in this contract, the Government will make invoice payments and contract financing payments under the terms and conditions specified in this clause. Payment shall be considered as being made on the day a check is dated or the date of an electronic funds transfer. Definitions

of pertinent terms are set forth in section 32.902 of the Federal Acquisition Regulation. All days referred to in this clause are calendar days, unless otherwise specified. (However, see subparagraph (a)(3) concerning payments due on Saturdays, Sundays, and legal holidays.)

(a) Invoice payments. (1) Types of invoice payments. For purposes of this clause, there are several types of invoice payments that may occur under this contract, as follows:

(i) Progress payments, if provided for elsewhere in this contract, based on Contracting Officer approval of the estimated amount and value of work or services performed, including payments for reaching milestones in any project:

(A) The due date for making such payments shall be 14 days after receipt of the payment request by the designated billing office. If the designated billing office fails to annotate the payment request with the actual date of receipt at the time of receipt, the payment due date shall be the 14th day after the date of the Contractor's payment request, provided a proper payment request is received and there is no disagreement over quantity, quality, or Contractor compliance with contract requirements.

(B) The due date for payment of any amounts retained by the Contracting Officer in accordance with the clause at 52.232-5, Payments Under Fixed-Price Construction Contracts, shall be as specified in the contract or, if not specified, 30 days after approval for release to the Contractor by the Contracting Officer.

(ii) Final payments based on completion and acceptance of all work and presentation of release of all claims against the Government arising by virtue of the contract, and payments for partial deliveries that have been accepted by the Government (e.g., each separate building, public work, or other division of the contract for which the price is stated separately in the contract):

(A) The due date for making such payments shall be either the 30th day after receipt by the designated billing office of a proper invoice from the Contractor, or the 30th day after Government acceptance of the work or services completed by the Contractor, whichever is later. If the designated billing office fails to annotate the invoice with the date of actual receipt at the time of receipt, the invoice payment due date shall be the 30th day after the date of the Contractor's invoice, provided a proper invoice is received and there is no disagreement over quantity, quality, or Contractor compliance with contract requirements.

(B) On a final invoice where the payment amount is subject to contract settlement actions (e.g., release of claims), acceptance shall be deemed to have occurred on the effective date of the contract settlement.

(2) Contractor's invoice. The Contractor shall prepare and submit invoices to the designated billing office specified in the contract. A proper invoice must include the items listed in subdivisions (a)(2)(i) through (a)(2)(ix) of this clause. If the invoice does not comply with these requirements, it shall be returned within 7 days after the date the designated billing office received the invoice, with a statement of the reasons why it is not a proper invoice. Untimely notification will be taken into account in computing any interest penalty owed the Contractor in the manner described in subparagraph (a)(4) of this clause.

(i) Name and address of the Contractor.

(ii) Invoice date. (The Contractor is encouraged to date invoices as close as possible to the date of mailing or transmission.)

(iii) Contract number or other authorization for work or services performed (including order number and contract line item number).

(iv) Description of work or services performed.

(v) Delivery and payment terms (e.g., prompt payment discount terms).

(vi) Name and address of Contractor official to whom payment is to be sent (must be the same as that in the

contract or in a proper notice of assignment).

(vii) Name (where practicable), title, phone number, and mailing address of person to be notified in the event of a defective invoice.

(viii) For payments described in subdivision (a)(1)(i) of this clause, substantiation of the amounts requested and certification in accordance with the requirements of the clause at 52.232-5, Payments Under Fixed-Price Construction Contracts.

(ix) Any other information or documentation required by the contract.

(x) While not required, the Contractor is strongly encouraged to assign an identification number to each invoice.

(3) Interest penalty. An interest penalty shall be paid automatically by the designated payment office, without request from the Contractor, if payment is not made by the due date and the conditions listed in subdivisions (a)(3)(i) through (a)(3)(iii) of this clause are met, if applicable. However, when the due date falls on a Saturday, Sunday, or legal holiday when Federal Government offices are closed and Government business is not expected to be conducted, payment may be made on the following business day without incurring a late payment interest penalty.

(i) A proper invoice was received by the designated billing office.

(ii) A receiving report or other Government documentation authorizing payment was processed and there was no disagreement over quantity, quality, Contractor compliance with any contract term or condition, or requested progress payment amount.

(iii) In the case of a final invoice for any balance of funds due the Contractor for work or services performed, the amount was not subject to further contract settlement actions between the Government and the Contractor.

(4) Computing penalty amount. The interest penalty shall be at the rate established by the Secretary of the Treasury under section 12 of the Contract Disputes Act of 1978 (41 U.S.C. 611) that is in effect on the day after the due date, except where the interest penalty is prescribed by other governmental authority (e.g., tariffs). This rate is referred to as the "Renegotiation Board Interest Rate," and it is published in the Federal Register semiannually on or about January 1 and July 1. The interest penalty shall accrue daily on the invoice principal payment amount approved by the Government until the payment date of such approved principal amount; and will be compounded in 30-day increments inclusive from the first day after the due date through the payment date. That is, interest accrued at the end of any 30-day period will be added to the approved invoice principal payment amount and will be subject to interest penalties if not paid in the succeeding 30-day period. If the designated billing office failed to notify the Contractor of a defective invoice within the periods prescribed in subparagraph (a)(2) of this clause, the due date on the corrected invoice will be adjusted by subtracting from such date the number of days taken beyond the prescribed notification of defects period. Any interest penalty owed the Contractor will be based on this adjusted due date. Adjustments will be made by the designated payment office for errors in calculating interest penalties.

(i) For the sole purpose of computing an interest penalty that might be due the Contractor for payments described in subdivision (a)(1)(ii) of this clause, Government acceptance or approval shall be deemed to have occurred constructively on the 7th day after the Contractor has completed the work or services in accordance with the terms and conditions of the contract. In the event that actual acceptance or approval occurs within the constructive acceptance or approval period, the determination of an interest penalty shall be based on the actual date of acceptance or approval. Constructive acceptance or constructive approval requirements do not apply if there is a disagreement over quantity, quality, or Contractor compliance with a contract provision. These requirements also do not compel Government officials to accept work or services, approve Contractor estimates, perform contract administration functions, or make payment prior to fulfilling their responsibilities.

(ii) The following periods of time will not be included in the determination of an interest penalty:

(A) The period taken to notify the Contractor of defects in invoices submitted to the Government, but this may not exceed 7 days.

(B) The period between the defects notice and resubmission of the corrected invoice by the Contractor.

(C) For incorrect electronic funds transfer (EFT) information, in accordance with the EFT clause of this contract.

(iii) Interest penalties will not continue to accrue after the filing of a claim for such penalties under the clause at 52.233-1, Disputes, or for more than 1 year. Interest penalties of less than $1 need not be paid.

(iv) Interest penalties are not required on payment delays due to disagreement between the Government and the Contractor over the payment amount or other issues involving contract compliance, or on amounts temporarily withheld or retained in accordance with the terms of the contract. Claims involving disputes, and any interest that may be payable, will be resolved in accordance with the clause at 52.233-1, Disputes.

(5) Prompt payment discounts. An interest penalty also shall be paid automatically by the designated payment office, without request from the Contractor, if a discount for prompt payment is taken improperly. The interest penalty will be calculated on the amount of discount taken for the period beginning with the first day after the end of the discount period through the date when the Contractor is paid.

(6) Additional interest penalty. (i) If this contract was awarded on or after October 1, 1989, a penalty amount, calculated in accordance with subdivision (a)(6)(iii) of this clause, shall be paid in addition to the interest penalty amount if the Contractor--

(A) Is owed an interest penalty of $1 or more;

(B) Is not paid the interest penalty within 10 days after the date the invoice amount is paid; and

(C) Makes a written demand to the designated payment office for additional penalty payment, in accordance with subdivision (a)(6)(ii) of this clause, postmarked not later than 40 days after the date the invoice amount is paid.

(ii)(A) Contractors shall support written demands for additional penalty payments with the following data. No additional data shall be required. Contractors shall--

(1) Specifically assert that late payment interest is due under a specific invoice, and request payment of all overdue late payment interest penalty and such additional penalty as may be required;

(2) Attach a copy of the invoice on which the unpaid late payment interest was due; and

(3) State that payment of the principal has been received, including the date of receipt.

(B) Demands must be postmarked on or before the 40th day after payment was made, except that--

(1) If the postmark is illegible or nonexistent, the demand must have been received and annotated with the date of receipt by the designated payment office on or before the 40th day after payment was made; or

(2) If the postmark is illegible or nonexistent and the designated payment office fails to make the required annotation, the demand's validity will be determined by the date the Contractor has placed on the demand; provided such date is no later than the 40th day after payment was made.

(iii)(A) The additional penalty shall be equal to 100 percent of any original late payment interest penalty,

except--

(1) The additional penalty shall not exceed $5,000;

(2) The additional penalty shall never be less than $25; and

(3) No additional penalty is owed if the amount of the underlying interest penalty is less than $1.

(B) If the interest penalty ceases to accrue in accordance with the limits stated in subdivision (a)(4)(iii) of this clause, the amount of the additional penalty shall be calculated on the amount of interest penalty that would have accrued in the absence of these limits, subject to the overall limits on the additional penalty specified in subdivision (a)(6)(iii)(A) of this clause.

(C) For determining the maximum and minimum additional penalties, the test shall be the interest penalty due on each separate payment made for each separate contract. The maximum and minimum additional penalty shall not be based upon individual invoices unless the invoices are paid separately. Where payments are consolidated for disbursing purposes, the maximum and minimum additional penalty determination shall be made separately for each contract therein.

(D) The additional penalty does not apply to payments regulated by other Government regulations (e.g., payments under utility contracts subject to tariffs and regulation).

(b) Contract financing payments. (1) Due dates for recurring financing payments. If this contract provides for contract financing, requests for payment shall be submitted to the designated billing office as specified in this contract or as directed by the Contracting Officer. Contract financing payments shall be made on the N/A day after receipt of a proper contract financing request by the designated billing office. In the event that an audit or other review of a specific financing request is required to ensure compliance with the terms and conditions of the contract, the designated payment office is not compelled to make payment by the due date specified.

(2) Due dates for other contract financing. For advance payments, loans, or other arrangements that do not involve recurring submissions of contract financing requests, payment shall be made in accordance with the corresponding contract terms or as directed by the Contracting Officer.

(3) Interest penalty not applicable. Contract financing payments shall not be assessed an interest penalty for payment delays.

(c) Subcontract clause requirements. The Contractor shall include in each subcontract for property or services (including a material supplier) for the purpose of performing this contract the following:

(1) Prompt payment for subcontractors. A payment clause that obligates the Contractor to pay the subcontractor for satisfactory performance under its subcontract not later than 7 days from receipt of payment out of such amounts as are paid to the Contractor under this contract.

(2) Interest for subcontractors. An interest penalty clause that obligates the Contractor to pay to the subcontractor an interest penalty for each payment not made in accordance with the payment clause--

(i) For the period beginning on the day after the required payment date and ending on the date on which payment of the amount due is made; and

(ii) Computed at the rate of interest established by the Secretary of the Treasury, and published in the Federal Register, for interest payments under section 12 of the Contract Disputes Act of 1978 (41 U.S.C. 611) in effect at the time the Contractor accrues the obligation to pay an interest penalty.

(3) Subcontractor clause flowdown. A clause requiring each subcontractor to include a payment clause and an interest penalty clause conforming to the standards set forth in subparagraphs (c)(1) and (c)(2) of this

clause in each of its subcontracts, and to require each of its subcontractors to include such clauses in their subcontracts with each lower-tier subcontractor or supplier.

(d) Subcontract clause interpretation. The clauses required by paragraph (c) of this clause shall not be construed to impair the right of the Contractor or a subcontractor at any tier to negotiate, and to include in their subcontract, provisions that--

(1) Retainage permitted. Permit the Contractor or a subcontractor to retain (without cause) a specified percentage of each progress payment otherwise due to a subcontractor for satisfactory performance under the subcontract without incurring any obligation to pay a late payment interest penalty, in accordance with terms and conditions agreed to by the parties to the subcontract, giving such recognition as the parties deem appropriate to the ability of a subcontractor to furnish a performance bond and a payment bond;

(2) Withholding permitted. Permit the Contractor or subcontractor to make a determination that part or all of the subcontractor's request for payment may be withheld in accordance with the subcontract agreement; and

(3) Withholding requirements. Permit such withholding without incurring any obligation to pay a late payment penalty if--

(i) A notice conforming to the standards of paragraph (g) of this clause previously has been furnished to the subcontractor; and

(ii) A copy of any notice issued by a Contractor pursuant to subdivision (d)(3)(i) of this clause has been furnished to the Contracting Officer.

(e) Subcontractor withholding procedures. If a Contractor, after making a request for payment to the Government but before making a payment to a subcontractor for the subcontractor's performance covered by the payment request, discovers that all or a portion of the payment otherwise due such subcontractor is subject to withholding from the subcontractor in accordance with the subcontract agreement, then the Contractor shall--

(1) Subcontractor notice. Furnish to the subcontractor a notice conforming to the standards of paragraph (g) of this clause as soon as practicable upon ascertaining the cause giving rise to a withholding, but prior to the due date for subcontractor payment;

(2) Contracting Officer notice. Furnish to the Contracting Officer, as soon as practicable, a copy of the notice furnished to the subcontractor pursuant to subparagraph (e)(1) of this clause;

(3) Subcontractor progress payment reduction. Reduce the subcontractor's progress payment by an amount not to exceed the amount specified in the notice of withholding furnished under subparagraph (e)(1) of this clause;

(4) Subsequent subcontractor payment. Pay the subcontractor as soon as practicable after the correction of the identified subcontract performance deficiency, and--

(i) Make such payment within--

(A) Seven days after correction of the identified subcontract performance deficiency (unless the funds therefor must be recovered from the Government because of a reduction under subdivision (e)(5)(i)) of this clause; or

(B) Seven days after the Contractor recovers such funds from the Government; or

(ii) Incur an obligation to pay a late payment interest penalty computed at the rate of interest established by the Secretary of the Treasury, and published in the Federal Register, for interest payments under section 12

of the Contracts Disputes Act of 1978 (41 U.S.C. 611) in effect at the time the Contractor accrues the obligation to pay an interest penalty;

(5) Notice to Contracting Officer. Notify the Contracting Officer upon--

(i) Reduction of the amount of any subsequent certified application for payment; or

(ii) Payment to the subcontractor of any withheld amounts of a progress payment, specifying--

(A) The amounts withheld under subparagraph (e)(1) of this clause; and

(B) The dates that such withholding began and ended; and

(6) Interest to Government. Be obligated to pay to the Government an amount equal to interest on the withheld payments (computed in the manner provided in 31 U.S.C. 3903(c)(1)), from the 8th day after receipt of the withheld amounts from the Government until--

(i) The day the identified subcontractor performance deficiency is corrected; or

(ii) The date that any subsequent payment is reduced under subdivision (e)(5)(i) of this clause.

(f) Third-party deficiency reports. (1) Withholding from subcontractor. If a Contractor, after making payment to a first-tier subcontractor, receives from a supplier or subcontractor of the first-tier subcontractor (hereafter referred to as a "second-tier subcontractor") a written notice in accordance with section 2 of the Act of August 24, 1935 (40 U.S.C. 270b, Miller Act), asserting a deficiency in such first-tier subcontractor's performance under the contract for which the Contractor may be ultimately liable, and the Contractor determines that all or a portion of future payments otherwise due such first-tier subcontractor is subject to withholding in accordance with the subcontract agreement, the Contractor may, without incurring an obligation to pay an interest penalty under subparagraph (e)(6) of this clause--

(i) Furnish to the first-tier subcontractor a notice conforming to the standards of paragraph (g) of this clause as soon as practicable upon making such determination; and

(ii) Withhold from the first-tier subcontractor's next available progress payment or payments an amount not to exceed the amount specified in the notice of withholding furnished under subdivision (f)(1)(i) of this clause.

(2) Subsequent payment or interest charge. As soon as practicable, but not later than 7 days after receipt of satisfactory written notification that the identified subcontract performance deficiency has been corrected, the Contractor shall--

(i) Pay the amount withheld under subdivision (f)(1)(ii) of this clause to such first-tier subcontractor; or

(ii) Incur an obligation to pay a late payment interest penalty to such first-tier subcontractor computed at the rate of interest established by the Secretary of the Treasury, and published in the Federal Register, for interest payments under section 12 of the Contracts Disputes Act of 1978 (41 U.S.C. 611) in effect at the time the Contractor accrues the obligation to pay an interest penalty.

(g) Written notice of subcontractor withholding. A written notice of any withholding shall be issued to a subcontractor (with a copy to the Contracting Officer of any such notice issued by the Contractor), specifying--

(1) The amount to be withheld;

(2) The specific causes for the withholding under the terms of the subcontract; and

(3) The remedial actions to be taken by the subcontractor in order to receive payment of the amounts withheld.

(h) Subcontractor payment entitlement. The Contractor may not request payment from the Government of any amount withheld or retained in accordance with paragraph (d) of this clause until such time as the Contractor has determined and certified to the Contracting Officer that the subcontractor is entitled to the payment of such amount.

(i) Prime-subcontractor disputes. A dispute between the Contractor and subcontractor relating to the amount or entitlement of a subcontractor to a payment or a late payment interest penalty under a clause included in the subcontract pursuant to paragraph (c) of this clause does not constitute a dispute to which the United States is a party. The United States may not be interpleaded in any judicial or administrative proceeding involving such a dispute.

(j) Preservation of prime-subcontractor rights. Except as provided in paragraph (i) of this clause, this clause shall not limit or impair any contractual, administrative, or judicial remedies otherwise available to the Contractor or a subcontractor in the event of a dispute involving late payment or nonpayment by the Contractor or deficient subcontract performance or nonperformance by a subcontractor.

(k) Non-recourse for prime contractor interest penalty. The Contractor's obligation to pay an interest penalty to a subcontractor pursuant to the clauses included in a subcontract under paragraph (c) of this clause shall not be construed to be an obligation of the United States for such interest penalty. A cost-reimbursement claim may not include any amount for reimbursement of such interest penalty.

52.232-33 PAYMENT BY ELECTRONIC FUNDS TRANSFER—CENTRAL CONTRACTOR REGISTRATION (MAY 1999)

(a) Method of payment. (1) All payments by the Government under this contract shall be made by electronic funds transfer (EFT), except as provided in paragraph (a)(2) of this clause. As used in this clause, the term ``EFT'' refers to the funds transfer and may also include the payment information transfer.

(2) In the event the Government is unable to release one or more payments by EFT, the Contractor agrees to either--

(i) Accept payment by check or some other mutually agreeable method of payment; or

(ii) Request the Government to extend the payment due date until such time as the Government can make payment by EFT (but see paragraph (d) of this clause).

(b) Contractor's EFT information. The Government shall make payment to the Contractor using the EFT information contained in the Central Contractor Registration (CCR) database. In the event that the EFT information changes, the Contractor shall be responsible for providing the updated information to the CCR database.

(c) Mechanisms for EFT payment. The Government may make payment by EFT through either the Automated Clearing House (ACH) network, subject to the rules of the National Automated Clearing House Association, or the Fedwire Transfer System. The rules governing Federal payments through the ACH are contained in 31 CFR part 210.

(d) Suspension of payment. If the Contractor's EFT information in the CCR database is incorrect, then the Government need not make payment to the Contractor under this contract until correct EFT information is entered into the CCR database; and any invoice or contract financing request shall be deemed not to be a proper invoice for the purpose of prompt payment under this contract. The prompt payment terms of the contract regarding notice of an improper invoice and delays in accrual of interest penalties apply.

(e) Contractor EFT arrangements. If the Contractor has identified multiple payment receiving points (i.e., more than one remittance address and/or EFT information set) in the CCR database, and the Contractor has not notified the Government of the payment receiving point applicable to this contract, the Government shall make payment to the first payment receiving point (EFT information set or remittance address as applicable) listed in the CCR database.

(f) Liability for uncompleted or erroneous transfers. (1) If an uncompleted or erroneous transfer occurs because the Government used the Contractor's EFT information incorrectly, the Government remains responsible for--

(i) Making a correct payment;

(ii) Paying any prompt payment penalty due; and

(iii) Recovering any erroneously directed funds.

(2) If an uncompleted or erroneous transfer occurs because the Contractor's EFT information was incorrect, or was revised within 30 days of Government release of the EFT payment transaction instruction to the Federal Reserve System, and--

(i) If the funds are no longer under the control of the payment office, the Government is deemed to have made payment and the Contractor is responsible for recovery of any erroneously directed funds; or

(ii) If the funds remain under the control of the payment office, the Government shall not make payment, and the provisions of paragraph (d) of this clause shall apply.

(g) EFT and prompt payment. A payment shall be deemed to have been made in a timely manner in accordance with the prompt payment terms of this contract if, in the EFT payment transaction instruction released to the Federal Reserve System, the date specified for settlement of the payment is on or before the prompt payment due date, provided the specified payment date is a valid date under the rules of the Federal Reserve System.

(h) EFT and assignment of claims. If the Contractor assigns the proceeds of this contract as provided for in the assignment of claims terms of this contract, the Contractor shall require as a condition of any such assignment, that the assignee shall register in the CCR database and shall be paid by EFT in accordance with the terms of this clause. In all respects, the requirements of this clause shall apply to the assignee as if it were the Contractor. EFT information that shows the ultimate recipient of the transfer to be other than the Contractor, in the absence of a proper assignment of claims acceptable to the Government, is incorrect EFT information within the meaning of paragraph (d) of this clause.

(i) Liability for change of EFT information by financial agent. The Government is not liable for errors resulting from changes to EFT information made by the Contractor's financial agent.

(j) Payment information. The payment or disbursing office shall forward to the Contractor available payment information that is suitable for transmission as of the date of release of the EFT instruction to the Federal Reserve System. The Government may request the Contractor to designate a desired format and method(s) for delivery of payment information from a list of formats and methods the payment office is capable of executing. However, the Government does not guarantee that any particular format or method of delivery is available at any particular payment office and retains the latitude to use the format and delivery method most convenient to the Government. If the Government makes payment by check in accordance with paragraph (a) of this clause, the Government shall mail the payment information to the remittance address contained in the CCR database.

(End of Clause)

52.233-1 DISPUTES. (DEC 1998)

(a) This contract is subject to the Contract Disputes Act of 1978, as amended (41 U.S.C. 601-613).

(b) Except as provided in the Act, all disputes arising under or relating to this contract shall be resolved under this clause.

(c) "Claim," as used in this clause, means a written demand or written assertion by one of the contracting parties seeking, as a matter of right, the payment of money in a sum certain, the adjustment or interpretation of contract terms, or other relief arising under or relating to this contract. A claim arising under a contract, unlike a claim relating to that contract, is a claim that can be resolved under a contract clause that provides for the relief sought by the claimant. However, a written demand or written assertion by the Contractor seeking the payment of money exceeding $100,000 is not a claim under the Act until certified as required by subparagraph (d)(2) of this clause. A voucher, invoice, or other routine request for payment that is not in dispute when submitted is not a claim under the Act. The submission may be converted to a claim under the Act, by complying with the submission and certification requirements of this clause, if it is disputed either as to liability or amount or is not acted upon in a reasonable time.

(d)(1) A claim by the Contractor shall be made in writing and, unless otherwise stated in this contract, submitted within 6 years after accrual of the claim to the Contracting Officer for a written decision. A claim by the Government against the Contractor shall be subject to a written decision by the Contracting Officer.

(2)(i) The contractors shall provide the certification specified in subparagraph (d)(2)(iii) of this clause when submitting any claim -

(A) Exceeding $100,000; or

(B) Regardless of the amount claimed, when using -

(1) Arbitration conducted pursuant to 5 U.S.C. 575-580; or

(2) Any other alternative means of dispute resolution (ADR) technique that the agency elects to handle in accordance with the Administrative Dispute Resolution Act (ADRA).

(ii) The certification requirement does not apply to issues in controversy that have not been submitted as all or part of a claim.

(iii) The certification shall state as follows: "I certify that the claim is made in good faith; that the supporting data are accurate and complete to the best of my knowledge and belief; that the amount requested accurately reflects the contract adjustment for which the Contractor believes the Government is liable; and that I am duly authorized to certify the claim on behalf of the Contractor.

(3) The certification may be executed by any person duly authorized to bind the Contractor with respect to the claim.

(e) For Contractor claims of $100,000 or less, the Contracting Officer must, if requested in writing by the Contractor, render a decision within 60 days of the request. For Contractor-certified claims over $100,000, the Contracting Officer must, within 60 days, decide the claim or notify the Contractor of the date by which the decision will be made.

(f) The Contracting Officer's decision shall be final unless the Contractor appeals or files a suit as provided in the Act.

(g) If the claim by the Contractor is submitted to the Contracting Officer or a claim by the Government is presented to the Contractor, the parties, by mutual consent, may agree to use alternative disput resolution (ADR). If the Contractor refuses an offer for ADR, the Contractor shall inform the Contracting Officer, in writing, of the Contractor's specific reasons for rejecting the request.

(h) The Government shall pay interest on the amount found due and unpaid from (1) the date the Contracting Officer receives the claim (certified, if required); or (2) the date that payment otherwise would be due, if that date is later, until the date of payment. With regard to claims having defective certifications, as defined in (FAR) 48 CFR 33.201, interest shall be paid from the date that the Contracting Officer initially receives the claim. Simple interest on claims shall be paid at the rate, fixed by the Secretary of the Treasury as provided in the Act, which is applicable to the period during which the Contracting Officer receives the claim and then at the rate applicable for each 6-month period as fixed by the Treasury Secretary during the pendency of the claim.

(i) The Contractor shall proceed diligently with performance of this contract, pending final resolution of any request for relief, claim, appeal, or action arising under the contract, and comply with any decision of the Contracting Officer.

(End of clause)

52.233-3 PROTEST AFTER AWARD (AUG. 1996)

(a) Upon receipt of a notice of protest (as defined in FAR 33.101) or a determination that a protest is likely (see FAR 33.102(d)), the Contracting Officer may, by written order to the Contractor, direct the Contractor to stop performance of the work called for by this contract. The order shall be specifically identified as a stop-work order issued under this clause. Upon receipt of the order, the Contractor shall immediately comply with its terms and take all reasonable steps to minimize the incurrence of costs allocable to the work covered by the order during the period of work stoppage. Upon receipt of the final decision in the protest, the Contracting Officer shall either--

(1) Cancel the stop-work order; or

(2) Terminate the work covered by the order as provided in the Default, or the Termination for Convenience of the Government, clause of this contract.

(b) If a stop-work order issued under this clause is canceled either before or after a final decision in the protest, the Contractor shall resume work. The Contracting Officer shall make an equitable adjustment in the delivery schedule or contract price, or both, and the contract shall be modified, in writing, accordingly, if--

(1) The stop-work order results in an increase in the time required for, or in the Contractor's cost properly allocable to, the performance of any part of this contract; and

(2) The Contractor asserts its right to an adjustment within 30 days after the end of the period of work stoppage; provided, that if the Contracting Officer decides the facts justify the action, the Contracting Officer may receive and act upon a proposal at any time before final payment under this contract.

(c) If a stop-work order is not canceled and the work covered by the order is terminated for the convenience of the Government, the Contracting Officer shall allow reasonable costs resulting from the stop-work order in arriving at the termination settlement.

(d) If a stop-work order is not canceled and the work covered by the order is terminated for default, the Contracting Officer shall allow, by equitable adjustment or otherwise, reasonable costs resulting from the stop-work order.

(e) The Government's rights to terminate this contract at any time are not affected by action taken under this clause.

(f) If, as the result of the Contractor's intentional or negligent misstatement, misrepresentation, or miscertification, a protest related to this contract is sustained, and the Government pays costs, as provided

in FAR 33.102(b)(2) or 33.104(h)(1), the Government may require the Contractor to reimburse the Government the amount of such costs. In addition to any other remedy available, and pursuant to the requirements of Subpart 32.6, the Government may collect this debt by offsetting the amount against any payment due the Contractor under any contract between the Contractor and the Government.

52.236-2 C DIFFERING SITE CONDITIONS (APR 1984)

As prescribed in 36.502, insert the following clause in solicitations and contracts when a fixed-price construction contract or a fixed-price dismantling, demolition, or removal of improvements contract is contemplated and the contract amount is expected to exceed the small purchase limitation. The Contracting Officer may insert the clause in solicitations and contracts when a fixed-price construction or a fixed-price contract for dismantling, demolition, or removal of improvements is contemplated and the contract amount is expected to be within the small purchase limitation.

(a) The Contractor shall promptly, and before the conditions are disturbed, give a written notice to the Contracting Officer of

(1) subsurface or latent physical conditions at the site which differ materially from those indicated in this contract, or

(2) unknown physical conditions at the site, of an unusual nature, which differ materially from those ordinarily encountered and generally recognized as inhering in work of the character provided for in the contract.

(b) The Contracting Officer shall investigate the site conditions promptly after receiving the notice. If the conditions do materially so differ and cause an increase or decrease in the Contractor's cost of, or the time required for, performing any part of the work under this contract, whether or not changed as a result of the conditions, an equitable adjustment shall be made under this clause and the contract modified in writing accordingly.

(c) No request by the Contractor for an equitable adjustment to the contract under this clause shall be allowed, unless the Contractor has given the written notice required; provided, that the time prescribed in (a) above for giving written notice may be extended by the Contracting Officer.

(d) No request by the Contractor for an equitable adjustment to the contract for differing site conditions shall be allowed if made after final payment under this contract.

52.236-3 C SITE INVESTIGATION AND CONDITIONS AFFECTING THE WORK (APR 1984)

(a) The Contractor acknowledges that it has taken steps reasonably necessary to ascertain the nature and location of the work, and that it has investigated and satisfied itself as to the general and local conditions which can affect the work or its cost, including but not limited to

(1) conditions bearing upon transportation, disposal, handling, and storage of materials;

(2) the availability of labor, water, electric power, and roads;

(3) uncertainties of weather, river stages, tides, or similar physical conditions at the site;

(4) the conformation and conditions of the ground; and (5) the character of equipment and facilities needed preliminary to and during work performance. The Contractor also acknowledges that it has satisfied itself as to the character, quality, and quantity of surface and subsurface materials or obstacles to be encountered insofar as this information is reasonably ascertainable from an inspection of the site, including all

exploratory work done by the Government, as well as from the drawings and specifications made a part of this contract. Any failure of the Contractor to take the actions described and acknowledged in this paragraph will not relieve the Contractor from responsibility for estimating properly the difficulty and cost of successfully performing the work, or for proceeding to successfully perform the work without additional expense to the Government.

(b) The Government assumes no responsibility for any conclusions or interpretations made by the Contractor based on the information made available by the Government. Nor does the Government assume responsibility for any understanding reached or representation made concerning conditions which can affect the work by any of its officers or agents before the execution of this contract, unless that understanding or representation is expressly stated in this contract.

52.236-5 C MATERIAL AND WORKMANSHIP (APR 1984)

(a) All equipment, material, and articles incorporated into the work covered by this contract shall be new and of the most suitable grade for the purpose intended, unless otherwise specifically provided in this contract. References in the specifications to equipment, material, articles, or patented processes by trade name, make, or catalog number, shall be regarded as establishing a standard of quality and shall not be construed as limiting competition. The Contractor may, at its option, use any equipment, material, article, or process that, in the judgment of the Contracting Officer, is equal to that named in the specifications, unless otherwise specifically provided in this contract.

(b) The Contractor shall obtain the Contracting Officer's approval of the machinery and mechanical and other equipment to be incorporated into the work. When requesting approval, the Contractor shall furnish to the Contracting Officer the name of the manufacturer, the model number, and other information concerning the performance, capacity, nature, and rating of the machinery and mechanical and other equipment. When required by this contract or by the Contracting Officer, the Contractor shall also obtain the Contracting Officer's approval of the material or articles which the Contractor contemplates incorporating into the work. When requesting approval, the Contractor shall provide full information concerning the material or articles. When directed to do so, the Contractor shall submit samples for approval at the Contractor's expense, with all shipping charges prepaid. Machinery, equipment, material, and articles that do not have the required approval shall be installed or used at the risk of subsequent rejection.

(c) All work under this contract shall be performed in a skillful and workmanlike manner. The Contracting Officer may require, in writing, that the Contractor remove from the work any employee the Contracting Officer deems incompetent, careless, or otherwise objectionable.

52.236-6 C SUPERINTENDENCE BY THE CONTRACTOR (APR 1984)

At all times during performance of this contract and until the work is completed and accepted, the Contractor shall directly superintend the work or assign and have on the worksite a competent superintendent who is satisfactory to the Contracting Officer and has authority to act for the Contractor.

52.236-7 C PERMITS AND RESPONSIBILITIES (NOV 1991)

The Contractor shall, without additional expense to the Government, be responsible for obtaining any necessary licenses and permits, and for complying with any Federal, State, and municipal laws, codes, and regulations applicable to the performance of the work. The Contractor shall also be responsible for all damages to persons or property that occur as a result of the Contractor's fault or negligence. The Contractor shall also be responsible for all materials delivered and work performed until completion and acceptance of the entire work, except for any completed unit of work which may have been accepted under the contract.

52.236-8 C OTHER CONTRACTS (APR 1984)

The Government may undertake or award other contracts for additional work at or near the site of the work under this contract. The Contractor shall fully cooperate with the other contractors and with Government employees and shall carefully adapt scheduling and performing the work under this contract to accommodate the additional work, heeding any direction that may be provided by the Contracting Officer. The Contractor shall not commit or permit any act that will interfere with the performance of work by any other contractor or by Government employees.

52.236-9 C PROTECTION OF EXISTING VEGETATION, STRUCTURES, EQUIPMENT, UTILITIES, AND IMPROVEMENTS (APR 1984)

(a) The Contractor shall preserve and protect all structures, equipment, and vegetation (such as trees, shrubs, and grass) on or adjacent to the work site, which are not to be removed and which do not unreasonably interfere with the work required under this contract. The Contractor shall only remove trees when specifically authorized to do so, and shall avoid damaging vegetation that will remain in place. If any limbs or branches of trees are broken during contract performance, or by the careless operation of equipment, or by workmen, the Contractor shall trim those limbs or branches with a clean cut and paint the cut with a tree-pruning compound as directed by the Contracting Officer.

(b) The Contractor shall protect from damage all existing improvements and utilities

(1) at or near the work site, and

(2) on adjacent property of a third party, the locations of which are made known to or should be known by the Contractor. The Contractor shall repair any damage to those facilities, including those that are the property of a third party, resulting from failure to comply with the requirements of this contract or failure to exercise reasonable care in performing the work. If the Contractor fails or refuses to repair the damage promptly, the Contracting Officer may have the necessary work performed and charge the cost to the Contractor.

52.236-10 C OPERATIONS AND STORAGE AREAS (APR 1984)

(a) The Contractor shall confine all operations (including storage of materials) on Government premises to areas authorized or approved by the Contracting Officer. The Contractor shall hold and save the Government, its officers and agents, free and harmless from liability of any nature occasioned by the Contractor's performance.

(b) Temporary buildings (e.g., storage sheds, shops, offices) and utilities may be erected by the Contractor only with the approval of the Contracting Officer and shall be built with labor and materials furnished by the Contractor without expense to the Government. The temporary buildings and utilities shall remain the property of the Contractor and shall be removed by the Contractor at its expense upon completion of the work. With the written consent of the Contracting Officer, the buildings and utilities may be abandoned and need not be removed.

(c) The Contractor shall, under regulations prescribed by the Contracting Officer, use only established roadways, or use temporary roadways constructed by the Contractor when and as authorized by the Contracting Officer. When materials are transported in prosecuting the work, vehicles shall not be loaded beyond the loading capacity recommended by the manufacturer of the vehicle or prescribed by any Federal, State, or local law or regulation. When it is necessary to cross curbs or sidewalks, the Contractor shall protect them from damage. The Contractor shall repair or pay for the repair of any damaged curbs, sidewalks, or roads.

52.236-11 C USE AND POSSESSION PRIOR TO COMPLETION (APR 1984)

(a) The Government shall have the right to take possession of or use any completed or partially completed part of the work. Before taking possession of or using any work, the Contracting Officer shall furnish the Contractor a list of items of work remaining to be performed or corrected on those portions of the work that the Government intends to take possession of or use. However, failure of the Contracting Officer to list any item of work shall not relieve the Contractor of responsibility for complying with the terms of the contract. The Government's possession or use shall not be deemed an acceptance of any work under the contract.

(b) While the Government has such possession or use, the Contractor shall be relieved of the responsibility for the loss of or damage to the work resulting from the Government's possession or use, notwithstanding the terms of the clause in this contract entitled "Permits and Responsibilities." If prior possession or use by the Government delays the progress of the work or causes additional expense to the Contractor, an equitable adjustment shall be made in the contract price or the time of completion, and the contract shall be modified in writing accordingly.

52.236-12 C CLEANING UP (APR 1984)

The Contractor shall at all times keep the work area, including storage areas, free from accumulations of waste materials. Before completing the work, the Contractor shall remove from the work and premises any rubbish, tools, scaffolding, equipment, and materials that are not the property of the Government. Upon completing the work, the Contractor shall leave the work area in a clean, neat, and orderly condition satisfactory to the Contracting Officer.

52.236-13 C ACCIDENT PREVENTION (NOV 1991) – ALTERNATE I (NOV 1991)

(a) The Contractor shall provide and maintain work environments and procedures which will

(1) safeguard the public and Government personnel, property, materials, supplies, and equipment exposed to Contractor operations and activities;

(2) avoid interruptions of Government operations and delays in project completion dates; and

(3) control costs in the performance of this contract.

(b) For these purposes on contracts for construction or dismantling, demolition, or removal of improvements, the Contractor shall-

(1) Provide appropriate safety barricades, signs, and signal lights;

(2) Comply with the standards issued by the Secretary of Labor at 29 CFR Part 1926 and 29 CFR Part 1910; and

(3) Ensure that any additional measures the Contracting Officer determines to be reasonably necessary for the purposes are taken.

(c) If this contract is for construction or dismantling, demolition or removal of improvements with any Department of Defense agency or component, the Contractor shall comply with all pertinent provisions of the latest version of U.S. Army Corps of Engineers Safety and Health Requirements Manual, EM 385-1-1, in effect on the date of the solicitation.

(d) Whenever the Contracting Officer becomes aware of any noncompliance with these requirements or

any condition which poses a serious or imminent danger to the health or safety of the public or Government personnel, the Contracting Officer shall notify the Contractor orally, with written confirmation, and request immediate initiation of corrective action. This notice, when delivered to the Contractor or the Contractor's representative at the work site, shall be deemed sufficient notice of the noncompliance and that corrective action is required. After receiving the notice, the Contractor shall immediately take corrective action. If the Contractor fails or refuses to promptly take corrective action, the Contracting Officer may issue an order stopping all or part of the work until satisfactory corrective action has been taken. The Contractor shall not be entitled to any equitable adjustment of the contract price or extension of the performance schedule on any stop work order issued under this clause.

(e) The Contractor shall insert this clause, including this paragraph (e), with appropriate changes in the designation of the parties, in subcontracts.

(f) Before commencing the work, the Contractor shall-

(1) Submit a written proposed plan for implementing this clause. The plan shall include an analysis of the significant hazards to life, limb, and property inherent in contract work performance and a plan for controlling these hazards; and

(2) Meet with representatives of the Contracting Officer to discuss and develop a mutual understanding relative to administration of the overall safety program.

52.236-15 C SCHEDULES FOR CONSTRUCTION CONTRACTS (APR 1984)

(a) The Contractor shall, within five days after the work commences on the contract or another period of time determined by the Contracting Officer, prepare and submit to the Contracting Officer for approval three copies of a practicable schedule showing the order in which the Contractor proposes to perform the work, and the dates on which the Contractor contemplates starting and completing the several salient features of the work (including acquiring materials, plant, and equipment). The schedule shall be in the form of a progress chart of suitable scale to indicate appropriately the percentage of work scheduled for completion by any given date during the period. If the Contractor fails to submit a schedule within the time prescribed, the Contracting Officer may withhold approval of progress payments until the Contractor submits the required schedule.

(b) The Contractor shall enter the actual progress on the chart as directed by the Contracting Officer, and upon doing so shall immediately deliver three copies of the annotated schedule to the Contracting Officer. If, in the opinion of the Contracting Officer, the Contractor falls behind the approved schedule, the Contractor shall take steps necessary to improve its progress, including those that may be required by the Contracting Officer, without additional cost to the Government. In this circumstance, the Contracting Officer may require the Contractor to increase the number of shifts, overtime operations, days of work, and/or the amount of construction plant, and to submit for approval any supplementary schedule or schedules in chart form as the Contracting Officer deems necessary to demonstrate how the approved rate of progress will be regained.

(c) Failure of the Contractor to comply with the requirements of the Contracting Officer under this clause shall be grounds for a determination by the Contracting Officer that the Contractor is not prosecuting the work with sufficient diligence to ensure completion within the time specified in the contract. Upon making this determination, the Contracting Officer may terminate the Contractor's right to proceed with the work, or any separable part of it, in accordance with the default terms of this contract.

52.236-21 C SPECIFICATIONS AND DRAWINGS FOR CONSTRUCTION (FEB 1997)

(a) The Contractor shall keep on the work site a copy of the drawings and specifications and shall at all times give the Contracting Officer access thereto. Anything mentioned in the specifications and not shown

on the drawings, or shown on the drawings and not mentioned in the specifications, shall be of like effect as if shown or mentioned in both. In case of difference between drawings and specifications, the specifications shall govern. In case of discrepancy in the figures, in the drawings, or in the specifications, the matter shall be promptly submitted to the Contracting Officer, who shall promptly make a determination in writing. Any adjustment by the Contractor without such a determination shall be at its own risk and expense. The Contracting Officer shall furnish from time to time such detailed drawings and other information as considered necessary, unless otherwise provided.

(b) Wherever in the specifications or upon the drawings the words "directed", "required", "ordered", "designated", "prescribed", or words of like import are used, it shall be understood that the "direction", "requirement", "order", "designation", or "prescription", of the Contracting Officer is intended and similarly the words "approved", "acceptable", "satisfactory", or words of like import shall mean "approved by," or "acceptable to", or "satisfactory to" the Contracting Officer, unless otherwise expressly stated.

(c) Where "as shown," as indicated", "as detailed", or words of similar import are used, it shall be understood that the reference is made to the drawings accompanying this contract unless stated otherwise. The word "provided" as used herein shall be understood to mean "provide complete in place," that is "furnished and installed".

(d) Shop drawings means drawings, submitted to the Government by the Contractor, subcontractor, or any lower tier subcontractor pursuant to a construction contract, showing in detail (1) the proposed fabrication and assembly of structural elements, and (2) the installation (i.e., fit, and attachment details) of materials or equipment. It includes drawings, diagrams, layouts, schematics, descriptive literature, illustrations, schedules, performance and test data, and similar materials furnished by the contractor to explain in detail specific portions of the work required by the contract. The Government may duplicate, use, and disclose in any manner and for any purpose shop drawings delivered under this contract.

(e) If this contract requires shop drawings, the Contractor shall coordinate all such drawings, and review them for accuracy, completeness, and compliance with contract requirements and shall indicate its approval thereon as evidence of such coordination and review. Shop drawings submitted to the Contracting Officer without evidence of the Contractor's approval may be returned for resubmission. The Contracting Officer will indicate an approval or disapproval of the shop drawings and if not approved as submitted shall indicate the Government's reasons therefor. Any work done before such approval shall be at the Contractor's risk. Approval by the Contracting Officer shall not relieve the Contractor from responsibility for any errors or omissions in such drawings, nor from responsibility for complying with the requirements of this contract, except with respect to variations described and approved in accordance with (f) below.

(f) If shop drawings show variations from the contract requirements, the Contractor shall describe such variations in writing, separate from the drawings, at the time of submission. If the Contracting Officer approves any such variation, the Contracting Officer shall issue an appropriate contract modification, except that, if the variation is minor or does not involve a change in price or in time of performance, a modification need not be issued.

(g) The Contractor shall submit to the Contracting Officer for approval four copies (unless otherwise indicated) of all shop drawings as called for under the various headings of these specifications. Three sets (unless otherwise indicated) of all shop drawings, will be retained by the Contracting Officer and one set will be returned to the Contractor.

52.236-26 C PRECONSTRUCTION CONFERENCE (FEB 1995)

If the Contracting Officer decides to conduct a preconstruction conference, the successful offeror will be notified and will be required to attend. The Contracting Officer's notification will include specific details regarding the date, time, and location of the conference, any need for attendance by subcontractors, and information regarding the items to be discussed.

52.237-2 PROTECTION OF GOVERNMENT BUILDINGS, EQUIPMENT, AND VEGETATION (APR 1984)

The Contractor shall use reasonable care to avoid damaging existing buildings, equipment, and vegetation on the Government installation. If the Contractor's failure to use reasonable care causes damage to any of this property, the Contractor shall replace or repair the damage at no expense to the Government as the Contracting Officer directs. If the Contractor fails or refuses to make such repair or replacement, the Contractor shall be liable for the cost, which may be deducted from the contract price.

52.242-1 TM NOTICE OF INTENT TO DISALLOW COSTS (APR 1984)

(a) Notwithstanding any other clause of this contract--

(1) The Contracting Officer may at any time issue to the Contractor a written notice of intent to disallow specified costs incurred or planned for incurrence under this contract that have been determined not to be allowable under the contract terms; and

(2) The Contractor may, after receiving a notice under subparagraph (1) above, submit a written response to the Contracting Officer, with justification for allowance of the costs. If the Contractor does respond within 60 days, the Contracting Officer shall, within 60 days of receiving the response, either make a written withdrawal of the notice or issue a written decision.

(b) Failure to issue a notice under this Notice of Intent to Disallow Costs clause shall not affect the Government's rights to take exception to incurred costs.

52.242-3 TM PENALTIES FOR UNALLOWABLE COSTS. (OCT 1995)

(a) Definition. Proposal, as used in this clause, means either--

(1) A final indirect cost rate proposal submitted by the Contractor after the expiration of its fiscal year which--

(i) Relates to any payment made on the basis of billing rates; or

(ii) Will be used in negotiating the final contract price; or

(2) The final statement of costs incurred and estimated to be incurred under the Incentive Price Revision clause (if applicable), which is used to establish the final contract price.

(b) Contractors which include unallowable indirect costs in a proposal may be subject to penalties. The penalties are prescribed in 10 U.S.C. 2324 or 41 U.S.C. 256, as applicable, which is implemented in Section 42.709 of the Federal Acquisition Regulation (FAR).

(c) The Contractor shall not include in any proposal any cost which is unallowable, as defined in Part 31 of the FAR, or an executive agency supplement to Part 31 of the FAR.

(d) If the Contracting Officer determines that a cost submitted by the Contractor in its proposal is expressly unallowable under a cost principle in the FAR, or an executive agency supplement to the FAR, that defines the allowability of specific selected costs, the Contractor shall be assessed a penalty equal to--

(1) The amount of the disallowed cost allocated to this contract; plus

2) Simple interest, to be computed--

(i) On the amount the Contractor was paid (whether as a progress or billing payment) in excess of the amount to which the Contractor was entitled; and

(ii) Using the applicable rate effective for each six-month interval prescribed by the Secretary of the Treasury pursuant to Pub. L. 92-41 (85 Stat. 97).

(e) If the Contracting Officer determines that a cost submitted by the Contractor in its proposal includes a cost previously determined to be unallowable for that Contractor, then the Contractor will be assessed a penalty in an amount equal to two times the amount of the disallowed cost allocated to this contract.

(f) Determinations under paragraphs (d) and (e) of this clause are final decisions within the meaning of the Contract Disputes Act of 1978 (41 U.S.C. 601, et seq.).

(g) Pursuant to the criteria in FAR 42.709-5, the Contracting Officer may waive the penalties in paragraph (d) or (e) of this clause.

(h) Payment by the Contractor of any penalty assessed under this clause does not constitute repayment to the Government of any unallowable cost which has been paid by the Government to the Contractor.

52.242-4 TM CERTIFICATION OF FINAL INDIRECT COSTS (JAN 1997)

(a) The Contractor shall--

(1) Certify any proposal to establish or modify final indirect cost rates;

(2) Use the format in paragraph (c) of this clause to certify; and

(3) Have the certificate signed by an individual of the Contractor's organization at a level no lower than a vice president or chief financial officer of the business segment of the Contractor that submits the proposal.

(b)) Failure by the Contractor to submit a signed certificate, as described in this clause, may result in final indirect costs at rates unilaterally established by the Contracting Officer.

(c) The certificate of final indirect costs shall read as follows:

CERTIFICATE OF FINAL INDIRECT COSTS

This is to certify that I have reviewed this proposal to establish final indirect cost rates and to the best of my knowledge and belief: 1. All costs included in this proposal (identify proposal and date) to establish final indirect cost rates for (identify period covered by rate) are allowable in accordance with the cost principles of the Federal Acquisition Regulation (FAR) and its supplements applicable to the contracts to which the final indirect cost rates will apply; and 2. This proposal does not include any costs which are expressly unallowable under applicable cost principles of the FAR or its supplements.

Firm:----------

Signature:----------

Name of Certifying Official:----------

Title:----------

Date of Execution:----------

52.242-13 BANKRUPTCY. (JUL 1995)

In the event the Contractor enters into proceedings relating to bankruptcy, whether voluntary or involuntary, the Contractor agrees to furnish, by certified mail or electronic commerce method authorized by the contract, written notification of the bankruptcy to the Contracting Officer responsible for administering the contract. This notification shall be furnished within five days of the initiation of the proceedings relating to bankruptcy filing. This notification shall include the date on which the bankruptcy petition was filed, the identity of the court in which the bankruptcy petition was filed, and a listing of Government contract numbers and contracting offices for all Government contracts against which final payment has not been made. This obligation remains in effect until final payment under this contract.

52.242-14 C SUSPENSION OF WORK (APR 1984)

(a) The Contracting Officer may order the Contractor, in writing, to suspend, delay, or interrupt all or any part of the work of this contract for the period of time that the Contracting Officer determines appropriate for the convenience of the Government.

(b) If the performance of all or any part of the work is, for an unreasonable period of time, suspended, delayed, or interrupted (1) by an act of the Contracting Officer in the administration of this contract, or (2) by the Contracting Officer's failure to act within the time specified in this contract (or within a reasonable time if not specified), an adjustment shall be made for any increase in the cost of performance of this contract (excluding profit) necessarily caused by the unreasonable suspension, delay, or interruption, and the contract modified in writing accordingly. However, no adjustment shall be made under this clause for any suspension, delay, or interruption to the extent that performance would have been so suspended, delayed, or interrupted by any other cause, including the fault or negligence of the Contractor, or for which an equitable adjustment is provided for or excluded under any other term or condition of this contract. (c) A claim under this clause shall not be allowed (1) for any costs incurred more than 20 days before the Contractor shall have notified the Contracting Officer in writing of the act or failure to act involved (but this requirement shall not apply as to a claim resulting from a suspension order), and (2) unless the claim, in an amount stated, is asserted in writing as soon as practicable after the termination of the suspension, delay, or interruption, but not later than the date of final payment under the contract.

52.243-1 SVC CHANGES--FIXED-PRICE (AUG 1987) - ALTERNATE I (APR 1984)

(a) The Contracting Officer may at any time, by written order, and without notice to the sureties, if any, make changes within the general scope of this contract in any one or more of the following:

(1) Description of services to be performed.

(2) Time of performance (i.e., hours of the day, days of the week, etc.).

(3) Place of performance of the services.

(b) If any such change causes an increase or decrease in the cost of, or the time required for, performance of any part of the work under this contract, whether or not changed by the order, the Contracting Officer shall make an equitable adjustment in the contract price, the delivery schedule, or both, and shall modify the contract.

(c) The Contractor must assert its right to an adjustment under this clause within 30 days from the date of receipt of the written order. However, if the Contracting Officer decides that the facts justify it, the Contracting Officer may receive and act upon a proposal submitted before final payment of the contract.

(d) If the Contractor's proposal includes the cost of property made obsolete or excess by the change, the Contracting Officer shall have the right to prescribe the manner of the disposition of the property.

(e) Failure to agree to any adjustment shall be a dispute under the Disputes clause. However, nothing in this clause shall excuse the Contractor from proceeding with the contract as changed.

52.243-3 TM CHANGES--TIME-AND-MATERIALS OR LABOR-HOURS (AUG 1987)

(a) The Contracting Officer may at any time, by written order, and without notice to the sureties, if any, make changes within the general scope of this contract in any one or more of the following:

(1) Drawings, designs, or specifications.

(2) Method of shipment or packing.

(3) Place of delivery.

(4) Amount of Government-furnished property.

(b) If any change causes an increase or decrease in any hourly rate, the ceiling price, or the time required for performance of any part of the work under this contract, whether or not changed by the order, or otherwise affects any other terms and conditions of this contract, the Contracting Officer shall make an equitable adjustment in the (1) ceiling price, (2) hourly rates, (3) delivery schedule, and (4) other affected terms, and shall modify the contract accordingly.

(c) The Contractor must assert its right to an adjustment under this clause within 30 days from the date of receipt of the written order. However, if the Contracting Officer decides that the facts justify it, the Contracting Officer may receive and act upon a proposal submitted before final payment of the contract.

(d) Failure to agree to any adjustment shall be a dispute under the Disputes clause. However, nothing in this clause shall excuse the Contractor from proceeding with the contract as changed.

52.243-4 C CHANGES (AUG 1987)

(a) The Contracting Officer may, at any time, without notice to the sureties, if any, by written order designated or indicated to be a change order, make changes in the work within the general scope of the contract, including changes--

(1) In the specifications (including drawings and designs);

(2) In the method or manner of performance of the work;

(3) In the Government-furnished facilities, equipment, materials, services, or site; or

(4) Directing acceleration in the performance of the work.

(b) Any other written or oral order (which, as used in this paragraph (b), includes direction, instruction, interpretation, or determination) from the Contracting Officer that causes a change shall be treated as a change order under this clause; provided, that the Contractor gives the Contracting Officer written notice stating

(1) the date, circumstances, and source of the order and

(2) that the Contractor regards the order as a change order.

(c) Except as provided in this clause, no order, statement, or conduct of the Contracting Officer shall be treated as a change under this clause or entitle the Contractor to an equitable adjustment.

(d) If any change under this clause causes an increase or decrease in the Contractor's cost of, or the time required for, the performance of any part of the work under this contract, whether or not changed by any such order, the Contracting Officer shall make an equitable adjustment and modify the contract in writing. However, except for an adjustment based on defective specifications, no adjustment for any change under paragraph (b) of this clause shall be made for any costs incurred more than 20 days before the Contractor gives written notice as required. In the case of defective specifications for which the Government is responsible, the equitable adjustment shall include any increased cost reasonably incurred by the Contractor in attempting to comply with the defective specifications.

(e) The Contractor must assert its right to an adjustment under this clause within 30 days after

(1) receipt of a written change order under paragraph (a) of this clause or (2) the furnishing of a written notice under paragraph (b) of this clause, by submitting to the Contracting Officer a written statement describing the general nature and amount of the proposal, unless this period is extended by the Government. The statement of proposal for adjustment may be included in the notice under paragraph (b) above.

(f) No proposal by the Contractor for an equitable adjustment shall be allowed if asserted after final payment under this contract.

52.244-2 TM SUBCONTRACTS (AUG 1998) - ALTERNATE I (AUG 1998)

(a) Definitions. As used in this clause--

Approved purchasing system means a Contractor's purchasing system that has been reviewed and approved in accordance with Part 44 of the Federal Acquisition Regulation (FAR).

Consent to subcontract means the Contracting Officer's written consent for the Contractor to enter into a particular subcontract.

Subcontract means any contract, as defined in FAR Subpart 2.1, entered into by a subcontractor to furnish supplies or services for performance of the prime contract or a subcontract. It includes, but is not limited to, purchase orders, and changes and modifications to purchase orders.

(b) This clause does not apply to subcontracts for special test equipment when the contract contains the clause at FAR 52.245-18, Special Test Equipment.

(c) When this clause is included in a fixed-price type contract, consent to subcontract is required only on unpriced contract actions (including unpriced modifications or unpriced delivery orders), and only if required in accordance with paragraph (d) or (e) of this clause.

(d) If the Contractor does not have an approved purchasing system, consent to subcontract is required for any subcontract that--

(1) Is of the cost-reimbursement, time-and-materials, or labor-hour type; or

(2) Is fixed-price and exceeds--

(i) For a contract awarded by the Department of Defense, the Coast Guard, or the National Aeronautics and Space Administration, the greater of the simplified acquisition threshold or 5 percent of the total estimated cost of the contract; or

(ii) For a contract awarded by a civilian agency other than the Coast Guard and the National Aeronautics and Space Administration, either the simplified acquisition threshold or 5 percent of the total estimated cost of the contract.

(e) If the Contractor has an approved purchasing system, the Contractor nevertheless shall obtain the Contracting Officer's written consent before placing the following subcontracts:

N/A

(f)(1) The Contractor shall notify the Contracting Officer reasonably in advance of placing any subcontract or modification thereof for which consent is required under paragraph (c), (d), or (e) of this clause, including the following information:

(i) A description of the supplies or services to be subcontracted.

(ii) Identification of the type of subcontract to be used.

(iii) Identification of the proposed subcontractor.

(iv) The proposed subcontract price.

(v) The subcontractor's current, complete, and accurate cost or pricing data and Certificate of Current Cost or Pricing Data, if required by other contract provisions.

(vi) The subcontractor's Disclosure Statement or Certificate relating to Cost Accounting Standards when such data are required by other provisions of this contract.

(vii) A negotiation memorandum reflecting--

(A) The principal elements of the subcontract price negotiations;

(B) The most significant considerations controlling establishment of initial or revised prices;

(C) The reason cost or pricing data were or were not required;

(D) The extent, if any, to which the Contractor did not rely on the subcontractor's cost or pricing data in determining the price objective and in negotiating the final price;

(E) The extent to which it was recognized in the negotiation that the subcontractor's cost or pricing data were not accurate, complete, or current; the action taken by the Contractor and the subcontractor; and the effect of any such defective data on the total price negotiated;

(F) The reasons for any significant difference between the Contractor's price objective and the price negotiated; and

(G) A complete explanation of the incentive fee or profit plan when incentives are used. The explanation shall identify each critical performance element, management decisions used to quantify each incentive element, reasons for the incentives, and a summary of all trade-off possibilities considered.

(2) If the Contractor has an approved purchasing system and consent is not required under paragraph (c), (d), or (e) of this clause, the Contractor nevertheless shall notify the Contracting Officer reasonably in advance of entering into any (i) cost-plus-fixed-fee subcontract, or (ii) fixed-price subcontract that exceeds

the greater of the simplified acquisition threshold or 5 percent of the total estimated cost of this contract. The notification shall include the information required by paragraphs (f)(1)(i) through (f)(1)(iv) of this clause.

(g) Unless the consent or approval specifically provides otherwise, neither consent by the Contracting Officer to any subcontract nor approval of the Contractor's purchasing system shall constitute a determination--

(1) Of the acceptability of any subcontract terms or conditions;

(2) Of the allowability of any cost under this contract; or

(3) To relieve the Contractor of any responsibility for performing this contract.

(h) No subcontract or modification thereof placed under this contract shall provide for payment on a cost-plus-a-percentage-of-cost basis, and any fee payable under cost-reimbursement type subcontracts shall not exceed the fee limitations in FAR 15.404-4(c)(4)(i).

(i) The Contractor shall give the Contracting Officer immediate written notice of any action or suit filed and prompt notice of any claim made against the Contractor by any subcontractor or vendor that, in the opinion of the Contractor, may result in litigation related in any way to this contract, with respect to which the Contractor may be entitled to reimbursement from the Government.

(j) The Government reserves the right to review the Contractor's purchasing system as set forth in FAR Subpart 44.3.

(k) Paragraphs (d) and (f) of this clause do not apply to the following subcontracts, which were evaluated during negotiations:
N/A

52.245-1 PROPERTY RECORDS (APR 1984)

The Government shall maintain the Government's official property records in connection with Government property under this contract. The Government Property clause is hereby modified by deleting the requirement for the Contractor to maintain such records.

52.245-5 TM GOVERNMENT PROPERTY (COST-REIMBURSEMENT, TIME-AND-MATERIAL, OR LABOR-HOUR CONTRACTS) (JAN 1986) (DEVIATION)

(a) Government-furnished property.

(1) The term "Contractor's managerial personnel," as used in paragraph (g) of this clause, means any of the Contractor's directors, officers, managers, superintendents, or equivalent representatives who have supervision or direction of--

(i) All or substantially all of the Contractor's business;

(ii) All or substantially all of the Contractor's operation at any one plant, or separate location at which the contract is being performed; or

(iii) A separate and complete major industrial operation connected with performing this contract.

(2) The Government shall deliver to the Contractor, for use in connection with and under the terms of this contract, the Government-furnished property described in the Schedule or specifications, together with such

related data and information as the Contractor may request and as may be reasonably required for the intended use of the property (hereinafter referred to as "Government-furnished property").

(3) The delivery or performance dates for this contract are based upon the expectation that Government-furnished property suitable for use will be delivered to the Contractor at the times stated in the Schedule or, if not so stated, in sufficient time to enable the Contractor to meet the contract's delivery or performance dates.

(4) If Government-furnished property is received by the Contractor in a condition not suitable for the intended use, the Contractor shall, upon receipt, notify the Contracting Officer, detailing the facts, and, as directed by the Contracting Officer and at Government expense, either effect repairs or modification or return or otherwise dispose of the property. After completing the directed action and upon written request of the Contractor, the Contracting Officer shall make an equitable adjustment as provided in paragraph (h) of this clause.

(5) If Government-furnished property is not delivered to the Contractor by the required time or times, the Contracting Officer shall, upon the Contractor's timely written request, make a determination of the delay, if any, caused the Contractor and shall make an equitable adjustment in accordance with paragraph (h) of this clause.

(b) Changes in Government-furnished property.

(1) The Contracting Officer may, by written notice,

(i) decrease the Government-furnished property provided or to be provided under this contract or

(ii) substitute other Government-furnished property for the property to be provided by the Government or to be acquired by the Contractor for the Government under this contract. The Contractor shall promptly take such action as the Contracting Officer may direct regarding the removal, shipment, or disposal of the property covered by this notice.

(2) Upon the Contractor's written request, the Contracting Officer shall make an equitable adjustment to the contract in accordance with paragraph (h) of this clause, if the Government has agreed in the Schedule to make such property available for performing this contract and there is any--

(i) Decrease or substitution in this property pursuant to subparagraph (b)(1) above; or

(ii) Withdrawal of authority to use property, if provided under any other contract or lease.

(c) Title. (1) The Government shall retain title to all Government-furnished property.

(2) Title to all property purchased by the Contractor for which the Contractor is entitled to be reimbursed as a direct item of cost under this contract shall pass to and vest in the Government upon the vendor's delivery of such property.

(3) Title to all other property, the cost of which is reimbursable to the Contractor, shall pass to and vest in the Government upon--

(i) Issuance of the property for use in contract performance;

(ii) Commencement of processing of the property for use in contract performance; or

(iii) Reimbursement of the cost of the property by the Government, whichever occurs first.

(4) All Government-furnished property and all property acquired by the Contractor, title to which vests in the Government under this paragraph (collectively referred to as "Government property"), are subject to the

provisions of this clause. Title to Government property shall not be affected by its incorporation into or attachment to any property not owned by the Government, nor shall Government property become a fixture or lose its identity as personal property by being attached to any real property.

(d) Use of Government property. The Government property shall be used only for performing this contract, unless otherwise provided in this contract or approved by the Contracting Officer.

(e) Property administration.

(1) The Contractor shall be responsible and accountable for all Government property provided under the contract and shall comply with Federal Acquisition Regulation (FAR) Subpart 45.5, as in effect on the date of this contract.

(2) The Contractor shall establish and maintain a program for the use, maintenance, repair, protection, and preservation of Government property in accordance with sound business practice and the applicable provisions of FAR Subpart 45.5.

(3) If damage occurs to Government property, the risk of which has been assumed by the Government under this contract, the Government shall replace the items or the Contractor shall make such repairs as the Government directs. However, if the Contractor cannot effect such repairs within the time required, the Contractor shall dispose of the property as directed by the Contracting Officer. When any property for which the Government is responsible is replaced or repaired, the Contracting Officer shall make an equitable adjustment in accordance with paragraph (h) of this clause.

(f) Access. The Government and all its designees shall have access at all reasonable times to the premises in which any Government property is located for the purpose of inspecting the Government property.

(g) Limited risk of loss.

(1) The Contractor shall not be liable for loss or destruction of, or damage to, the Government property provided under this contract or for expenses incidental to such loss, destruction, or damage, except as provided in subparagraphs (2) and (3) below.

(2) The Contractor shall be responsible for loss or destruction of, or damage to, the Government property provided under this contract (including expenses incidental to such loss, destruction, or damage)--

(i) That results from a risk expressly required to be insured under this contract, but only to the extent of the insurance required to be purchased and maintained or to the extent of insurance actually purchased and maintained, whichever is greater;

(ii) That results from a risk that is in fact covered by insurance or for which the Contractor is otherwise reimbursed, but only to the extent of such insurance or reimbursement;

(iii) For which the Contractor is otherwise responsible under the express terms of this contract;

(iv) That results from willful misconduct or lack of good faith on the part of the Contractor's managerial personnel; or

(v) That results from a failure on the part of the Contractor, due to willful misconduct or lack of good faith on the part of the Contractor's managerial personnel, to establish and administer a program or system for the control, use, protection, preservation, maintenance, and repair of Government property as required by paragraph (e) of this clause.

(3)(i) If the Contractor fails to act as provided by subdivision (g)(2)(v) above, after being notified (by certified mail addressed to one of the Contractor's managerial personnel) of the Government's disapproval, withdrawal of approval, or nonacceptance of the system or program, it shall be conclusively presumed that

such failure was due to willful misconduct or lack of good faith on the part of the Contractor's managerial personnel.

(ii) In such event, any loss or destruction of, or damage to, the Government property shall be presumed to have resulted from such failure unless the Contractor can establish by clear and convincing evidence that such loss, destruction, or damage--

(A) Did not result from the Contractor's failure to maintain an approved program or system; or

(B) Occurred while an approved program or system was maintained by the Contractor.

(4) If the Contractor transfers Government property to the possession and control of a subcontractor, the transfer shall not affect the liability of the Contractor for loss or destruction of, or damage to, the property as set forth above. However, the Contractor shall require the subcontractor to assume the risk of, and be responsible for, any loss or destruction of, or damage to, the property while in the subcontractor's possession or control, except to the extent that the subcontract, with the advance approval of the Contracting Officer, relieves the subcontractor from such liability. In the absence of such approval, the subcontract shall contain appropriate provisions requiring the return of all Government property in as good condition as when received, except for reasonable wear and tear or for its use in accordance with the provisions of the prime contract.

(5) The contractor shall notify the contracting officer u]pon loss or destruction of, or damage to, government property provided under this contract, with the exception of low value property for which loss, damage, or destruction is reported at contract termination, completion, or when needed for continued contract performance. The Contractor shall take all reasonable action to protect the Government property from further damage, separate the damaged and undamaged Government property, put all the affected Government property in the best possible order, and furnish to the Contracting Officer a statement of--

(6) The lost, destroyed, or damaged Government property;

(ii) The time and origin of the loss, destruction, or damage;

(iii) All known interests in commingled property of which the Government property is a part; and

(iv) The insurance, if any, covering any part of or interest in such commingled property.

(6) The Contractor shall repair, renovate, and take such other action with respect to damaged Government property as the Contracting Officer directs. If the Government property is destroyed or damaged beyond practical repair, or is damaged and so commingled or combined with property of others (including the Contractor's) that separation is impractical, the Contractor may, with the approval of and subject to any conditions imposed by the Contracting Officer, sell such property for the account of the Government. Such sales may be made in order to minimize the loss to the Government, to permit the resumption of business, or to accomplish a similar purpose. The Contractor shall be entitled to an equitable adjustment in the contract price for the expenditures made in performing the obligations under this subparagraph (g)(6) in accordance with paragraph (h) of this clause. However, the Government may directly reimburse the loss and salvage organization for any of their charges. The Contracting Officer shall give due regard to the Contractor's liability under this paragraph (g) when making any such equitable adjustment.

(7) The Contractor shall not be reimbursed for, and shall not include as an item of overhead, the cost of insurance or of any reserve covering risk of loss or destruction of, or damage to, Government property, except to the extent that the Government may have expressly required the Contractor to carry such insurance under another provision of this contract.

(8) In the event the Contractor is reimbursed or otherwise compensated for any loss or destruction of, or damage to, Government property, the Contractor shall use the proceeds to repair, renovate, or replace the

lost, destroyed, or damaged Government property or shall otherwise credit the proceeds to, or equitably reimburse, the Government, as directed by the Contracting Officer.

(9) The Contractor shall do nothing to prejudice the Government's rights to recover against third parties for any loss or destruction of, or damage to, Government property. Upon the request of the Contracting Officer, the Contractor shall, at the Government's expense, furnish to the Government all reasonable assistance and cooperation (including the prosecution of suit and the execution of instruments of assignment in favor of the Government) in obtaining recovery. In addition, where a subcontractor has not been relieved from liability for any loss or destruction of, or damage to, Government property, the Contractor shall enforce for the benefit of the Government the liability of the subcontractor for such loss, destruction, or damage.

(h) Equitable adjustment. When this clause specifies an equitable adjustment, it shall be made to any affected contract provision in accordance with the procedures of the Changes clause. When appropriate, the Contracting Officer may initiate an equitable adjustment in favor of the Government. The right to an equitable adjustment shall be the Contractor's exclusive remedy. The Government shall not be liable to suit for breach of contract for--

(1) Any delay in delivery of Government-furnished property;

(2) Delivery of Government-furnished property in a condition not suitable for its intended use;

(3) A decrease in or substitution of Government-furnished property; or

(4) Failure to repair or replace Government property for which the Government is responsible.

(i) Final accounting and disposition of Government property. Upon completing this contract, or at such earlier dates as may be fixed by the Contracting Officer, the Contractor shall submit, in a form acceptable to the Contracting Officer, inventory schedules covering all items of Government property not consumed in performing this contract or delivered to the Government. The Contractor shall prepare for shipment, deliver f.o.b. origin, or dispose of the Government property as may be directed or authorized by the Contracting Officer. The net proceeds of any such disposal shall be credited to the cost of the work covered by this contract or paid to the Government as directed by the Contracting Officer. The foregoing provisions shall apply to scrap from Government property; provided, however, that the Contracting Officer may authorize or direct the Contractor to omit from such inventory schedules any scrap consisting of faulty castings or forgings or of cutting and processing waste, such as chips, cuttings, borings, turnings, short ends, circles, trimmings, clippings, and remnants, and to dispose of such scrap in accordance with the Contractor's normal practice and account for it as a part of general overhead or other reimbursable costs in accordance with the Contractor's established accounting procedures.

(j) Abandonment and restoration of Contractor premises. Unless otherwise provided herein, the Government--

(1) May abandon any Government property in place, at which time all obligations of the Government regarding such abandoned property shall cease; and

(2) Has no obligation to restore or rehabilitate the Contractor's premises under any circumstances (e.g., abandonment, disposition upon completion of need, or contract completion). However, if the Government-furnished property (listed in the Schedule or specifications) is withdrawn or is unsuitable for the intended use, or if other Government property is substituted, then the equitable adjustment under paragraph (h) of this clause may properly include restoration or rehabilitation costs.

(k) Communications. All communications under this clause shall be in writing.

(l) Overseas contracts. If this contract is to be performed outside the United States of America, its territories, or possessions, the words "Government" and "Government-furnished" (wherever they appear in

this clause) shall be construed as "United States Government" and "United States Government-furnished," respectively.

(End of clause)

(End of clause)

52.246-4 SVC INSPECTION OF SERVICES--FIXED-PRICE (AUG 1996)

(a) Definitions. "Services," as used in this clause, includes services performed, workmanship, and material furnished or utilized in the performance of services.

(b) The Contractor shall provide and maintain an inspection system acceptable to the Government covering the services under this contract. Complete records of all inspection work performed by the Contractor shall be maintained and made available to the Government during contract performance and for as long afterwards as the contract requires.

(c) The Government has the right to inspect and test all services called for by the contract, to the extent practicable at all times and places during the term of the contract. The Government shall perform inspections and tests in a manner that will not unduly delay the work.

(d) If the Government performs inspections or tests on the premises of the Contractor or a subcontractor, the Contractor shall furnish, and shall require subcontractors to furnish, at no increase in contract price, all reasonable facilities and assistance for the safe and convenient performance of these duties.

(e) If any of the services do not conform with contract requirements, the Government may require the Contractor to perform the services again in conformity with contract requirements, at no increase in contract amount. When the defects in services cannot be corrected by reperformance, the Government may (1) require the Contractor to take necessary action to ensure that future performance conforms to contract requirements and (2) reduce the contract price to reflect the reduced value of the services performed.

(f) If the Contractor fails to promptly perform the services again or to take the necessary action to ensure future performance in conformity with contract requirements, the Government may (1) by contract or otherwise, perform the services and charge to the Contractor any cost incurred by the Government that is directly related to the performance of such service or (2) terminate the contract for default.

52.246-6 TM INSPECTION--TIME-AND-MATERIAL AND LABOR-HOUR (JAN 1986)

(a) Definitions. "Contractor's managerial personnel," as used in this clause, means any of the Contractor's directors, officers, managers, superintendents, or equivalent representatives who have supervision or direction of--

(1) All or substantially all of the Contractor's business;

(2) All or substantially all of the Contractor's operation at any one plant or separate location at which the contract is being performed; or

(3) A separate and complete major industrial operation connected with the performance of this contract.

"Materials," as used in this clause, includes data when the contract does not include the Warranty of Data clause.

(b) The Contractor shall provide and maintain an inspection system acceptable to the Government covering

the material, fabricating methods, work, and services under this contract. Complete records of all inspection work performed by the Contractor shall be maintained and made available to the Government during contract performance and for as long afterwards as the contract requires.

(c) The Government has the right to inspect and test all materials furnished and services performed under this contract, to the extent practicable at all places and times, including the period of performance, and in any event before acceptance. The Government may also inspect the plant or plants of the Contractor or any subcontractor engaged in contract performance. The Government shall perform inspections and tests in a manner that will not unduly delay the work.

(d) If the Government performs inspection or test on the premises of the Contractor or a subcontractor, the Contractor shall furnish and shall require subcontractors to furnish all reasonable facilities and assistance for the safe and convenient performance of these duties.

(e) Unless otherwise specified in the contract, the Government shall accept or reject services and materials at the place of delivery as promptly as practicable after delivery, and they shall be presumed accepted 60 days after the date of delivery, unless accepted earlier.

(f) At any time during contract performance, but not later than 6 months (or such other time as may be specified in the contract) after acceptance of the services or materials last delivered under this contract, the Government may require the Contractor to replace or correct services or materials that at time of delivery failed to meet contract requirements. Except as otherwise specified in paragraph (h) of this clause, the cost of replacement or correction shall be determined under the Payments Under Time-and-Materials and Labor-Hour Contracts clause, but the "hourly rate" for labor hours incurred in the replacement or correction shall be reduced to exclude that portion of the rate attributable to profit. The Contractor shall not tender for acceptance materials and services required to be replaced or corrected without disclosing the former requirement for replacement or correction, and, when required, shall disclose the corrective action taken.

(g)(1) If the Contractor fails to proceed with reasonable promptness to perform required replacement or correction, and if the replacement or correction can be performed within the ceiling price (or the ceiling price as increased by the Government), the Government may--

(i) By contract or otherwise, perform the replacement or correction, charge to the Contractor any increased cost, or deduct such increased cost from any amounts paid or due under this contract; or

(ii) Terminate this contract for default.

(2) Failure to agree to the amount of increased cost to be charged to the Contractor shall be a dispute.

(h) Notwithstanding paragraphs (f) and (g) above, the Government may at any time require the Contractor to remedy by correction or replacement, without cost to the Government, any failure by the Contractor to comply with the requirements of this contract, if the failure is due to (1) fraud, lack of good faith, or willful misconduct on the part of the Contractor's managerial personnel or (2) the conduct of one or more of the Contractor's employees selected or retained by the Contractor after any of the Contractor's managerial personnel has reasonable grounds to believe that the employee is habitually careless or unqualified. (i) This clause applies in the same manner and to the same extent to corrected or replacement materials or services as to materials and services originally delivered under this contract.

(j) The Contractor has no obligation or liability under this contract to correct or replace materials and services that at time of delivery do not meet contract requirements, except as provided in this clause or as may be otherwise specified in the contract.

(k) Unless otherwise specified in the contract, the Contractor's obligation to correct or replace Government-furnished property shall be governed by the clause pertaining to Government property.

52.246-12 C INSPECTION OF CONSTRUCTION (AUG 1996)

(a) Definition. "Work" includes, but is not limited to, materials, workmanship, and manufacture and fabrication of components.

(b) The Contractor shall maintain an adequate inspection system and perform such inspections as will ensure that the work performed under the contract conforms to contract requirements. The Contractor shall maintain complete inspection records and make them available to the Government. All work shall be conducted under the general direction of the Contracting Officer and is subject to Government inspection and test at all places and at all reasonable times before acceptance to ensure strict compliance with the terms of the contract.

(c) Government inspections and tests are for the sole benefit of the Government and do not--

(1) Relieve the Contractor of responsibility for providing adequate quality control measures;

(2) Relieve the Contractor of responsibility for damage to or loss of the material before acceptance;

(3) Constitute or imply acceptance; or

(4) Affect the continuing rights of the Government after acceptance of the completed work under paragraph (i) of this section.

(d) The presence or absence of a Government inspector does not relieve the Contractor from any contract requirement, nor is the inspector authorized to change any term or condition of the specification without the Contracting Officer's written authorization.

(e) The Contractor shall promptly furnish, at no increase in contract price, all facilities, labor, and material reasonably needed for performing such safe and convenient inspections and tests as may be required by the Contracting Officer. The Government may charge to the Contractor any additional cost of inspection or test when work is not ready at the time specified by the Contractor for inspection or test, or when prior rejection makes reinspection or retest necessary. The Government shall perform all inspections and tests in a manner that will not unnecessarily delay the work. Special, full size, and performance tests shall be performed as described in the contract.

(f) The Contractor shall, without charge, replace or correct work found by the Government not to conform to contract requirements, unless in the public interest the Government consents to accept the work with an appropriate adjustment in contract price. The Contractor shall promptly segregate and remove rejected material from the premises.

(g) If the Contractor does not promptly replace or correct rejected work, the Government may (1) by contract or otherwise, replace or correct the work and charge the cost to the Contractor or (2) terminate for default the Contractor's right to proceed.

(h) If, before acceptance of the entire work, the Government decides to examine already completed work by removing it or tearing it out, the Contractor, on request, shall promptly furnish all necessary facilities, labor, and material. If the work is found to be defective or nonconforming in any material respect due to the fault of the Contractor or its subcontractors, the Contractor shall defray the expenses of the examination and of satisfactory reconstruction. However, if the work is found to meet contract requirements, the Contracting Officer shall make an equitable adjustment for the additional services involved in the examination and reconstruction, including, if completion of the work was thereby delayed, an extension of time.

(i) Unless otherwise specified in the contract, the Government shall accept, as promptly as practicable after

completion and inspection, all work required by the contract or that portion of the work the Contracting Officer determines can be accepted separately. Acceptance shall be final and conclusive except for latent defects, fraud, gross mistakes amounting to fraud, or the Government's rights under any warranty or guarantee.

52.246-21 C WARRANTY OF CONSTRUCTION (MAR 1994)

(a) In addition to any other warranties in this contract, the Contractor warrants, except as provided in paragraph (i) of this clause, that work performed under this contract conforms to the contract requirements and is free of any defect in equipment, material, or design furnished, or workmanship performed by the Contractor or any subcontractor or supplier at any tier.

(b) This warranty shall continue for a period of 1 year from the date of final acceptance of the work. If the Government takes possession of any part of the work before final acceptance, this warranty shall continue for a period of 1 year from the date the Government takes possession.

(c) The Contractor shall remedy at the Contractor's expense any failure to conform, or any defect. In addition, the Contractor shall remedy at the Contractor's expense any damage to Government-owned or controlled real or personal property, when that damage is the result of--

(1) The Contractor's failure to conform to contract requirements; or

(2) Any defect of equipment, material, workmanship, or design furnished.

(d) The Contractor shall restore any work damaged in fulfilling the terms and conditions of this clause. The Contractor's warranty with respect to work repaired or replaced will run for 1 year from the date of repair or replacement.

(e) The Contracting Officer shall notify the Contractor, in writing, within a reasonable time after the discovery of any failure, defect, or damage.

(f) If the Contractor fails to remedy any failure, defect, or damage within a reasonable time after receipt of notice, the Government shall have the right to replace, repair, or otherwise remedy the failure, defect, or damage at the Contractor's expense.
(g) With respect to all warranties, express or implied, from subcontractors, manufacturers, or suppliers for work performed and materials furnished under this contract, the Contractor shall--

(1) Obtain all warranties that would be given in normal commercial practice;

(2) Require all warranties to be executed, in writing, for the benefit of the Government, if directed by the Contracting Officer; and

(3) Enforce all warranties for the benefit of the Government, if directed by the Contracting Officer.

(h) In the event the Contractor's warranty under paragraph (b) of this clause has expired, the Government may bring suit at its expense to enforce a subcontractor's, manufacturer's, or supplier's warranty.

(i) Unless a defect is caused by the negligence of the Contractor or subcontractor or supplier at any tier, the Contractor shall not be liable for the repair of any defects of material or design furnished by the Government nor for the repair of any damage that results from any defect in Government-furnished material or design.

(j) This warranty shall not limit the Government's rights under the Inspection and Acceptance clause of this contract with respect to latent defects, gross mistakes, or fraud.

(End of clause)

52.246-25 SVC LIMITATION OF LIABILITY--SERVICES (FEB 1997)

(a) Except as provided in paragraphs (b) and (c) below, and except to the extent that the Contractor is expressly responsible under this contract for deficiencies in the services required to be performed under it (including any materials furnished in conjunction with those services), the Contractor shall not be liable for loss of or damage to property of the Government that (1) occurs after Government acceptance of services performed under this contract, and (2) results from any defects or deficiencies in the services performed or materials furnished.

(b) The limitation of liability under paragraph (a) above shall not apply when a defect or deficiency in, or the Government's acceptance of, services performed or materials furnished results from willful misconduct or lack of good faith on the part of any of the Contractor's managerial personnel. The term "Contractor's managerial personnel," as used in this clause, means the Contractor's directors, officers, and any of the Contractor's managers, superintendents, or equivalent representatives who have supervision or direction of--

(1) All or substantially all of the Contractor's business;

(2) All or substantially all of the Contractor's operations at any one plant, laboratory, or separate location at which the contract is being performed; or

(3) A separate and complete major industrial operation connected with the performance of this contract.

(c) If the Contractor carries insurance, or has established a reserve for self-insurance, covering liability for loss or damage suffered by the Government through the Contractor's performance of services or furnishing of materials under this contract, the Contractor shall be liable to the Government, to the extent of such insurance or reserve, for loss of or damage to property of the Government occurring after Government acceptance of, and resulting from any defects and deficiencies in, services performed or materials furnished under this contract.

52.247-63 PREFERENCE FOR U.S.-FLAG AIR CARRIERS (JAN 1997)

(a) "International air transportation," as used in this clause, means transportation by air between a place in the United States and a place outside the United States or between two places both of which are outside the United States.

"United States," as used in this clause, means the 50 States, the District of Columbia, the Commonwealth of Puerto Rico, and possessions of the United States.

“U.S.-flag air carrier”, as used in this clause, means an air carrier holding a certificate under 49 U.S.C. Chapter 411.

(b) Section 5 of the International Air Transportation Fair Competitive Practices Act of 1974 (49 U.S.C. 40118) (Fly America Act) requires that all Federal agencies and Government contractors and subcontractors use U.S.-flag air carriers for U.S. Government-financed international air transportation of personnel (and their personal effects) or property, to the extent that service by those carriers is available. It requires the Comptroller General of the United States, in the absence of satisfactory proof of the necessity for foreign-flag air transportation, to disallow expenditures from funds, appropriated or otherwise established for the account of the United States, for international air transportation secured aboard a foreign-flag air carrier if a U.S.-flag air carrier is available to provide such services.

(c) The Contractor agrees, in performing work under this contract, to use U.S.-flag air carriers for international air transportation of personnel (and their personal effects) or property to the extent that service by those carriers is available.

(d) In the event that the Contractor selects a carrier other than a U.S.-flag air carrier for international air transportation, the Contractor shall include a statement on vouchers involving such transportation essentially as follows:

STATEMENT OF UNAVAILABILITY OF U.S.-FLAG AIR CARRIERS

International air transportation of persons (and their personal effects) or property by U.S.-flag air carrier was not available or it was necessary to use foreign-flag air carrier service for the following reasons (see section 47.403 of the Federal Acquisition Regulation): [State reasons]: _____

(End of statement)

(e) The Contractor shall include the substance of this clause, including this paragraph (e), in each subcontract or purchase under this contract that may involve international air transportation.

52.248-1 SVC VALUE ENGINEERING (FEB 2000)

(a) General. The Contractor is encouraged to develop, prepare, and submit value engineering change proposals (VECP's) voluntarily. The Contractor shall share in any net acquisition savings realized from accepted VECP's, in accordance with the incentive sharing rates in paragraph (f) below.

(b) Definitions. "**Acquisition** savings," as used in this clause, means savings resulting from the application of a VECP to contracts awarded by the same contracting office or its successor for essentially the same unit. Acquisition savings include--

(1) Instant contract savings, which are the net cost reductions on this, the instant contract, and which are equal to the instant unit cost reduction multiplied by the number of instant contract units affected by the VECP, less the Contractor's allowable development and implementation costs;

(2) Concurrent contract savings, which are net reductions in the prices of other contracts that are definitized and ongoing at the time the VECP is accepted; and

(3) Future contract savings, which are the product of the future unit cost reduction multiplied by the number of future contract units in the sharing base. On an instant contract, future contract savings include savings on increases in quantities after VECP acceptance that are due to contract modifications, exercise of options, additional orders, and funding of subsequent year requirements on a multiyear contract.

"Collateral costs," as used in this clause, means agency cost of operation, maintenance, logistic support, or Government-furnished property.

"Collateral savings," as used in this clause, means those measurable net reductions resulting from a VECP in the agency's overall projected collateral costs, exclusive of acquisition savings, whether or not the acquisition cost changes.

"Contracting office" includes any contracting office that the acquisition is transferred to, such as another branch of the agency or another agency's office that is performing a joint acquisition action.

"Contractor's development and implementation costs," as used in this clause, means those costs the Contractor incurs on a VECP specifically in developing, testing, preparing, and submitting the VECP, as well as those costs the Contractor incurs to make the contractual changes required by Government acceptance of a VECP.

"Future unit cost reduction," as used in this clause, means the instant unit cost reduction adjusted as the Contracting Officer considers necessary for projected learning or changes in quantity during the sharing

period. It is calculated at the time the VECP is accepted and applies either (1) throughout the sharing period, unless the Contracting Officer decides that recalculation is necessary because conditions are significantly different from those previously anticipated or (2) to the calculation of a lump-sum payment, which cannot later be revised.

"Government costs," as used in this clause, means those agency costs that result directly from developing and implementing the VECP, such as any net increases in the cost of testing, operations, maintenance, and logistics support. The term does not include the normal administrative costs of processing the VECP or any increase in this contract's cost or price resulting from negative instant contract savings.

"Instant contract," as used in this clause, means this contract, under which the VECP is submitted. It does not include increases in quantities after acceptance of the VECP that are due to contract modifications, exercise of options, or additional orders. If this is a multiyear contract, the term does not include quantities funded after VECP acceptance. If this contract is a fixed-price contract with prospective price redetermination, the term refers to the period for which firm prices have been established.

"Instant unit cost reduction" means the amount of the decrease in unit cost of performance (without deducting any Contractor's development or implementation costs) resulting from using the VECP on this, the instant contract. If this is a service contract, the instant unit cost reduction is normally equal to the number of hours per line-item task saved by using the VECP on this contract, multiplied by the appropriate contract labor rate.

"Negative instant contract savings" means the increase in the cost or price of this contract when the acceptance of a VECP results in an excess of the Contractor's allowable development and implementation costs over the product of the instant unit cost reduction multiplied by the number of instant contract units affected.

"Net acquisition savings" means total acquisition savings, including instant, concurrent, and future contract savings, less Government costs.

"Sharing base," as used in this clause, means the number of affected end items on contracts of the contracting office accepting the VECP.

Sharing period, as used in this clause, means the period beginning with acceptance of the first unit incorporating the VECP and ending at a calendar date or event determined by the contracting officer for each VECP.

"Unit," as used in this clause, means the item or task to which the Contracting Officer and the Contractor agree the VECP applies.

"Value engineering change proposal (VECP)" means a proposal that--

(1) Requires a change to this, the instant contract, to implement; and

(2) Results in reducing the overall projected cost to the agency without impairing essential functions or characteristics; provided, that it does not involve a change--

(i) In deliverable end item quantities only;

(ii) In research and development (R&D) end items or R&D test quantities that is due solely to results of previous testing under this contract; or

(iii) To the contract type only.

(c) VECP preparation. As a minimum, the Contractor shall include in each VECP the information described in subparagraphs (1) through (8) below. If the proposed change is affected by contractually required

configuration management or similar procedures, the instructions in those procedures relating to format, identification, and priority assignment shall govern VECP preparation. The VECP shall include the following:

(1) A description of the difference between the existing contract requirement and the proposed requirement, the comparative advantages and disadvantages of each, a justification when an item's function or characteristics are being altered, the effect of the change on the end item's performance, and any pertinent objective test data.

(2) A list and analysis of the contract requirements that must be changed if the VECP is accepted, including any suggested specification revisions.

(3) Identification of the unit to which the VECP applies.

(4) A separate, detailed cost estimate for (i) the affected portions of the existing contract requirement and (ii) the VECP. The cost reduction associated with the VECP shall take into account the Contractor's allowable development and implementation costs, including any amount attributable to subcontracts under the Subcontracts paragraph of this clause, below.

(5) A description and estimate of costs the Government may incur in implementing the VECP, such as test and evaluation and operating and support costs.

(6) A prediction of any effects the proposed change would have on collateral costs to the agency.

(7) A statement of the time by which a contract modification accepting the VECP must be issued in order to achieve the maximum cost reduction, noting any effect on the contract completion time or delivery schedule.

(8) Identification of any previous submissions of the VECP, including the dates submitted, the agencies and contract numbers involved, and previous Government actions, if known.

(d) Submission. The Contractor shall submit VECP's to the Contracting Officer, unless this contract states otherwise. If this contract is administered by other than the contracting office, the Contractor shall submit a copy of the VECP simultaneously to the Contracting Officer and to the Administrative Contracting Officer.

(e) Government action. (1) The Contracting Officer will notify the Contractor of the status of the VECP within 45 calendar days after the contracting office receives it. If additional time is required, the Contracting Officer will notify the Contractor within the 45-day period and provide the reason for the delay and the expected date of the decision. The Government will process VECP's expeditiously; however, it shall not be liable for any delay in acting upon a VECP.

(2) If the VECP is not accepted, the Contracting Officer will notify the Contractor in writing, explaining the reasons for rejection. The Contractor may withdraw any VECP, in whole or in part, at any time before it is accepted by the Government. The Contracting Officer may require that the Contractor provide written notification before undertaking significant expenditures for VECP effort.

(3) Any VECP may be accepted, in whole or in part, by the Contracting Officer's award of a modification to this contract citing this clause and made either before or within a reasonable time after contract performance is completed. Until such a contract modification applies a VECP to this contract, the Contractor shall perform in accordance with the existing contract. The decision to accept or reject all or part of any VECP is a unilateral decision made solely at the discretion of the Contracting Officer.

(f) Sharing rates. If a VECP is accepted, the Contractor shall share in net acquisition savings according to the percentages shown in the table below. The percentage paid the Contractor depends upon (1) this contract's type (fixed-price, incentive, or cost-reimbursement), (2) the sharing arrangement specified in

paragraph (a) above (incentive, program requirement, or a combination as delineated in the Schedule), and (3) the source of the savings (the instant contract, or concurrent and future contracts), as follows:

Contractor's Share of Net Acquisition Savings
[Figures in Percent]

Contract type	Sharing arrangement: Incentive (voluntary)		Sharing arrangement: Program requirement (mandatory)	
	Instant contract rate	Con-current and future contract rate	Instant contract rate	Con-current and future contract rate
Fixed-price (includes fixed-price-award-fee; excludes other fixed-price incentive contracts).....	\1\ 50	\1\ 50	25	25
Incentive (fixed-price or cost) (other than award fee).....	(\2\)	\1\ 50	(\2\)	25
Cost-reimbursement (includes cost-plus-award-fee; excludes other cost-type incentive contracts).....	\3\ 25	\3\ 25	15	15

\1\ The Contracting Officer may increase the Contractor's sharing rate to as high as 75 percent for each VECP.

\2\ Same sharing arrangement as the contract's profit or fee adjustment formula.

\3\ The Contracting Officer may increase the Contractor's sharing rate to as high as 50 percent for each VECP.

(g) Calculating net acquisition savings.

(1) Acquisition savings are realized when (i) the cost or price is reduced on the instant contract, (ii) reductions are negotiated in concurrent contracts, (iii) future contracts are awarded, or (iv) agreement is reached on a lump-sum payment for future contract savings (see subparagraph (i)(4) below). Net acquisition savings are first realized, and the Contractor shall be paid a share, when Government costs and any negative instant contract savings have been fully offset against acquisition savings.

(2) Except in incentive contracts, Government costs and any price or cost increases resulting from negative instant contract savings shall be offset against acquisition savings each time such savings are realized until they are fully offset. Then, the Contractor's share is calculated by multiplying net acquisition savings by the appropriate Contractor's percentage sharing rate (see paragraph (f) above). Additional Contractor shares of net acquisition savings shall be paid to the Contractor at the time realized.

(3) If this is an incentive contract, recovery of Government costs on the instant contract shall be deferred and offset against concurrent and future contract savings. The Contractor shall share through the contract incentive structure in savings on the instant contract items affected. Any negative instant contract savings shall be added to the target cost or to the target price and ceiling price, and the amount shall be offset against concurrent and future contract savings.

(4) If the Government does not receive and accept all items on which it paid the Contractor's share, the Contractor shall reimburse the Government for the proportionate share of these payments.

(h) Contract adjustment. The modification accepting the VECP (or a subsequent modification issued as soon as possible after any negotiations are completed) shall--

(1) Reduce the contract price or estimated cost by the amount of instant contract savings, unless this is an incentive contract;

(2) When the amount of instant contract savings is negative, increase the contract price, target price and ceiling price, target cost, or estimated cost by that amount;

(3) Specify the Contractor's dollar share per unit on future contracts, or provide the lump-sum payment;

(4) Specify the amount of any Government costs or negative instant contract savings to be offset in determining net acquisition savings realized from concurrent or future contract savings; and

(5) Provide the Contractor's share of any net acquisition savings under the instant contract in accordance with the following:

(i) Fixed-price contracts--add to contract price.

(ii) Cost-reimbursement contracts--add to contract fee.

(i) Concurrent and future contract savings.

(1) Payments of the Contractor's share of concurrent and future contract savings shall be made by a modification to the instant contract in accordance with subparagraph (h)(5) above. For incentive contracts, shares shall be added as a separate firm-fixed-price line item on the instant contract. The Contractor shall maintain records adequate to identify the first delivered unit for 3 years after final payment under this contract.

(2) The Contracting Officer shall calculate the Contractor's share of concurrent contract savings by (i) subtracting from the reduction in price negotiated on the concurrent contract any Government costs or negative instant contract savings not yet offset and (ii) multiplying the result by the Contractor's sharing rate.

(3) The Contracting Officer shall calculate the Contractor's share of future contract savings by (i) multiplying the future unit cost reduction by the number of future contract units scheduled for delivery during the sharing period, (ii) subtracting any Government costs or negative instant contract savings not yet offset, and (iii) multiplying the result by the Contractor's sharing rate.

(4) When the Government wishes and the Contractor agrees, the Contractor's share of future contract savings may be paid in a single lump sum rather than in a series of payments over time as future contracts are awarded. Under this alternate procedure, the future contract savings may be calculated when the VECP is accepted, on the basis of the Contracting Officer's forecast of the number of units that will be delivered during the sharing period. The Contractor's share shall be included in a modification to this contract (see subparagraph (h)(3) above) and shall not be subject to subsequent adjustment.

(5) Alternate no-cost settlement method. When, in accordance with subsection 48.104-4 of the Federal Acquisition Regulation, the Government and the Contractor mutually agree to use the no-cost settlement method, the following applies:

(i) The Contractor will keep all the savings on the instant contract and on its concurrent contracts only.

(ii) The Government will keep all the savings resulting from concurrent contracts placed on other sources, savings from all future contracts, and all collateral savings.

(j) Collateral savings. If a VECP is accepted, the Contracting Officer will increase the instant contract amount, as specified in paragraph (h)(5) of this clause, by a rate from 20 to 100 percent, as determined by the Contracting Officer, of any projected collateral savings determined to be realized in a typical year of use after subtracting any Government costs not previously offset. However, the Contractor's share of collateral savings will not exceed the contract's firm-fixed-price, target price, target cost, or estimated cost, at the time the VECP is accepted, or $100,000, whichever is greater. The Contracting Officer will be the sole determiner of the amount of collateral savings.

(k) Relationship to other incentives. Only those benefits of an accepted VECP not rewardable under performance, design-to-cost (production unit cost, operating and support costs, reliability and maintainability), or similar incentives shall be rewarded under this clause. However, the targets of such incentives affected by the VECP shall not be adjusted because of VECP acceptance. If this contract specifies targets but provides no incentive to surpass them, the value engineering sharing shall apply only to the amount of achievement better than target.

(l) Subcontracts. The Contractor shall include an appropriate value engineering clause in any subcontract of $100,000 or more and may include one in subcontracts of lesser value. In calculating any adjustment in this contract's price for instant contract savings (or negative instant contract savings), the Contractor's allowable development and implementation costs shall include any subcontractor's allowable development and implementation costs, and any value engineering incentive payments to a subcontractor, clearly resulting from a VECP accepted by the Government under this contract. The Contractor may choose any arrangement for subcontractor value engineering incentive payments; provided, that the payments shall not reduce the Government's share of concurrent or future contract savings or collateral savings.

(m) Data. The Contractor may restrict the Government's right to use any part of a VECP or the supporting data by marking the following legend on the affected parts:

"These data, furnished under the Value Engineering clause of contract . . . . . , shall not be disclosed outside the Government or duplicated, used, or disclosed, in whole or in part, for any purpose other than to evaluate a value engineering change proposal submitted under the clause. This restriction does not limit the Government's right to use information contained in these data if it has been obtained or is otherwise available from the Contractor or from another source without limitations."

If a VECP is accepted, the Contractor hereby grants the Government unlimited rights in the VECP and supporting data, except that, with respect to data qualifying and submitted as limited rights technical data, the Government shall have the rights specified in the contract modification implementing the VECP and shall appropriately mark the data. (The terms "unlimited rights" and "limited rights" are defined in Part 27 of the Federal Acquisition Regulation.)

(End of clause)

52.248-3 C VALUE ENGINEERING--CONSTRUCTION (FEB 2000) - ALTERNATE I (APR 1984)

(a) General. The Contractor is encouraged to develop, prepare, and submit value engineering change proposals (VECP's) voluntarily. The Contractor shall share in any instant contract savings realized from accepted VECP's, in accordance with paragraph (f) below.

(b) Definitions. "Collateral costs," as used in this clause, means agency costs of operation, maintenance, logistic support, or Government-furnished property.

"Collateral savings," as used in this clause, means those measurable net reductions resulting from a VECP in the agency's overall projected collateral costs, exclusive of acquisition savings, whether or not the acquisition cost changes.

"Contractor's development and implementation costs," as used in this clause, means those costs the Contractor incurs on a VECP specifically in developing, testing, preparing, and submitting the VECP, as well as those costs the Contractor incurs to make the contractual changes required by Government acceptance of a VECP.

"Government costs," as used in this clause, means those agency costs that result directly from developing and implementing the VECP, such as any net increases in the cost of testing, operations, maintenance, and logistic support. The term does not include the normal administrative costs of processing the VECP.

"Instant contract savings," as used in this clause, means the estimated reduction in Contractor cost of performance resulting from acceptance of the VECP, minus allowable Contractor's development and implementation costs, including subcontractors' development and implementation costs (see paragraph (h) below).

"Value engineering change proposal (VECP)" means a proposal that--

(1) Requires a change to this, the instant contract, to implement; and

(2) Results in reducing the contract price or estimated cost without impairing essential functions or characteristics; provided, that it does not involve a change--

(i) In deliverable end item quantities only; or

(ii) To the contract type only.

(c) VECP preparation. As a minimum, the Contractor shall include in each VECP the information described in subparagraphs (1) through (7) below. If the proposed change is affected by contractually required configuration management or similar procedures, the instructions in those procedures relating to format, identification, and priority assignment shall govern VECP preparation. The VECP shall include the following:

(1) A description of the difference between the existing contract requirement and that proposed, the comparative advantages and disadvantages of each, a justification when an item's function or characteristics are being altered, and the effect of the change on the end item's performance.

(2) A list and analysis of the contract requirements that must be changed if the VECP is accepted, including any suggested specification revisions.

(3) A separate, detailed cost estimate for (i) the affected portions of the existing contract requirement and (ii) the VECP. The cost reduction associated with the VECP shall take into account the Contractor's allowable development and implementation costs, including any amount attributable to subcontracts under paragraph (h) below.

(4) A description and estimate of costs the Government may incur in implementing the VECP, such as test and evaluation and operating and support costs.

(5) A prediction of any effects the proposed change would have on collateral costs to the agency.

(6) A statement of the time by which a contract modification accepting the VECP must be issued in order to achieve the maximum cost reduction, noting any effect on the contract completion time or delivery schedule.

(7) Identification of any previous submissions of the VECP, including the dates submitted, the agencies and contract numbers involved, and previous Government actions, if known.

(d) Submission. The Contractor shall submit VECP's to the Resident Engineer at the worksite, with a copy to the Contracting Officer.

(e) Government action. (1) The Contracting Officer shall notify the Contractor of the status of the VECP within 45 calendar days after the contracting office receives it. If additional time is required, the Contracting Officer shall notify the Contractor within the 45-day period and provide the reason for the delay and the expected date of the decision. The Government will process VECP's expeditiously; however, it shall not be liable for any delay in acting upon a VECP.

(2) If the VECP is not accepted, the Contracting Officer shall notify the Contractor in writing, explaining the reasons for rejection. The Contractor may withdraw any VECP, in whole or in part, at any time before it is accepted by the Government. The Contracting Officer may require that the Contractor provide written notification before undertaking significant expenditures for VECP effort.

(3) Any VECP may be accepted, in whole or in part, by the Contracting Officer's award of a modification to this contract citing this clause. The Contracting Officer may accept the VECP, even though an agreement on price reduction has not been reached, by issuing the Contractor a notice to proceed with the change. Until a notice to proceed is issued or a contract modification applies a VECP to this contract, the Contractor shall perform in accordance with the existing contract. The decision to accept or reject all or part of any VECP is a unilateral decision made solely at the discretion of the Contracting Officer.

(f) Sharing.

(1) Rates. The Government's share of savings is determined by subtracting Government costs from instant contract savings and multiplying the result by (i) 45 percent for fixed-price contracts or (ii) 75 percent for cost-reimbursement contracts.

(2) Payment. Payment of any share due the Contractor for use of a VECP on this contract shall be authorized by a modification to this contract to--

(i) Accept the VECP;

(ii) Reduce the contract price or estimated cost by the amount of instant contract savings; and

(iii) Provide the Contractor's share of savings by adding the amount calculated to the contract price or fee.

(g) Subcontracts. The Contractor shall include an appropriate value engineering clause in any subcontract of $50,000 or more and may include one in subcontracts of lesser value. In computing any adjustment in this contract's price under paragraph (f) above, the Contractor's allowable development and implementation costs shall include any subcontractor's allowable development and implementation costs clearly resulting from a VECP accepted by the Government under this contract, but shall exclude any value engineering incentive payments to a subcontractor. The Contractor may choose any arrangement for subcontractor value engineering incentive payments; provided, that these payments shall not reduce the Government's share of the savings resulting from the VECP.

(h) Data. The Contractor may restrict the Government's right to use any part of a VECP or the supporting data by marking the following legend on the affected parts:

"These data, furnished under the Value Engineering--Construction clause of contract . . . . . , shall not be disclosed outside the Government or duplicated, used, or disclosed, in whole or in part, for any purpose other than to evaluate a value engineering change proposal submitted under the clause. This restriction does not limit the Government's right to use information contained in these data if it has been obtained or is otherwise available from the Contractor or from another source without limitations."

If a VECP is accepted, the Contractor hereby grants the Government unlimited rights in the VECP and supporting data, except that, with respect to data qualifying and submitted as limited rights technical data,

the Government shall have the rights specified in the contract modification implementing the VECP and shall appropriately mark the data. (The terms "unlimited rights" and "limited rights" are defined in Part 27 of the Federal Acquisition Regulation.)

(j) Collateral savings. If a VECP is accepted, the Contracting Officer will increase the instant contract amount by 20 percent of any projected collateral savings determined to be realized in a typical year of use after subtracting any Government costs not previously offset. However, the Contractor's share of collateral savings will not exceed the contract's firm-fixed-price or estimated cost, at the time the VECP is accepted, or $100,000, whichever is greater. The Contracting Officer will be the sole determiner of the amount of collateral savings.

(End of clause)

52.249-2 C TERMINATION FOR CONVENIENCE OF THE GOVERNMENT (FIXED-PRICE) (SEP 1996) - ALTERNATE I (SEP 1996)

(a) The Government may terminate performance of work under this contract in whole or, from time to time, in part if the Contracting Officer determines that a termination is in the Government's interest. The Contracting Officer shall terminate by delivering to the Contractor a Notice of Termination specifying the extent of termination and the effective date.

(b) After receipt of a Notice of Termination, and except as directed by the Contracting Officer, the Contractor shall immediately proceed with the following obligations, regardless of any delay in determining or adjusting any amounts due under this clause:

(1) Stop work as specified in the notice.

(2) Place no further subcontracts or orders (referred to as subcontracts in this clause) for materials, services, or facilities, except as necessary to complete the continued portion of the contract.

(3) Terminate all subcontracts to the extent they relate to the work terminated.

(4) Assign to the Government, as directed by the Contracting Officer, all right, title, and interest of the Contractor under the subcontracts terminated, in which case the Government shall have the right to settle or to pay any termination settlement proposal arising out of those terminations.

(5) With approval or ratification to the extent required by the Contracting Officer, settle all outstanding liabilities and termination settlement proposals arising from the termination of subcontracts; the approval or ratification will be final for purposes of this clause.

(6) As directed by the Contracting Officer, transfer title and deliver to the Government (i) the fabricated or unfabricated parts, work in process, completed work, supplies, and other material produced or acquired for the work terminated, and (ii) the completed or partially completed plans, drawings, information, and other property that, if the contract had been completed, would be required to be furnished to the Government.

(7) Complete performance of the work not terminated.

(8) Take any action that may be necessary, or that the Contracting Officer may direct, for the protection and preservation of the property related to this contract that is in the possession of the Contractor and in which the Government has or may acquire an interest.

(9) Use its best efforts to sell, as directed or authorized by the Contracting Officer, any property of the types referred to in subparagraph (b)(6) of this clause; provided, however, that the Contractor (i) is not required to extend credit to any purchaser and (ii) may acquire the property under the conditions prescribed by, and at prices approved by, the Contracting Officer. The proceeds of any transfer or disposition will be

applied to reduce any payments to be made by the Government under this contract, credited to the price or cost of the work, or paid in any other manner directed by the Contracting Officer.

(c) The Contractor shall submit complete termination inventory schedules no later than 120 days from the effective date of termination, unless extended in writing by the Contracting Officer upon written request of the Contractor within this 120-day period.

(d) After expiration of the plant clearance period as defined in Subpart 45.6 of the Federal Acquisition Regulation, the Contractor may submit to the Contracting Officer a list, certified as to quantity and quality, of termination inventory not previously disposed of, excluding items authorized for disposition by the Contracting Officer. The Contractor may request the Government to remove those items or enter into an agreement for their storage. Within 15 days, the Government will accept title to those items and remove them or enter into a storage agreement. The Contracting Officer may verify the list upon removal of the items, or if stored, within 45 days from submission of the list, and shall correct the list, as necessary, before final settlement.

(e) After termination, the Contractor shall submit a final termination settlement proposal to the Contracting Officer in the form and with the certification prescribed by the Contracting Officer. The Contractor shall submit the proposal promptly, but no later than 1 year from the effective date of termination, unless extended in writing by the Contracting Officer upon written request of the Contractor within this 1-year period. However, if the Contracting Officer determines that the facts justify it, a termination settlement proposal may be received and acted on after 1 year or any extension. If the Contractor fails to submit the proposal within the time allowed, the Contracting Officer may determine, on the basis of information available, the amount, if any, due the Contractor because of the termination and shall pay the amount determined.

(f) Subject to paragraph (e) of this clause, the Contractor and the Contracting Officer may agree upon the whole or any part of the amount to be paid or remaining to be paid because of the termination. The amount may include a reasonable allowance for profit on work done. However, the agreed amount, whether under this paragraph (g) or paragraph (g) of this clause, exclusive of costs shown in subparagraph (g)(3) of this clause, may not exceed the total contract price as reduced by (1) the amount of payments previously made and (2) the contract price of work not terminated. The contract shall be modified, and the Contractor paid the agreed amount. Paragraph (g) of this clause shall not limit, restrict, or affect the amount that may be agreed upon to be paid under this paragraph.

(g) If the Contractor and Contracting Officer fail to agree on the whole amount to be paid the Contractor because of the termination of work, the Contracting Officer shall pay the Contractor the amounts determined as follows, but without duplication of any amounts agreed upon under paragraph (f) of this clause:

(1) For contract work performed before the effective date of termination, the total (without duplication of any items) of--

(i) The cost of this work;

(ii) The cost of settling and paying termination settlement proposals under terminated subcontracts that are properly chargeable to the terminated portion of the contract if not included in subdivision (g)(1)(i) of this clause; and

(iii) A sum, as profit on subdivision (g)(1)(i) of this clause, determined by the Contracting Officer under 49.202 of the Federal Acquisition Regulation, in effect on the date of this contract, to be fair and reasonable; however, if it appears that the Contractor would have sustained a loss on the entire contract had it been completed, the Contracting Officer shall allow no profit under this subdivision (iii) and shall reduce the settlement to reflect the indicated rate of loss.

(2) The reasonable costs of settlement of the work terminated, including--

(i) Accounting, legal, clerical, and other expenses reasonably necessary for the preparation of termination settlement proposals and supporting data;

(ii) The termination and settlement of subcontracts (excluding the amounts of such settlements); and

(iii) Storage, transportation, and other costs incurred, reasonably necessary for the preservation, protection, or disposition of the termination inventory.

(h) Except for normal spoilage, and except to the extent that the Government expressly assumed the risk of loss, the Contracting Officer shall exclude from the amounts payable to the Contractor under paragraph (g) of this clause, the fair value, as determined by the Contracting Officer, of property that is destroyed, lost, stolen, or damaged so as to become undeliverable to the Government or to a buyer.

(i) The cost principles and procedures of Part 31 of the Federal Acquisition Regulation, in effect on the date of this contract, shall govern all costs claimed, agreed to, or determined under this clause.

(j) The Contractor shall have the right of appeal, under the Disputes clause, from any determination made by the Contracting Officer under paragraph (e), (g), or (l) of this clause, except that if the Contractor failed to submit the termination settlement proposal or request for equitable adjustment within the time provided in paragraph (e) or (l), respectively, and failed to request a time extension, there is no right of appeal.

(k) In arriving at the amount due the Contractor under this clause, there shall be deducted--

(1) All unliquidated advance or other payments to the Contractor under the terminated portion of this contract;

(2) Any claim which the Government has against the Contractor under this contract; and

(3) The agreed price for, or the proceeds of sale of, materials, supplies, or other things acquired by the Contractor or sold under the provisions of this clause and not recovered by or credited to the Government.

(l) If the termination is partial, the Contractor may file a proposal with the Contracting Officer for an equitable adjustment of the price(s) of the continued portion of the contract. The Contracting Officer shall make any equitable adjustment agreed upon. Any proposal by the Contractor for an equitable adjustment under this clause shall be requested within 90 days from the effective date of termination unless extended in writing by the Contracting Officer.

(m)(1) The Government may, under the terms and conditions it prescribes, make partial payments and payments against costs incurred by the Contractor for the terminated portion of the contract, if the Contracting Officer believes the total of these payments will not exceed the amount to which the Contractor will be entitled.

(2) If the total payments exceed the amount finally determined to be due, the Contractor shall repay the excess to the Government upon demand, together with interest computed at the rate established by the Secretary of the Treasury under 50 U.S.C. App. 1215(b)(2). Interest shall be computed for the period from the date the excess payment is received by the Contractor to the date the excess is repaid. Interest shall not be charged on any excess payment due to a reduction in the Contractor's termination settlement proposal because of retention or other disposition of termination inventory until 10 days after the date of the retention or disposition, or a later date determined by the Contracting Officer because of the circumstances.

(n) Unless otherwise provided in this contract or by statute, the Contractor shall maintain all records and documents relating to the terminated portion of this contract for 3 years after final settlement. This includes all books and other evidence bearing on the Contractor's costs and expenses under this contract. The Contractor shall make these records and documents available to the Government, at the Contractor's office, at all reasonable times, without any direct charge. If approved by the Contracting Officer, photographs,

microphotographs, or other authentic reproductions may be maintained instead of original records and documents.

52.249-6 TM TERMINATION (COST-REIMBURSEMENT) (SEP 1996) - ALTERNATE IV (SEP 1996)

(a) The Government may terminate performance of work under this contract in whole or, from time to time, in part, if--

(1) The Contracting Officer determines that a termination is in the Government's interest; or

(2) The Contractor defaults in performing this contract and fails to cure the default within 10 days (unless extended by the Contracting Officer) after receiving a notice specifying the default. "Default" includes failure to make progress in the work so as to endanger performance.

(b) The Contracting Officer shall terminate by delivering to the Contractor a Notice of Termination specifying whether termination is for default of the Contractor or for convenience of the Government, the extent of termination, and the effective date. If, after termination for default, it is determined that the Contractor was not in default or that the Contractor's failure to perform or to make progress in performance is due to causes beyond the control and without the fault or negligence of the Contractor as set forth in the Excusable Delays clause, the rights and obligations of the parties will be the same as if the termination was for the convenience of the Government.

(c) After receipt of a Notice of Termination, and except as directed by the Contracting Officer, the Contractor shall immediately proceed with the following obligations, regardless of any delay in determining or adjusting any amounts due under this clause:

(1) Stop work as specified in the notice.

(2) Place no further subcontracts or orders (referred to as subcontracts in this clause), except as necessary to complete the continued portion of the contract.

(3) Terminate all subcontracts to the extent they relate to the work terminated.

(4) Assign to the Government, as directed by the Contracting Officer, all right, title, and interest of the Contractor under the subcontracts terminated, in which case the Government shall have the right to settle or to pay any termination settlement proposal arising out of those terminations.

(5) With approval or ratification to the extent required by the Contracting Officer, settle all outstanding liabilities and termination settlement proposals arising from the termination of subcontracts, the cost of which would be reimbursable in whole or in part, under this contract; approval or ratification will be final for purposes of this clause.

(6) Transfer title (if not already transferred) and, as directed by the Contracting Officer, deliver to the Government (i) the fabricated or unfabricated parts, work in process, completed work, supplies, and other material produced or acquired for the work terminated, (ii) the completed or partially completed plans, drawings, information, and other property that, if the contract had been completed, would be required to be furnished to the Government, and (iii) the jigs, dies, fixtures, and other special tools and tooling acquired or manufactured for this contract, the cost of which the Contractor has been or will be reimbursed under this contract.

(7) Complete performance of the work not terminated.

(8) Take any action that may be necessary, or that the Contracting Officer may direct, for the protection and preservation of the property related to this contract that is in the possession of the Contractor and in which the Government has or may acquire an interest.

(9) Use its best efforts to sell, as directed or authorized by the Contracting Officer, any property of the types referred to in subparagraph (c)(6) of this clause; provided, however, that the Contractor (i) is not required to extend credit to any purchaser and (ii) may acquire the property under the conditions prescribed by, and at prices approved by, the Contracting Officer. The proceeds of any transfer or disposition will be applied to reduce any payments to be made by the Government under this contract, credited to the price or cost of the work, or paid in any other manner directed by the Contracting Officer.

(d) The Contractor shall submit complete termination inventory schedules no later than 120 days from the effective date of termination, unless extended in writing by the Contracting Officer upon written request of the Contractor within this 120-day period.

(e) After expiration of the plant clearance period as defined in Subpart 45.6 of the Federal Acquisition Regulation, the Contractor may submit to the Contracting Officer a list, certified as to quantity and quality, of termination inventory not previously disposed of, excluding items authorized for disposition by the Contracting Officer. The Contractor may request the Government to remove those items or enter into an agreement for their storage. Within 15 days, the Government will accept the items and remove them or enter into a storage agreement. The Contracting Officer may verify the list upon removal of the items, or if stored, within 45 days from submission of the list, and shall correct the list, as necessary, before final settlement.

(f) After termination, the Contractor shall submit a final termination settlement proposal to the Contracting Officer in the form and with the certification prescribed by the Contracting Officer. The Contractor shall submit the proposal promptly, but no later than 1 year from the effective date of termination, unless extended in writing by the Contracting Officer upon written request of the Contractor within this 1-year period. However, if the Contracting Officer determines that the facts justify it, a termination settlement proposal may be received and acted on after 1 year or any extension. If the Contractor fails to submit the proposal within the time allowed, the Contracting Officer may determine, on the basis of information available, the amount, if any, due the Contractor because of the termination and shall pay the amount determined.

(g) Subject to paragraph (f) of this clause, the Contractor and the Contracting Officer may agree on the whole or any part of the amount to be paid (including an allowance for fee) because of the termination. The contract shall be amended, and the Contractor paid the agreed amount.

(h) If the Contractor and the Contracting Officer fail to agree in whole or in part on the amount to be paid because of the termination of work, the Contracting Officer shall determine, on the basis of information available, the amount, if any, due the Contractor and shall pay the amount determined as follows:

(1) If the termination is for the convenience of the Government, include--

(i) An amount for direct labor hours (as defined in the Schedule of the contract) determined by multiplying the number of direct labor hours expended before the effective date of termination by the hourly rate(s) in the Schedule, less any hourly rate payments already made to the Contractor;

(ii) An amount (computed under the provisions for payment of materials) for material expenses incurred before the effective date of termination, not previously paid to the Contractor;

(iii) An amount for labor and material expenses computed as if the expenses were incurred before the effective date of termination, if they are reasonably incurred after the effective date, with the approval of or as directed by the Contracting Officer; however, the Contractor shall discontinue these expenses as rapidly as practicable;

(iv) If not included in subdivision (h)(1)(i), (ii), or (iii) of this clause, the cost of settling and paying termination settlement proposals under terminated subcontracts that are properly chargeable to the terminated portion of the contract; and

(v) The reasonable costs of settlement of the work terminated, including--

(A) Accounting, legal, clerical, and other expenses reasonably necessary for the preparation of termination settlement proposals and supporting data;

(B) The termination and settlement of subcontracts (excluding the amounts of such settlements); and

(C) Storage, transportation, and other costs incurred, reasonably necessary for the protection or disposition of the termination inventory.

(2) If the termination is for default of the Contractor, include the amounts computed under subparagraph(h)(1) of this clause but omit--

(i) Any amount for preparation of the Contractor's termination settlement proposal; and

(ii) The portion of the hourly rate allocable to profit for any direct labor hours expended in furnishing materials and services not delivered to and accepted by the Government.

(i) The cost principles and procedures in Part 31 of the Federal Acquisition Regulation, in effect on the date of this contract, shall govern all costs claimed, agreed to, or determined under this clause.

(j) The Contractor shall have the right of appeal, under the Disputes clause, from any determination made by the Contracting Officer under paragraph (f) or (h) above or paragraph (l) of this clause, except that if the Contractor failed to submit the termination settlement proposal within the time provided in paragraph (f) and failed to request a time extension, there is no right of appeal. If the Contracting Officer has made a determination of the amount due under paragraph (f), (h) or (l) of this clause, the Government shall pay the Contractor (1) the amount determined by the Contracting Officer if there is no right of appeal or if no timely appeal has been taken, or (2) the amount finally determined on an appeal.

(k) In arriving at the amount due the Contractor under this clause, there shall be deducted--

(1) All unliquidated advance or other payments to the Contractor, under the terminated portion of this contract;

(2) Any claim which the Government has against the Contractor under this contract; and

(3) The agreed price for, or the proceeds of sale of materials, supplies, or other things acquired by the Contractor or sold under this clause and not recovered by or credited to the Government.

(l) If the termination is partial, the Contractor may file with the Contracting Officer a proposal for an equitable adjustment of price(s) for the continued portion of the contract. The Contracting Officer shall make any equitable adjustment agreed upon. Any proposal by the Contractor for an equitable adjustment under this clause shall be requested within 90 days from the effective date of termination, unless extended in writing by the Contracting Officer.

(m)(1) The Government may, under the terms and conditions it prescribes, make partial payments and payments against costs incurred by the Contractor for the terminated portion of the contract, if the Contracting Officer believes the total of these payments will not exceed the amount to which the Contractor will be entitled.

(2) If the total payments exceed the amount finally determined to be due, the Contractor shall repay the excess to the Government upon demand, together with interest computed at the rate established by the

Secretary of the Treasury under 50 U.S.C. App. 1215(b)(2). Interest shall be computed for the period from the date the excess payment is received by the Contractor to the date the excess is repaid. Interest shall not be charged on any excess payment due to a reduction in the Contractor's termination settlement proposal because of retention or other disposition of termination inventory until 10 days after the date of the retention or disposition, or a later date determined by the Contracting Officer because of the circumstances.

(n) The provisions of this clause relating to fee are inapplicable if this contract does not include a fee.

52.249-8 SVC DEFAULT (FIXED-PRICE SUPPLY AND SERVICE) (APR 1984)

(a)(1) The Government may, subject to paragraphs (c) and (d) of this clause, by written notice of default to the Contractor, terminate this contract in whole or in part if the Contractor fails to--

(i) Deliver the supplies or to perform the services within the time specified in this contract or any extension;

(ii) Make progress, so as to endanger performance of this contract (but see subparagraph (a)(2) of this clause); or

(iii) Perform any of the other provisions of this contract (but see subparagraph (a)(2) below).

(2) The Government's right to terminate this contract under subdivisions (a)(1)(ii) and (1)(iii) of this clause, may be exercised if the Contractor does not cure such failure within 10 days (or more if authorized in writing by the Contracting Officer) after receipt of the notice from the Contracting Officer specifying the failure.

(b) If the Government terminates this contract in whole or in part, it may acquire, under the terms and in the manner the Contracting Officer considers appropriate, supplies or services similar to those terminated, and the Contractor will be liable to the Government for any excess costs for those supplies or services. However, the Contractor shall continue the work not terminated.

(c) Except for defaults of subcontractors at any tier, the Contractor shall not be liable for any excess costs if the failure to perform the contract arises from causes beyond the control and without the fault or negligence of the Contractor. Examples of such causes include (1) acts of God or of the public enemy, (2) acts of the Government in either its sovereign or contractual capacity, (3) fires, (4) floods, (5) epidemics, (6) quarantine restrictions, (7) strikes, (8) freight embargoes, and (9) unusually severe weather. In each instance the failure to perform must be beyond the control and without the fault or negligence of the Contractor.

(d) If the failure to perform is caused by the default of a subcontractor at any tier, and if the cause of the default is beyond the control of both the Contractor and subcontractor, and without the fault or negligence of either, the Contractor shall not be liable for any excess costs for failure to perform, unless the subcontracted supplies or services were obtainable from other sources in sufficient time for the Contractor to meet the required delivery schedule.

(e) If this contract is terminated for default, the Government may require the Contractor to transfer title and deliver to the Government, as directed by the Contracting Officer, any (1) completed supplies, and (2) partially completed supplies and materials, parts, tools, dies, jigs, fixtures, plans, drawings, information, and contract rights (collectively referred to as "manufacturing materials" in this clause) that the Contractor has specifically produced or acquired for the terminated portion of this contract. Upon direction of the Contracting Officer, the Contractor shall also protect and preserve property in its possession in which the Government has an interest.

(f) The Government shall pay contract price for completed supplies delivered and accepted. The Contractor and Contracting Officer shall agree on the amount of payment for manufacturing materials delivered and

accepted and for the protection and preservation of the property. Failure to agree will be a dispute under the Disputes clause. The Government may withhold from these amounts any sum the Contracting Officer determines to be necessary to protect the Government against loss because of outstanding liens or claims of former lien holders.

(g) If, after termination, it is determined that the Contractor was not in default, or that the default was excusable, the rights and obligations of the parties shall be the same as if the termination had been issued for the convenience of the Government.

(h) The rights and remedies of the Government in this clause are in addition to any other rights and remedies provided by law or under this contract.

52.249-10 C DEFAULT (FIXED-PRICE CONSTRUCTION) (APR 1984)

(a) If the Contractor refuses or fails to prosecute the work or any separable part, with the diligence that will insure its completion within the time specified in this contract including any extension, or fails to complete the work within this time, the Government may, by written notice to the Contractor, terminate the right to proceed with the work (or the separable part of the work) that has been delayed. In this event, the Government may take over the work and complete it by contract or otherwise, and may take possession of and use any materials, appliances, and plant on the work site necessary for completing the work. The Contractor and its sureties shall be liable for any damage to the Government resulting from the Contractor's refusal or failure to complete the work within the specified time, whether or not the Contractor's right to proceed with the work is terminated. This liability includes any increased costs incurred by the Government in completing the work.

(b) The Contractor's right to proceed shall not be terminated nor the Contractor charged with damages under this clause, if--

(1) The delay in completing the work arises from unforeseeable causes beyond the control and without the fault or negligence of the Contractor. Examples of such causes include

(i) acts of God or of the public enemy,

(ii) acts of the Government in either its sovereign or contractual capacity,

(iii) acts of another Contractor in the performance of a contract with the Government,

(iv) fires,

(v) floods,

(vi) epidemics,

(vii) quarantine restrictions,

(viii) strikes,

(ix) freight embargoes,

(x) unusually severe weather, or delays of subcontractors or suppliers at any tier arising from unforeseeable causes beyond the control and without the fault or negligence of both the Contractor and the subcontractors or suppliers; and

(2) The Contractor, within 10 days from the beginning of any delay (unless extended by the Contracting Officer), notifies the Contracting Officer in writing of the causes of delay. The Contracting Officer shall

ascertain the facts and the extent of delay. If, in the judgment of the Contracting Officer, the findings of fact warrant such action, the time for completing the work shall be extended. The findings of the Contracting Officer shall be final and conclusive on the parties, but subject to appeal under the Disputes clause.

(c) If, after termination of the Contractor's right to proceed, it is determined that the Contractor was not in default, or that the delay was excusable, the rights and obligations of the parties will be the same as if the termination had been issued for the convenience of the Government.

The rights and remedies of the Government in this clause are in addition to any other rights and remedies provided by law or under this contract.

52.251-1 GOVERNMENT SUPPLY SOURCES (APR 1984)

The Contracting Officer may issue the Contractor an authorization to use Government supply sources in the performance of this contract. Title to all property acquired by the Contractor under such an authorization shall vest in the Government unless otherwise specified in the contract. Such property shall not be considered to be "Government-furnished property," as distinguished from "Government property." The provisions of the clause entitled "Government Property," except its paragraphs (a) and (b), shall apply to all property acquired under such authorization.

52.252-6 AUTHORIZED DEVIATIONS IN CLAUSES (APR 1984)

(a) The use in this solicitation or contract of any Federal Acquisition Regulation (48 CFR Chapter 1) clause with an authorized deviation is indicated by the addition of "(DEVIATION)" after the date of the clause.

(b) The use in this solicitation or contract of any _____ (48 CFR _____) clause with an authorized deviation is indicated by the addition of "(DEVIATION)" after the name of the regulation.

252.201-7000 CONTRACTING OFFICER'S REPRESENTATIVE (DEC 1991)

(a) "Definition. Contracting officer's representative" means an individual designated in accordance with subsection 201.602-2 of the Defense Federal Acquisition Regulation Supplement and authorized in writing by the contracting officer to perform specific technical or administrative functions.

(b) If the Contracting Officer designates a contracting officer's representative (COR), the Contractor will receive a copy of the written designation. It will specify the extent of the COR's authority to act on behalf of the contracting officer. The COR is not authorized to make any commitments or changes that will affect price, quality, quantity, delivery, or any other term or condition of the contract.

(End of clause)

252.203-7001 PROHIBITION ON PERSONS CONVICTED OF FRAUD OR OTHER DEFENSE-CONTRACT-RELATED FELONIES (MAR 1999)

(a) *Definitions*. As used in this clause—

(1) “Arising out of a contract with the DoD” means any act in connection with—

(i) Attempting to obtain;

(ii) Obtaining, or

(iii) Performing a contract or first-tier subcontract of any agency, department, or component of the Department of Defense (DoD).

(2) "Conviction of fraud or any other felony" means any conviction for fraud or a felony in violation of state or Federal criminal statutes, whether entered on a verdict or plea, including a plea of *nolo contendere*, for which sentence has been imposed.

(3) "Date of conviction" means the date judgment was entered against the individual.

(b) Any individual who is convicted after September 29, 1988, of fraud or any other felony arising out of a contract with the DoD is prohibited from serving--

(1) In a management or supervisory capacity on any DoD contract or first-tier subcontract;

(2) On the board of directors of any DoD contractor or first-tier subcontractor;

(3) As a consultant, agent, or representative for any DoD contractor or first-tier subcontractor; or

(4) In any other capacity with the authority to influence, advise, or control the decisions of any DoD contractor or subcontractor with regard to any DoD contract or first-tier subcontract.

(c) Unless waived, the prohibition in paragraph (b) of this clause applies for not less than 5 years from the date of conviction.

(d) 10 U.S.C. 2408 provides that a defense contractor or first-tier subcontractor shall be subject to a criminal penalty of not more than $500,000 if convicted of knowingly—

(1) Employing a person under a prohibition specified in paragraph (b) of this clause; or

(2) Allowing such a person to serve on the board of directors of the contractor or first-tier subcontractor.

(e) In addition to the criminal penalties contained in 10 U.S.C. 2408, the Government may consider other available remedies, such as—

(1) Suspension or debarment;

(2) Cancellation of the contract at no cost to the Government; or

(3) Termination of the contract for default.

(f) The Contractor may submit written requests for waiver of the prohibition in paragraph (b) of this clause to the Contracting Officer. Requests shall clearly identify—

(1) The person involved;

(2) The nature of the conviction and resultant sentence or punishment imposed;

(3) The reasons for the requested waiver; and

(4) An explanation of why a waiver is in the interest of national security.

(g) The Contractor agrees to include the substance of this clause, appropriately modified to reflect the identity and relationship of the parties, in all first-tier subcontracts exceeding the simplified acquisition

threshold in Part 2 of the Federal Acquisition Regulation, except those for commercial items or components.

(h) Pursuant to 10 U.S.C. 2408(c), defense contractors and subcontractors may obtain information as to whether a particular person has been convicted of fraud or any other felony arising out of a contract with the DoD by contacting The Office of Justice Programs, The Denial of Federal Benefits Office, U.S. Department of Justice, telephone (202) 616-3507.

(End of clause)

252.203-7002 DISPLAY OF DOD HOTLINE POSTER (DEC 1991)

(a) The Contractor shall display prominently in common work areas within business segments performing work under Department of Defense (DoD) contracts, DoD Hotline Posters prepared by the DoD Office of the Inspector General.

(b) DoD Hotline Posters may be obtained from the DoD Inspector General, ATTN: Defense Hotline, 400 Army Navy Drive, Washington, DC 22202-2884.

(c) The Contractor need not comply with paragraph (a) of this clause if it has established a mechanism, such as a hotline, by which employees may report suspected instances of improper conduct, and instructions that encourage employees to make such reports.

(End of clause)

252.204-7000 DISCLOSURE OF INFORMATION (DEC 1991)

(a) The Contractor shall not release to anyone outside the Contractor's organization any unclassified information, regardless of medium (e.g., film, tape, document), pertaining to any part of this contract or any program related to this contract, unless--

(1) The Contracting Officer has given prior written approval; or

(2) The information is otherwise in the public domain before the date of release.

(b) Requests for approval shall identify the specific information to be released, the medium to be used, and the purpose for the release. The Contractor shall submit its request to the Contracting Officer at least 45 days before the proposed date for release.

(c) The Contractor agrees to include a similar requirement in each subcontract under this contract. Subcontractors shall submit requests for authorization to release through the prime contractor to the Contracting Officer.

(End of clause)

252.204-7003 CONTROL OF GOVERNMENT PERSONNEL WORK PRODUCT (APR 1992)

The Contractor's procedures for protecting against unauthorized disclosure of information shall not require Department of Defense employees or members of the Armed Forces to relinquish control of their work products, whether classified or not, to the contractor.

(End of clause)

252.204-7004 REQUIRED CENTRAL CONTRACTOR REGISTRATION.(MAR 2000)

(a) Definitions.

As used in this clause--

(1) Central Contractor Registration (CCR database means the primary DoD repository for contractor information required for the conduct of business with DoD.

(2) Data Universal Numbering System (DUNS) number means the 9-digit number assigned by Dun and Bradstreet Information Services to identify unique business entities.

(3) Data Universal Numbering System +4 (DUNS+4) number means the DUNS number assigned by Dun and Bradstreet plus a 4-digit suffix that may be assigned by a parent (controlling) business concern. This 4-digit suffix may be assigned at the discretion of the parent business concern for such purposes as identifying subunits or affiliates of the parent business concern.

(4) Registered in the CCR database means that all mandatory information, including the DUNS number or the DUNS+4 number, if applicable, and the corresponding Commercial and Government Entity (CAGE) code, is in the CCR database; the DUNS number and the CAGE code have been validated; and all edits have been successfully completed.

(b)(1) By submission of an offer, the offeror acknowledges the requirement that a prospective awardee must be registered in the CCR database prior to award, during performance, and through final payment of any contract resulting from this solicitation, except for awards to foreign vendors for work to be performed outside the United States.

(2) The offeror shall provide its DUNS or, if applicable, its DUNS+4 number with its offer, which will be used by the Contracting Officer to verify that the offeror is registered in the CCR database.

(3) Lack of registration in the CCR database will make an offeror ineligible for award.

(4) DoD has established a goal of registering an applicant in the CCR database within 48 hours after receipt of a complete and accurate application via the Internet. However, registration of an applicant submitting an application through a method other than the Internet may take up to 30 days. Therefore, offerors that are not registered should consider applying for registration immediately upon receipt of this solicitation.

(c) The Contractor is responsible for the accuracy and completeness of the data within the CCR, and for any liability resulting from the Government's reliance on inaccurate or incomplete data. To remain registered in the CCR database after the initial registration, the Contractor is required to confirm on an annual basis that its information in the CCR database is accurate and complete.

(d) Offerors and contractors may obtain information on registration and annual confirmation requirements by calling 1-888-227-2423, or via the Internet at http://www.ccr2000.com.

(End of clause)

252.205-7000 PROVISION OF INFORMATION TO COOPERATIVE AGREEMENT HOLDERS (DEC 1991)

(a) Definition.

"Cooperative agreement holder" means a State or local government; a private, nonprofit organization; a tribal organization (as defined in section 4(c) of the Indian Self-Determination and Education Assistance Act (Pub. L. 93-268; 25 U.S.C. 450 (c))); or an economic enterprise (as defined in section 3(e) of the Indian Financing Act of 1974 (Pub. L. 93-362; 25 U.S.C. 1452(e))) whether such economic enterprise is

organized for profit or nonprofit purposes; which has an agreement with the Defense Logistics Agency to furnish procurement technical assistance to business entities.

(b) The Contractor shall provide cooperative agreement holders, upon their request, with a list of those appropriate employees or offices responsible for entering into subcontracts under defense contracts. The list shall include the business address, telephone number, and area of responsibility of each employee or office.

(c) The Contractor need not provide the listing to a particular cooperative agreement holder more frequently than once a year.

(End of clause)

252.209-7000 ACQUISITION FROM SUBCONTRACTORS SUBJECT TO ONSITE INSPECTION UNDER THE INTERMEDIATE-RANGE NUCLEAR FORCES (INF) TREATY (NOV 1995)

(a) The Contractor shall not deny consideration for a subcontract award under this contract to a potential subcontractor subject to on-site inspection under the INF Treaty, or a similar treaty, solely or in part because of the actual or potential presence of Soviet inspectors at the subcontractor's facility, unless the decision is approved by the Contracting Officer.

(b) The Contractor shall incorporate this clause, including this paragraph (b), in all solicitations and contracts exceeding the simplified acquisition threshold in part 13 of the Federal Acquisition Regulation, except those for commercial items.

252.209-7004 SUBCONTRACTING WITH FIRMS THAT ARE OWNED OR CONTROLLED BY THE GOVERNMENT OF A TERRORIST COUNTRY (MAR 1998)

(a) Unless the Government determines that there is a compelling reason to do so, the Contractor shall not enter into any subcontract in excess of $25,000 with a firm, or subsidiary of a firm, that is identified, on the List of Parties Excluded from Federal Procurement and Nonprocurement Programs, as being ineligible for the award of Defense contracts or subcontracts because it is owned or controlled by the government of a terrorist country.

(b) A corporate officer or a designee of the Contractor shall notify the Contracting Officer, in writing, before entering into a subcontract with a party that is identified, on the List of Parties Excluded from Federal Procurement and Nonprocurement Programs, as being ineligible for the award of Defense contracts or subcontracts because it is owned or controlled by the government of a terrorist country. The notice must include the name of the proposed subcontractor notwithstanding its inclusion on the List of Parties Excluded From Federal Procurement and Nonprocurement Programs.

252.215-7000 PRICING ADJUSTMENTS (DEC 1991)

The term "pricing adjustment," as used in paragraph (a) of the clauses entitled "Price Reduction for Defective Cost or Pricing Data - Modifications," "Subcontractor Cost or Pricing Data," and "Subcontractor Cost or Pricing Data - Modifications," means the aggregate increases and/or decreases in cost plus applicable profits.

252.219-7003 SMALL, SMALL DISADVANTAGED AND WOMEN-OWNED SMALL BUSINESS SUBCONTRACTING PLAN (DOD CONTRACTS) (APR. 1996)

This clause supplements the Federal Acquisition Regulation 52.219-9, Small, Small Disadvantaged and Women-Owned Small Business Subcontracting Plan, clause of this contract.

(a) *Definitions. Historically black colleges and universities*, as used in this clause, means institutions determined by the Secretary of Education to meet the requirements of 34 CFR 608.2. The term also means any nonprofit research institution that was an integral part of such a college or university before November 14, 1986.

Minority institutions, as used in this clause, means institutions meeting the requirements of section 1046(3) of the Higher Education Act of 1965 (20 U.S.C. 1135d-5(3)). The term also includes Hispanic-serving institutions as defined in section 316(b)(1) of such Act (20 U.S.C. 1059c(b)(1)).

(b) Except for company or division-wide commercial items subcontracting plans, the term *small disadvantaged business*, when used in the FAR 52.219-9 clause, includes historically black colleges and universities and minority institutions, in addition to small disadvantaged business concerns.

(c) Work under the contract or its subcontracts shall be credited toward meeting the small disadvantaged business concern goal required by paragraph (d) of the FAR 52.219-9 clause when:

(1) It is performed on Indian lands or in joint venture with an Indian tribe or a tribally-owned corporation, and

(2) It meets the requirements of 10 U.S.C. 2323a.

(d) Subcontracts awarded to workshops approved by the Committee for Purchase from People Who are Blind or Severely Disabled (41 U.S.C. 46-48), may be counted toward the Contractor's small business subcontracting goal.

(e) A mentor firm, under the Pilot Mentor-Protege Program established under Section 831 of Pub. L. 101-510, as amended, may count toward its small disadvantaged business goal, subcontracts awarded--

(f) The master plan approval referred to in paragraph (f) of the FAR 52.219-9 clause is approval by the Contractor's cognizant contract administration activity.

(g) In those subcontracting plans which specifically identify small, small disadvantaged, and women-owned small businesses, the Contractor shall notify the Administrative Contracting Officer of any substitutions of firms that are not small, small disadvantaged, or women-owned small businesses for the firms listed in the subcontracting plan. Notifications shall be in writing and shall occur within a reasonable period of time after award of the subcontract. Contractor-specified formats shall be acceptable.

(End of clause)

252.222-7000 C & SVC RESTRICTIONS ON EMPLOYMENT OF PERSONNEL (MAR 2000)

(a) The Contractor shall employ, for the purpose of performing that portion of the contract work in Hawaii, individuals who are residents thereof and who, in the case of any craft or trade, possess or would be able to acquire promptly the necessary skills to perform the contract.

(b) The Contractor shall insert the substance of this clause, including this paragraph (b), in each subcontract awarded under this contract.

(End of clause)

252.223-7001 HAZARD WARNING LABELS (DEC 1991)

(a) "Hazardous material," as used in this clause, is defined in the Hazardous Material Identification and Material Safety Data clause of this contract.

(b) The Contractor shall label the item package (unit container) of any hazardous material to be delivered under this contract in accordance with the Hazard Communication Standard (29 CFR 1910.1200 et seq). The Standard requires that the hazard warning label conform to the requirements of the standard unless the material is otherwise subject to the labeling requirements of one of the following statutes:

(1) Federal Insecticide, Fungicide and Rodenticide Act;

(2) Federal Food, Drug and Cosmetics Act;

(3) Consumer Product Safety Act;

(4) Federal Hazardous Substances Act; or

(5) Federal Alcohol Administration Act.

(c) The Offeror shall list which hazardous material listed in the Hazardous Material Identification and Material Safety Data clause of this contract will be labeled in accordance with one of the Acts in paragraphs (b)(1) through
(5) of this clause instead of the Hazard Communication Standard. Any hazardous material not listed will be interpreted to mean that a label is required in accordance with the Hazard Communication Standard.

MATERIAL (If None, Insert "None.")	ACT
_____	_____
_____	_____

(d) The apparently successful Offeror agrees to submit, before award, a copy of the hazard warning label for all hazardous materials not listed in paragraph (c) of this clause. The Offeror shall submit the label with the Material Safety Data Sheet being furnished under the Hazardous Material Identification and Material Safety Data clause of this contract.

(e) The Contractor shall also comply with MIL-STD-129, Marking for Shipment and Storage (including revisions adopted during the term of this contract).

(End of clause)

252.223-7004 DRUG-FREE WORK FORCE (SEP 1988)

(a) Definitions.

(1) "Employee in a sensitive position," as used in this clause, means an employee who has been granted access to classified information; or employees in other positions that the Contractor determines involve national security; health or safety, or functions other than the foregoing requiring a high degree of trust and confidence.

(2) "Illegal drugs," as used in this clause, means controlled substances included in Schedules I and II, as defined by section 802(6) of title 21 of the United States Code, the possession of which is unlawful under chapter 13 of that Title. The term "illegal drugs" does not mean the use of a controlled substance pursuant to a valid prescription or other uses authorized by law.

(b) The Contractor agrees to institute and maintain a program for achieving the objective of a drug-free work force. While this clause defines criteria for such a program, contractors are encouraged to implement alternative approaches comparable to the criteria in paragraph (c) that are designed to achieve the objectives of this clause.

(c) Contractor programs shall include the following, or appropriate alternatives:

(1) Employee assistance programs emphasizing high level direction, education, counseling, rehabilitation, and coordination with available community resources;

(2) Supervisory training to assist in identifying and addressing illegal drug use by Contractor employees;

(3) Provision for self-referrals as well as supervisory referrals to treatment with maximum respect for individual confidentiality consistent with safety and security issues;

(4) Provision for identifying illegal drug users, including testing on a controlled and carefully monitored basis. Employee drug testing programs shall be established taking account of the following:

(i) The Contractor shall establish a program that provides for testing for the use of illegal drugs by employees in sensitive positions. The extent of and criteria for such testing shall be determined by the Contractor based on considerations that include the nature of the work being performed under the contract, the employee's duties, and efficient use of Contractor resources, and the risks to health, safety, or national security that could result from the failure of an employee adequately to discharge his or her position.

(ii) In addition, the Contractor may establish a program for employee drug testing--

(A) When there is a reasonable suspicion that an employee uses illegal drugs; or

(B) When an employees has been involved in an accident or unsafe practice;

(C) As part of or as a follow-up to counseling or rehabilitation for illegal drug use;

(D) As part of a voluntary employee drug testing program.

(iii) The Contractor may establish a program to test applicants for employment for illegal drug use.

(iv) For the purpose of administering this clause, testing for illegal drugs may be limited to those substances for which testing is prescribed by section 2..1 of subpart B of the "Mandatory Guidelines for Federal Workplace Drug Testing Programs" (53 FR 11980 (April 11, 1988), issued by the Department of Health and Human Services.

(d) Contractors shall adopt appropriate personnel procedures to deal with employees who are found to be using drugs illegally. Contractors shall not allow any employee to remain on duty or perform in a sensitive position who is found to use illegal drugs until such times as the Contractor, in accordance with procedures established by the Contractor, determines that the employee may perform in such a position.

(e) The provisions of this clause pertaining to drug testing program shall not apply to the extent that are inconsistent with state or local law, or with an existing collective bargaining agreement; provided that with respect to the latter, the Contractor agrees those issues that are in conflict will be a subject of negotiation at the next collective bargaining session.

(End of clause)

252.223-7006 PROHIBITION ON STORAGE AND DISPOSAL OF TOXIC AND HAZARDOUS MATERIALS (APR 1993)

(a) "Definitions".

As used in this clause --

(1) "Storage" means a non-transitory, semi-permanent or permanent holding, placement, or leaving of material. It does not include a temporary accumulation of a limited quantity of a material used in or a waste generated or resulting from authorized activities, such as servicing, maintenance, or repair of Department of Defense (DoD) items, equipment, or facilities.

(2) "Toxic or hazardous materials" means:

(i) Materials referred to in section 101(14) of the Comprehensive Environmental Response, Compensation, and Liability Act (CERCLA) of 1980 (42 U.S.C. 9601(14)) and materials designated under section 102 of CERCLA (42 U.S.C. 9602) (40 CFR part 302);

(ii) Materials that are of an explosive, flammable, or pyrotechnic nature; or

(iii) Materials otherwise identified by the Secretary of Defense as specified in DoD regulations.

(b) In accordance with 10 U.S.C. 2692, the Contractor is prohibited from storing or disposing of non-DoD-owned toxic or hazardous materials on a DoD installation, except to the extent authorized by a statutory exception to 10 U.S.C. 2692 or as authorized by the Secretary of Defense or his designee.

(End of clause)

252.225-7031 SECONDARY ARAB BOYCOTT OF ISRAEL (JUN 1992)

(a) Definitions. As used in this clause--

(1) "Foreign person" means any person other than a United States person as defined in Section 16(2) of the Export Administration Act of 1979 (50 U.S.C. App. Sec 2415).

(2) "United States person" is defined in Section 16(2) of the Export Administration Act of 1979 and means any United States resident or national (other than an individual resident outside the United States and employed by other than a United States person), any domestic concern (including any permanent domestic establishment of any foreign concern), and any foreign subsidiary or affiliate (including any permanent foreign establishment) of any domestic concern which is controlled in fact by such domestic concerns, as determined under regulations of the President.

(b) Certification. By submitting this offer, the Offeror, if a foreign person, company or entity, certifies that it--

(1) Does not comply with the Secondary Arab Boycott of Israel; and

(2) Is not taking or knowingly agreeing to take any action, with respect to the Secondary Boycott of Israel by Arab countries, which 50 U.S.C. App. Sec 2407(a) prohibits a United States person from taking.

(End of clause)

252.227-7033 C RIGHTS IN SHOP DRAWINGS (APR 1966)

(a) Shop drawings for construction means drawings, submitted to the Government by the Construction Contractor, subcontractor or any lower-tier subcontractor pursuant to a construction contract, showing in detail (i) the proposed fabrication and assembly of structural elements and (ii) the installation (i.e., form, fit, and attachment details) of materials or equipment. The Government may duplicate, use, and disclose in any manner and for any purpose shop drawings delivered under this contract.

(b) This clause, including this paragraph (b), shall be included in all subcontracts hereunder at any tier.

252.231-7000 SUPPLEMENTAL COST PRINCIPLES (DEC 1991)

When the allowability of costs under this contract is determined in accordance with part 31 of the Federal Acquisition Regulation (FAR), allowability shall also be determined in accordance with part 231 of the Defense FAR Supplement, in effect on the date of this contract.

252.236-7000 MODIFICATION PROPOSALS - PRICE BREAKDOWN. (DEC 1991)

(a) The Contractor shall furnish a price breakdown, itemized as required and within the time specified by the Contracting Officer, with any proposal for a contract modification.

(b) The price breakdown --

(1) Must include sufficient detail to permit an analysis of profit, and of all costs for --

(i) Material;

(ii) Labor;

(iii) Equipment;

(iv) Subcontracts; and

(v) Overhead; and

(2) Must cover all work involved in the modification, whether the work was deleted, added, or changed.

(c) The Contractor shall provide similar price breakdowns to support any amounts claimed for subcontracts.

(d) The Contractor's proposal shall include a justification for any time extension proposed.

252.243-7001 PRICING OF CONTRACT MODIFICATIONS (DEC 1991)

When costs are a factor in any price adjustment under this contract, the contract cost principles and procedures in FAR part 31 and DFARS part 231, in effect on the date of this contract, apply.

252.243-7002 REQUESTS FOR EQUITABLE ADJUSTMENT (MAR 1998)

(a) The amount of any request for equitable adjustment to contract terms shall accurately reflect the contract adjustment for which the Contractor believes the Government is liable. The request shall include only costs for performing the change, and shall not include any costs that already have been reimbursed or that have been separately claimed. All indirect costs included in the request shall be properly allocable to the change in accordance with applicable acquisition regulations.

(b) In accordance with 10 U.S.C. 2410(a), any request for equitable adjustment to contract terms that exceeds the simplified acquisition threshold shall bear, at the time of submission, the following certificate executed by an individual authorized to certify the request on behalf of the Contractor:

I certify that the request is made in good faith, and that the supporting data are accurate and complete to the best of my knowledge and belief.

(Official's Name)

(Title)

(c) The certification in paragraph (b) of this clause requires full disclosure of all relevant facts, including--

(1) Cost or pricing data if required in accordance with subsection 15.403-4 of the Federal Acquisition Regulation (FAR); and

(2) Information other than cost or pricing data, in accordance with subsection 15.403-3 of the FAR, including actual cost data and data to support any estimated costs, even if cost or pricing data are not required.

(d) The certification requirement in paragraph (b) of this clause does not apply to----

(1) Requests for routine contract payments; for example, requests for payment for accepted supplies and services, routine vouchers under a cost-reimbursement type contract, or progress payment invoices; or

(2) Final adjustment under an incentive provision of the contract.

252.247-7023 TRANSPORTATION OF SUPPLIES BY SEA (MAR 2000)

(a) Definitions. As used in this clause --

(1) "Components" means articles, materials, and supplies incorporated directly into end products at any level of manufacture, fabrication, or assembly by the Contractor or any subcontractor.

(2) "Department of Defense" (DoD) means the Army, Navy, Air Force, Marine Corps, and defense agencies.

(3) "Foreign flag vessel" means any vessel that is not a U.S.-flag vessel.

(4) "Ocean transportation" means any transportation aboard a ship, vessel, boat, barge, or ferry through international waters.

(5) "Subcontractor" means a supplier, materialman, distributor, or vendor at any level below the prime contractor whose contractual obligation to perform results from, or is conditioned upon, award of the prime contract and who is performing any part of the work or other requirement of the prime contract.

(6) "Supplies" means all property, except land and interests in land, that is clearly identifiable for eventual use by or owned by the DoD at the time of transportation by sea.

(i) An item is clearly identifiable for eventual use by the DoD if, for example, the contract documentation contains a reference to a DoD contract number or a military destination.

(ii) "Supplies" includes (but is not limited to) public works; buildings and facilities; ships; floating equipment and vessels of every character, type, and description, with parts, subassemblies, accessories, and equipment; machine tools; material; equipment; stores of all kinds; end items; construction materials; and components of the foregoing.

(7) "U.S.-flag vessel" means a vessel of the United States or belonging to the United States, including any vessel registered or having national status under the laws of the United States.

(b)(1) The Contractor shall use U.S.-flag vessels when transporting any supplies by sea under this contract.

(2) A subcontractor transporting supplies by sea under this contract shall use U.S.-flag vessels if--

(i) This contract is a construction contract; or

(ii) The supplies being transported are--

(A) Noncommercial items; or

(B) Commercial items that--

(1) The Contractor is reselling or distributing to the Government without adding value (generally, the Contractor does not add value to items that it contracts for f.o.b. destination shipment);

(2) Are shipped in direct support of U.S. military contingency operations, exercises, or forces deployed in humanitarian or peacekeeping operations; or

(3) Are commissary or exchange cargoes transported outside of the Defense Transportation System in accordance with 10 U.S.C. 2643.

(c) The Contractor and its subcontractors may request that the Contracting Officer authorize shipment in foreign-flag vessels, or designate available U.S.-flag vessels, if the Contractor or a subcontractor believes that --

(1) U.S.-flag vessels are not available for timely shipment;

(2) The freight charges are inordinately excessive or unreasonable; or

(3) Freight charges are higher than charges to private persons for transportation of like goods.

(d) The Contractor must submit any request for use of other than U.S.-flag vessels in writing to the Contracting Officer at least 45 days prior to the sailing date necessary to meet its delivery schedules. The Contracting Officer will process requests submitted after such date(s) as expeditiously as possible, but the Contracting Officer's failure to grant approvals to meet the shipper's sailing date will not of itself constitute a compensable delay under this or any other clause of this contract. Requests shall contain at a minimum --

(1) Type, weight, and cube of cargo;

(2) Required shipping date;

(3) Special handling and discharge requirements;

(4) Loading and discharge points;

(5) Name of shipper and consignee;

(6) Prime contract number; and

(7) A documented description of efforts made to secure U.S.-flag vessels, including points of contact (with names and telephone numbers) with at least two U.S.-flag carriers contacted. Copies of telephone notes, telegraphic and facsimile message or letters will be sufficient for this purpose.

(e) The Contractor shall, within 30 days after each shipment covered by this clause, provide the Contracting Officer and the Division of National Cargo, Office of Market Development, Maritime Administration, U.S. Department of Transportation, Washington, DC 20590, one copy of the rated on board vessel operating carrier's ocean bill of lading, which shall contain the following information --

(1) Prime contract number;

(2) Name of vessel;

(3) Vessel flag of registry;

(4) Date of loading;

(5) Port of loading;

(6) Port of final discharge;

(7) Description of commodity;

(8) Gross weight in pounds and cubic feet if available;

(9) Total ocean freight in U.S. dollars; and

(10) Name of the steamship company.

(f) The Contractor agrees to provide with its final invoice under this contract a representation that to the best of its knowledge and belief --

(1) No ocean transportation was used in the performance of this contract;

(2) Ocean transportation was used and only U.S.-flag vessels were used for all ocean shipments under the contract;

(3) Ocean transportation was used, and the Contractor had the written consent of the Contracting Officer for all non-U.S.-flag ocean transportation; or

(4) Ocean transportation was used and some or all of the shipments were made on non-U.S.-flag vessels without the written consent of the Contracting Officer. The Contractor shall describe these shipments in the following format:

ITEM DESCRIPTION	CONTRACT LINE ITEMS	QUANTITY

TOTAL_____

(g) If the final invoice does not include the required representation, the Government will reject and return it to the Contractor as an improper invoice for the purposes of the Prompt Payment clause of this contract. In the event there has been unauthorized use of non-U.S.-flag vessels in the performance of this contract, the Contracting Officer is entitled to equitably adjust the contract, based on the unauthorized use.

(h) The Contractor shall include this clause, including this paragraph (h), in all subcontractors under this contract that--

(1) Exceed the simplified acquisition threshold in Part 2 of the Federal Acquisition Regulation; and

(2) Are for a type of supplies described in paragraph (b)(3) of this clause.

(End of clause)

252.247-7024 NOTIFICATION OF TRANSPORTATION OF SUPPLIES BY SEA (MAR 2000)

(a) The Contractor has indicated by the response to the solicitation provision, Representation of Extent of Transportation by Sea, that it did not anticipate transporting by sea any supplies. If, however, after the award of this contract, the Contractor learns that supplies, as defined in the Transportation of Supplies by Sea clause of this contract, will be transported by sea, the Contractor --

(1) Shall notify the Contracting Officer of that fact; and

(2) Hereby agrees to comply with all the terms and conditions of the Transportation of Supplies by Sea clause of this contract.

(b) The Contractor shall include this clause; including this paragraph (b), revised as necessary to reflect the relationship of the contracting parties--

(1) In all subcontracts under this contract, if this contract is a construction contract; or

(2) If this contract is not a construction contract, in all subcontracts under this contract that are for--

(i) Noncommercial items; or

(ii) Commercial items that--

(A) The Contractor is reselling or distributing to the Government without adding value (generally, the Contractor does not add value to items that it subcontracts for f.o.b. destination shipment);

(B) Are shipped in direct support of U.S. military contingency operations, exercises, or forces deployed in humanitarian or peacekeeping operations; or

(C) Are commissary or exchange cargoes transported outside of the Defense Transportation System in accordance with 10 U.S.C. 2643.

(End of clause)

S-36.29 MINIMUM/MAXIMUM CONTRACT VALUE (DEC 1993)

For each contract, the dollar value of the contracting during the base period is a stated minimum quantity of $96,000.00 with a potential dollar value estimated maximum of $4,800,000.00. A maximum of $4,800,000.00 will be awarded between the two (2) contracts during the base period based on competition between the two successful offerors. If the options are exercised, the stated minimum quantity and the estimated potential maximum amount for each option period are $50,000.000 and $5,000,000.00, respectively. A maximum of $5,000,000.00 will be awarded between the two (2) contracts based on competition between the two successful offerors during each option period.
The total not-to-exceed contract amount (base plus 2 options) is $14,800,000.00.

If the Government's requirements for services set forth in the solicitation do not result in orders in the amount described as "maximum", the event shall not constitute the basis for an equitable price adjustment under this contract.

[End of Statement]

TABLE OF CONTENTS
SECTION 00740
SAMPLE PROJECT FOR FIRM FIXED PRICE (FFP) PROPOSAL

	TITLE	PAGES
1.	SCOPE OF WORK FOR SAMPLE PROJECT TASK ORDER NO. 99-0001: REMEDIATE Library Extension, Solomon Elementary School, Schofield Barracks, Hawaii	00740-1 through 00740-3
2.	DRAWINGS FOR SAMPLE TASK ORDER NO. 00-0001	Attachments 1 through 3

SCOPE OF WORK
TASK ORDER NO. 99-0001

1. TITLE: Remediate Library Extension.

2. DESCRIPTION OF WORK:

General: Repair an 1800 sq. ft (40' x 45') room in the library Extension at Solomon Elementary School and repair the men and women's restrooms. Repairs shall include the following:

a. Repair damaged walls, windows and doors.
b. Repair bookshelves and cabinets.
c. Repair built up roofing.
d. Paint interior.
e. Re-carpet floor.
f. Replace Bathroom and bathroom fixtures. (Must meet ADA)
g. Replace tile Bathroom floors.
h. Replace Window AC Units with Split System AC.

3. APPLICABLE DAGS & CEGS SPECIFICATIONS:

Applicable specifications for this task order include, but not limited to:
DAGS

07510 Built-up Bituminous Roofing
08527 Aluminum Jalousie Windows
09512 Acoustical Tile
09650 Resilient Tile Floor
09680 Carpeting
09901 Repainting (Exterior/Interior)
09920 Repainting (Interior)
10240 Aluminum Security Screens
10670 Storage Shelving

CEGS

06200 Finish Carpentry
07840 Firestopping
08110 Steel Doors and Frames
08210 Wood Doors
08700 Builders’ Hardware
08810 Glass and Glazing
09250 Gypsum Wallboard
09915 Color Schedule
10160 Toilet Partitions
10800 Toilet Accessories
12320 Cabinets and Countertops
15080 Thermal Insulation for Mechanical Systems
15400 Plumbing, General Purpose
15653 Air Conditioning System (Unitary Type)
15895 Air Supply, Distribution, Ventilation and Exhaust Systems
15990 Testing, Adjusting and Balancing of HVAC Systems
16415 Electrical Work, Interior

4. DETAILED PROJECT REQUIREMENTS:

4A. Site:

Existing Site: Any area around the library disturbed by construction and new grading shall to be repaired to original condition.

Utilities: Water line currently located along south east side of building shall be relocated. See attachment 1 drawing for existing and proposed utilities.

4B. Architectural:

Roof: Resurface built-up roof. Slope of roof shall is 3 on l2. Roof, gutters and downspouts shall match existing.

Windows: Single hung, dark bronze, anodized aluminum windows. Glazing shall be single glaze with bronze tint. Windows shall match existing. Provide mini-blinds on all new windows to match existing. Security screens shall be provided.

Interior finishes: Paint interior to match existing color scheme. Carpet shall match existing. Walls shall have orange peel texture and be painted to match existing. A recessed fire extinguisher cabinet shall be provided. Bathroom shall consist of replacing all existing fixtures and must comply with American Disabilities Act.

4C. Structural:

Repair Roof: Repair wood rot, remove existing built up roofing and replace with new built up roofing.

Walls: Walls shall match existing exterior wall (CMU).

Connection to Existing Building. Expansion or control joints shall be checked and replaced as required along all interfaces with existing building.

4D. Mechanical:

HVAC: Replace existing window HVAC system with split system.

4E. Electrical:

Lighting: All lighting shall be type 206 or 207 (from Standard Dwg. No. 40-06-04, COE Lighting Fixtures Manual) recessed fluorescent fixtures. Lighting shall be rheostat controlled for dimming.

Power: Provide electrical outlets along interior wall every 10 feet. All receptacles shall be 120V, 15A minimum. Panel “MP” (120/208, 3 phase) located in existing mechanical room has sufficient space for all new addition electrical loads. The building transformer has sufficient capacity for all new additional electrical loads.

Fire Detection: check and repair if required.

Emergency Exit lights: Emergency Exit lights shall be provided above each door.

5. PERFORMANCE PERIOD: 150 calendar days

6. CONTRACTOR REQUIREMENTS:

[ ] FRP004 - SITE SURVEY
[ ] FRPOO5 - SITE SURVEY REPORT
[ ] FRP006 - FEASIBILITY STUDY
[X] FRPOO7 - WORK PLAN
[X] FRP008 - PRICE PROPOSAL
[X] FRP009 - PRE-REMEDIATION ACTION CONFERENCE
[X] FRP010 - WORK SCHEDULE
[X] FRP011 - WEEKLY PROGRESS REPORT
[ ] FRP012 - TELEPHONE CONVERSATION/CORRESPONDENCE LOG
[ ] FRP013 - SYSTEM/EQUIPMENT TESTING
[ ] FRP014 - OPERATING AND MAINTENANCE MANUAL
[ ] FRP015 - TRAINING
[X] FRP016 - EQUIPMENT AND CONSTRUCTION WARRANTIES
[ ] FRP017 - LIST OF STANDARD EQUIPMENT AND SERVICE ORGANIZATION
[ ] FRP018 - CERTIFICATION OF COMPUTER MEDIA
[ ] FRP019 - SITE SPECIFIC REMEDIATION REPORT
[ ] FRP020 - AS-BUILT/IN-PROGRESS DRAWINGS
[X] FRP021 - AS-BUILT/FINAL DRAWINGS
[ ] FRP022 - SURVEY LOG BOOKS AND SURVEY DRAWINGS

7. GOVERNMENT FURNISHED ITEMS: As-built drawings of existing facility.

8. PHASING REQUIREMETNS: The room will be turned over to the contractor until completed.

9. LIQUIDATED DAMAGES: Per Contract

10. ATTACHMENTS: This SOW includes the following Attachments 1 and 2:

1) Concept Roof Plan
2) Concept Floor Plan

END OF SCOPE OF WORK

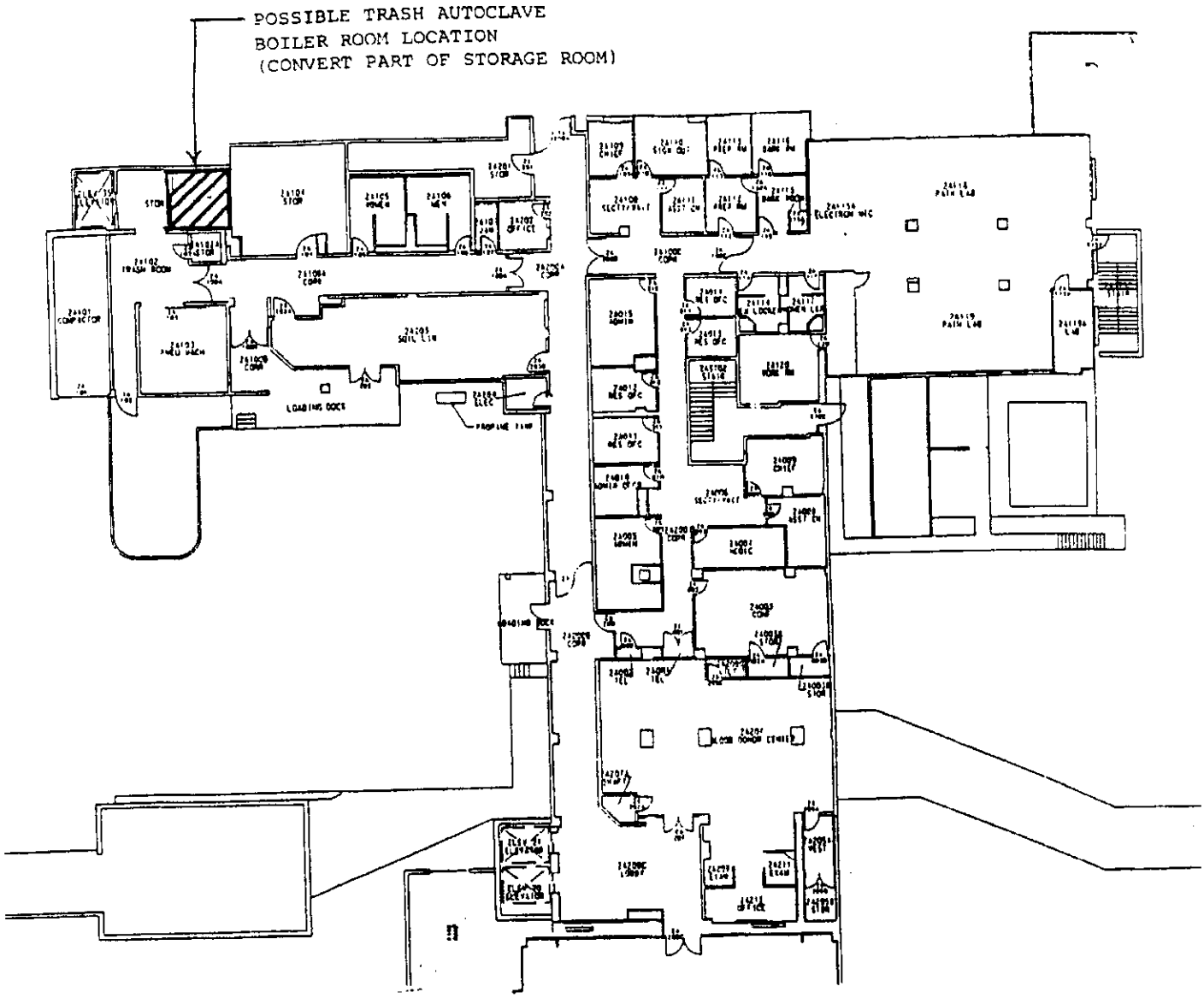

WING A - LEVEL 2

1"=30'-0"

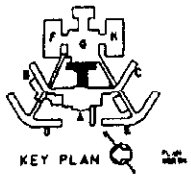

ATTACHMENT 1

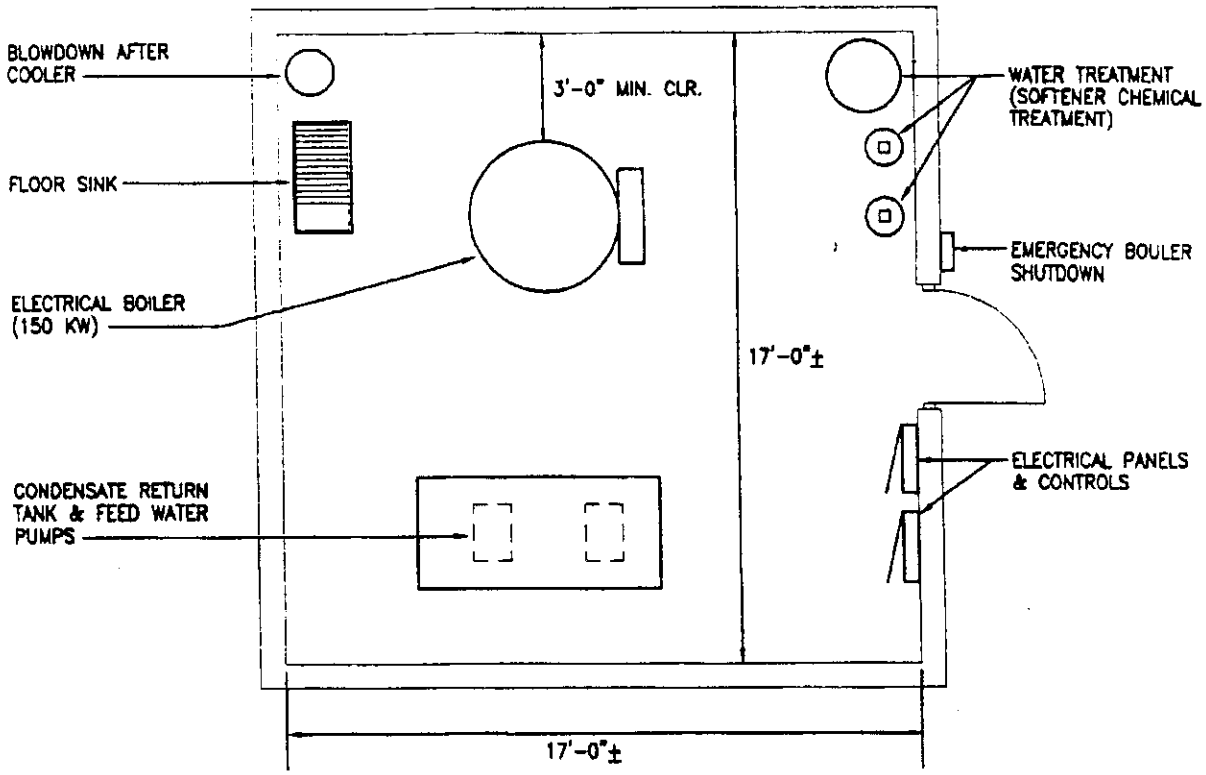

TYPICAL ELECTRICAL BOILER ROOM LAYOUT

SCALE: 1/4" = 1'-0"

ATTACHMENT 2

SECTION 00800 Special Contract Requirements

CLAUSES INCORPORATED BY FULL TEXT

52.211-10 COMMENCEMENT, PROSECUTION, AND COMPLETION OF WORK (APR 1984)

The Contractor shall be required to (a) commence work; (b) prosecute the work diligently, and (c) complete the entire work ready for use not later than the performance time mutually agreed upon per task order. The time stated for completion shall include final cleanup of the premises.

(End of clause)

52.211-12 LIQUIDATED DAMAGES--CONSTRUCTION (APR 1984)

(a) If the Contractor fails to complete the work within the time specified in the contract, or any extension, the Contractor shall pay to the Government as liquidated damages, the sum of $286.00 for each day of delay.

(b) If the Government terminates the Contractor's right to proceed, the resulting damage will consist of liquidated damages until such reasonable time as may be required for final completion of the work together with any increased costs occasioned the Government in completing the work.

(c) If the Government does not terminate the Contractor's right to proceed, the resulting damage will consist of liquidated damages until the work is completed or accepted.

(End of clause)

52.231-5000 EQUIPMENT OWNERSHIP AND OPERATING EXPENSE SCHEDULE
MAR 1995)--EFARS

(a) This clause does not apply to terminations. See 52.249-5000, Basis for Settlement of Proposals and FAR Part 49.

(b) Allowable cost for construction and marine plant and equipment in sound workable condition owned or controlled and furnished by a contractor or subcontractor at any tier shall be based on actual cost data for each piece of equipment or groups of similar serial and series for which the Government can determine both ownership and operating costs from the contractor's accounting records. When both ownership and operating costs cannot be determined for any piece of equipment or groups of similar serial or series equipment from the contractor's accounting records, costs for that equipment shall be based upon the applicable provisions of EP 1110-1-8, Construction Equipment Ownership and Operating Expense Schedule, Region X. Working conditions shall be considered to be average for determining equipment rates using the schedule unless specified otherwise by the contracting officer. For equipment not included in the schedule, rates for comparable pieces of equipment may be used or a rate may be developed using the formula provided in the schedule. For forward pricing, the schedule in effect at the time of negotiations shall apply. For retroactive pricing, the schedule in effect at the time the work was performed shall apply.

(c) Equipment rental costs are allowable, subject to the provisions of FAR 31.105(d)(ii) and FAR 31.205-36. Rates for equipment rented from an organization under common control, lease-purchase arrangements, and sale-leaseback arrangements, will be determined using the schedule, except that actual rates will be used for equipment leased from an organization under common control that has an established practice of leasing the same or similar equipment to unaffiliated lessees.

(d) When actual equipment costs are proposed and the total amount of the pricing action exceeds the small purchase threshold, the contracting officer shall request the contractor to submit either certified cost or

pricing data, or partial/limited data, as appropriate. The data shall be submitted on Standard Form 1411, Contract Pricing Proposal Cover Sheet.

(End of clause)

52.236-1 PERFORMANCE OF WORK BY THE CONTRACTOR (APR 1984)

The Contractor shall perform on the site, and with its own organization, work equivalent to at least twenty-five percent (25%) of the total amount of work to be performed under the contract. This percentage may be reduced by a supplemental agreement to this contract if, during performing the work, the Contractor requests a reduction and the Contracting Officer determines that the reduction would be to the advantage of the Government.

52.236-4 PHYSICAL DATA (APR 1984)

Data and information furnished or referred to below is for the Contractor's information. The Government shall not be responsible for any interpretation of or conclusion drawn from the data or information by the Contractor.

(a) The indications of physical conditions on the drawings and in the specifications are the result of site investigations.

(b) Weather conditions: Tropical. Data on temperature and rainfall may be obtained from the National Weather Service in Honolulu.

(c) Transportation facilities: The contractor shall make his own investigation of the condition and availability of public and private roads as well as clearances, restrictions, and load limits of bridges.

(d) Security Requirements. The Contractor shall comply with the industrial security requirements of the Army. Contractor personnel requiring access to the military installation in connection with the contract may be subject to security investigation and shall be admitted to only those parts of the installation or building(s) where their presence is required. While on the job, Contractor employees shall display identification as may be required under the Special Contract Requirements paragraph 'Identification of Employees.' Vehicles operating on the military installation are subject to search by security personnel at any time. Immediately upon receipt of notice to proceed, the Contractor shall furnish to the Contracting Officer the following:

(i) A roster of all employees who will need access to the military installation in connection with the contract. The roster shall be submitted in three copies. If requested in writing by the Contracting Officer, additional personnel data shall also be furnished.

(ii) A list of automotive vehicles which will be used on the military installation in connection with the contract. The list shall include make, year, license number, details of insurance coverage required by the Special Contract Requirements paragraph 'Required Insurance,' and expiration date of safety inspection decal. The list of automotive vehicles shall be submitted in four copies. The Contractor shall be responsible for vehicle permits issued to him and its subcontractors. When so authorized by the Contracting Officer, the Contractor may coordinate directly with the military police concerning permits for contractor-owned vehicles. Privately-owned vehicles used by Contractor personnel must be registered with the military police by the individual owners.

(End of clause)

(R 7-603.25 1965 JAN)

52.236-17 LAYOUT OF WORK (APR 1984)

The Contractor shall lay out its work from Government established base lines and bench marks indicated on the drawings, and shall be responsible for all measurements in connection with the layout. The Contractor shall furnish, at its own expense, all stakes, templates, platforms, equipment, tools, materials, and labor required to lay out any part of the work. The Contractor shall be responsible for executing the work to the lines and grades that may be established or indicated by the Contracting Officer. The Contractor shall also be responsible for maintaining and preserving all stakes and other marks established by the Contracting Officer until authorized to remove them. If such marks are destroyed by the Contractor or through its negligence before their removal is authorized, the Contracting Officer may replace them and deduct the expense of the replacement from any amounts due or to become due to the Contractor.

52.249-5000 BASIS FOR SETTLEMENT OF PROPOSALS

Actual costs will be used to determine equipment costs for a settlement proposal submitted on the total cost basis under FAR 49.206-2(b). In evaluating a terminations settlement proposal using the total cost basis, the following principles will be applied to determine allowable equipment costs:

(1) Actual costs for each piece of equipment, or groups of similar serial or series equipment, need not be available in the contractor's accounting records to determine total actual equipment costs.

(2) If equipment costs have been allocated to a contract using predetermined rates , those charges will be adjusted to actual costs.

(3) Recorded job costs adjusted for unallowable expenses will be used to determine equipment operating expenses.

(4) Ownership costs (depreciation) will be determined using the contractor's depreciation schedule (subject to the provisions of FAR 31.205-11).

(5) License, taxes, storage and insurance costs are normally recovered as an indirect expense and unless the contractor charges these costs directly to contracts, they will be recovered through the indirect expense rate.

(End of Clause)

52.253-1 COMPUTER GENERATED FORMS (JAN 1991)

(a) Any data required to be submitted on a Standard or Optional Form prescribed by the Federal Acquisition Regulation (FAR) may be submitted on a computer generated version of the form, provided there is no change to the name, content, or sequence of the data elements on the form, and provided the form carries the Standard or Optional Form number and edition date.

(b) Unless prohibited by agency regulations, any data required to be submitted on an agency unique form prescribed by an agency supplement to the FAR may be submitted on a computer generated version of the form provided there is no change to the name, content, or sequence of the data elements on the form and provided the form carries the agency form number and edition date.

(c) If the Contractor submits a computer generated version of a form that is different than the required form, then the rights and obligations of the parties will be determined based on the content of the required form.

S-8 UTILITY OUTAGES

Utility outages shall be as hereinafter specified, unless otherwise indicated or specified. Interruptions to existing utilities shall be held to a minimum. Outages to facilitate connections to existing systems shall be scheduled to take place during periods of minimum demand. The Contractor shall submit a planned schedule of outages to the Contracting Officer for proper coordination with existing facilities, and shall notify the Contracting Officer in writing (to be designated within each task order) in advance of the intended interruptions. Planned schedule of outages shall include specific dates, times, and anticipated duration of proposed outages. In the event the proposed outages interfere with station operations, the Contracting Officer will consider or offer alternate dates and/or times. Outages may be permitted during off-peak hours, hours of darkness, weekends, and holidays, at no additional cost to the Government. Work shall be planned to minimize outages. No utility outage will be permitted until the Contractor receives written approval from the Contracting Officer.

[End of Statement]

S-14 PRICE ADJUSTMENT FOR CONTINGENT SCOPE OF WORK

As of the time this contract is awarded, the Government is uncertain as to presence of asbestos in the buildings or any other structures to be worked on by the Contractor. Upon discovering presence of asbestos in any part of the structures, the Contractor shall notify the Government thereof as soon as practicable. Upon becoming aware of presence of asbestos in any part of the structures through the contractor's notice or otherwise, the Government shall modify the contract for asbestos abatement and make an equitable adjustment to the contract price as called under the contract clause entitled Changes.

[End of Statement]

S-17 ASBESTOS --- (OCCUPATIONAL HEALTH AND ENVIRONMENTAL)

The Government is uncertain on the presence of asbestos at the time of award. The following paragraphs only apply if asbestos is discovered during the performance of the work. Refer to paragraph entitled PRICE ADJUSTMENT FOR CONTINGENT SCOPE OF WORK in Section 00800 for procedural information upon discovery of asbestos.

(a) THE CONTRACTOR IS WARNED THAT EXPOSURE TO AIRBORNE ASBESTOS HAS BEEN ASSOCIATED WITH FOUR DISEASES: LUNG CANCER, CERTAIN GASTROINTESTINAL CANCERS, PLEURAL OR PERITONEAL MESOTHELIOMA AND ASBESTOSIS. Studies indicate there are significantly increased health dangers to persons exposed to asbestos who smoke and further, to family members and other persons who become indirectly exposed as a result of the exposed worker bringing asbestos-laden work clothing home to be laundered.

(b) The Contractor is advised that friable and/or nonfriable asbestos containing material has been identified in area(s) where contract work is to be performed. Friable asbestos containing material means any material that contains more than 1 percent asbestos by weight that hand pressure can crumble, pulverize or reduce to powder when dry. Nonfriable asbestos containing materials do not release asbestos fiber during routine

handling and end-use. However, excessive fiber concentrations may be produced during uncontrolled abrading, sanding, drilling, cutting, machining, removal, demolition or other similar activities.

(c) Care must be taken to avoid releasing, or causing to be released, asbestos fibers into the atmosphere where they may be inhaled or ingested. The Occupational Safety and Health Administration (OSHA) has set standards at 29 CFR 1910.1001, for exposure to airborne concentrations of asbestos, fibers, methods of compliance, medical surveillance, housekeeping procedures and other measures that must be taken when working with or around asbestos containing materials which release airborne asbestos fibers at concentrations in excess of those established 29 CFR 1910.1001. 29 CFR 1910.1001 has been identified as applicable to construction (29 CFR 1926.55 gases, vapors, fumes, dusts and mists). The Environmental Protection Agency (EPA) has established standards at 40 CFR 61.140-156 for the control of asbestos emissions to the environment and the handling and disposal of asbestos wastes.

(d) When contract work activities are carried out in locations where the potential exists for exposure to airborne asbestos fibers as described in paragraph (b), or where asbestos waste will be generated, the Contractor shall assure that all measures necessary to provide effective protection to persons from exposure to asbestos fibers (and prevention of contamination to property, materials, supplies, equipment and the internal and external environment) are effectively instituted.

(e) As a minimum, the Contractor shall comply with the provisions of 29 CFR 1910.1001 and 1926.55; 49 CFR 72.101, 172.200-204, 172.316, 173.1090; 40 CFR 61.140-156; and any state implementing hazardous waste under the Resources Conservation and Recovery Act (RCRA) requirements and any other applicable federal, state or local requirements.

(f) In addition to the information required in Contract Clause, ACCIDENT PREVENTION, of this contract, the Contractor's Accident Prevention Plan must also fully address the following topics, and at the Contractor's option may include additional information as applicable.

(1) Medical Surveillance: (29 CFR 1910.1001(J)).

(2) Employee training: Prior to beginning work in asbestos containing material area(s) (29 CFR 1910.1001 and 29 CFR 1910.134).

(3) Respiratory protection: (29 CFR 1910.1001 and 29 CFR 1910.134)

(4) Personal protective clothing and equipment: (29 CFR 1910.1001(d)). The use of compressed air to remove asbestos from workers' clothing is prohibited. The Contractor shall specify the type of change room, wash facilities and laundering facilities as applicable.

(5) Airborne asbestos monitoring: 29 CFR 1910.1001(f)). Specify the monitoring and analytical procedures to be used before, during, and after completion of contract work in areas where asbestos containing materials are located. All asbestos monitoring shall be conducted under the guidance of an industrial hygienist certified by the American Board of Industrial Hygiene. Samples shall be analyzed by an American Industrial Hygiene Association (AIHA) accredited laboratory proficient in the analysis of asbestos and asbestos containing materials. Turn around time from end of sampling period to review of results of analyses by Contractor shall be no longer than 72 hours.

(6) Housekeeping: (29 CFR 1910.1001(h)). Dry sweeping of contract work areas contaminated with asbestos containing material is prohibited. The Contractor shall specify methods and materials used to package asbestos containing waste and plan to control any incidental airborne release or spill of asbestos containing material.

(7) Methods of compliance: (29 CFR 1910.1001(c)). Contractor shall include procedures relating to engineering controls, local exhaust ventilation, particular tools to be used and work practices (1910.1001(c)). Specify methods, materials and equipment to be used to prevent asbestos contamination to property, materials, supplies, equipment and the internal and external environment during maintenance,

renovation or other contract activities. Local Exhaust ventilation equipment including power operated tools equipped with local exhaust ventilation shall conform with the Standard Fundamentals Governing the Design and Operation of Local Exhaust Systems ANSI Z9.2 latest revised edition. Describe the type of high-efficiency filtered (HEPA) vacuum cleaners that shall be used to vacuum asbestos containing materials. Describe methods and materials to be used to assure all asbestos containing material will be thoroughly wetted by use of a wetting agent and water before removal and that airborne asbestos dust will be kept to a minimum.

(8) Methods and materials to be used to decontaminate any property, materials, supplies, equipment and the environment if asbestos contamination results. (29 CFR 1910.1001(c)).

(9) Recordkeeping procedures. (29 CFR 1910.1001(i) and 1910.20).

(10) Specific description of packaging, marking and shipping conveyances to be used to transport asbestos containing waste from the generation point to a storage or disposal facility in compliance with Department of Transportation requirements. (49 CFR 172.101, 172.200-204, 176,316, 173.1090).

(11) Emergency procedures that would be taken if an accident of spill of asbestos containing material occurs during the transport of asbestos containing waste. (40 CFR 61.20-25).

(12) Methods and equipment used to off load and bury asbestos containing waste control airborne emissions at the burial site. (40 CFR 61.20-25).

(g) The Contractor shall complete and return to the Contracting Officer within 15 working days after the completion of all airborne asbestos monitoring conducted under this contract, a 'Summarization of Airborne Asbestos Sampling Results' form (ENG Form 4921-R, Jan 86) provided by the Government. NOTE: This completed summarization form is to be used by the US Army Corps of Engineers for statistical information purposes and does not relieve the Contractor from his recordkeeping requirements as described in 29 CFR 1910.1001(i) and 1910.20.

[End of Statement]

S-19 SAFETY STANDARDS

The successful offeror will be required to comply with Chapter 396 of the Hawaii Occupational Safety and Health Act (OSHA) standards and Title 12 Department of Labor and Industrial Relations, Subtitle 8 Division of Occupational Safety and Health, Part 2 General Industry Standards as well as with the Corps of Engineers Manual 385-1-1, Safety and Health Requirements Manual. [Title 29, CFR, Chap 18, Part 1910 (OSHA)]

[End of Statement]

S-24 KEY PERSONNEL AND SUBCONTRACTORS

a. The Contractor shall request approval from the Contracting Officer at least thirty (30) days prior to making any changes in key personnel. Key personnel are defined as follows:

(1) Personnel identified in the proposal to the basic contract as key individuals to be assigned for participation in the performance of the contract.
(2) Individuals which are designated as key personnel by agreement of the Government and the Contractor during negotiations of the basic contract.

b. The Contractor shall request approval from the Ordering Officer or Contracting Officer for changes to subcontractors specifically identified in the proposal to the basic contract. The request for change may be provided through letter or task order proposal submission. The Ordering Officer or Contracting Officer may approve the change in subcontractor through letter or award of the task order. Subcontractors are defined as follows:

(1) Subcontractors specifically identified in the proposal to the basic contract for participation in the performance of the contract.
(2) Subcontractors designated by agreement of the Government and the Contractor during negotiations of the basic contract.

c. The Contractor must submit adequate information that demonstrates that the qualifications of prospective personnel and/or subcontractor are equal to or better than the qualifications of the personnel and/or subcontractor being replaced. If the subcontractor was identified as a specific type of small business concern (i.e,. small business, small disadvantaged business, women owned small business, or HUBZone small business concern, etc.) for evaluation purposes, a similar type of small business concern must be used as a replacement subcontractor, unless authorized by the Ordering Officer or the Contracting Officer.

[End of Statement]

S-25 AWARD OF TASK ORDERS UNDER MULTIPLE AWARD CONTRACTS

a. More than one contract is being awarded for the same construction/services required under this contract. Each Contractor shall be afforded a fair opportunity to be considered for each task order in excess of $2,500 unless one of the conditions in paragraph c. below applies.

b. The government will provide all awardees a fair opportunity for consideration. In accordance with FAR 16.505(b), the Government will consider the following factors when determining which Contractor will be awarded the task order - the importance of these factors will vary depending upon the services to be performed:

(1) Past performance on earlier tasks under the multiple award contract;
(2) Quality of deliverables;
(3) Cost control;
(4) Price;
(5) Cost, or
(6) Other factors that the contracting officer believes are relevant.

c. In accordance with FAR 16.505(b)(2), awardees need not be given an opportunity to be considered for a particular order in excess of $2,500.00 under multiple delivery order contracts or multiple task order contracts if the Contracting Officer determines that -

(1) The agency need for such supplies or services is such urgency that providing such opportunity would result in unacceptable delays;

(2) Only one such awardee is capable of providing such services required at the level of quality required because the services ordered are unique or highly specialized;

(3) The order should be issued on a sole-source basis in the interest of economy and efficiency as a logical follow-on to a task order already issued under this contract, provided that all multi-awardees were given fair opportunity to be considered for the original order; or

(4) It is necessary to place an order to satisfy a minimum guarantee.

d. If the contractor believes it was not fairly considered for a particular task order, the contractor may present the matter to the contracting officer. The contractor may appeal the explanation or decision of the contracting officer to the U.S. Army Corps of Engineers (USACE) Ombudsman, who is the USACE Principal Assistant Responsible for Contracting (PARC), at the following address:

Headquarters
U.S. Army Corps of Engineers
ATTN: CEPR-P (USACE Ombudsman)
20 Massachusetts Avenue N.W.
Washington, D.C. 20314-1000

The ombudsman will review the contractor's complaint, and in coordination with the contracting officer, ensure that the contractor was afforded a fair opportunity to be considered for task order.

[End of Statement]

S-26 Small Business Program Support Requirements

a. The proposal submitted in response to the Sub-subfactor IV entitled, Small Business Program Support, is incorporated into Section 00010 of the contract at time of award.

b. The contractor is required to make a good faith effort in comp lying with the targets identified in their proposal. The contractor shall notify and obtain approval from the contracting officer or his appointed representative of any substitutions of subcontractors that were specifically identified in the proposal.

c. The Contractor must submit the following reports to the Contracting Officer or his representative on a quarterly basis. The Contracting Officer will provide the date for submission of the report. Additional sheets providing information about the subcontracts awarded during the period must be attached to the reports.

(1) Optional Form 312, Small Disadvantaged Business Participation Report (Attachment 1, Section 00800) or in the Contractor's own format providing the same information, shall be used to report on participation of SDB concerns. See FAR 52.219-25, Small Disadvantaged Business Participation Program--Disadvantaged Status and Reporting, in Section 00700 for additional information.

(2) Contractor shall provide a report on participation of small business concerns which consist of small business (SB) concerns, women owned small business concerns and historically black colleges and universities and minority institutions. The report shall show the dollars obligated and the percentage of total contract amount for each group.

[End of Statement]

S-28.7 REQUIRED INSURANCE (Dec 1993)

(The following is applicable when work is performed on a government installation.)

The minimum insurance requirements, pursuant to Section 00700, Contract Clause, "INSURANCE - - WORK ON A GOVERNMENT INSTALLATION" of this contract, are:

Workers' Compensation and Employer's Liability Insurance - Minimum coverage of $100,000.

Comprehensive General Liability Insurance - Minimum coverage of $500,000 per occurrence.

Automobile Liability Insurance

(1) Bodily Injury: Minimum coverage of $200,000 per person and $500,000 per occurrence.

(2) Property Damage: Minimum coverage of $20,000 per occurrence.

The Contractor shall insert the substance of this clause in subcontracts under this contract that require work on a Government installation. The Certificate Holder for Subcontractors' Certificates of Insurance shall be the U.S. Army Engineer District, Honolulu, Fort Shafter, Hawaii 96858-5440. [FAR 28.306 and 28.307-2]

[End of Statement]

~~**S-28.8 PERFORMANCE AND PAYMENT BONDS (OCT 1995)**~~

~~**(Applicable to contracts exceeding $100,000)**~~

~~**Within fourteen (14) calendar days after the date of contract award, the bidder to whom award is made shall furnish the Government with two bonds, each with good and sufficient surety or sureties acceptable to the Government; namely, a Performance Bond (Standard Form 25) and a Payment Bond (Standard Form 25-A).**~~

~~**Any bonds furnished will be furnished by the Contractor to the Government prior to issuance of a Notice to Proceed by the Government. [FAR 28.102-3]**~~

~~**[End of Statement]**~~

S-28.10 PERFORMANCE AND PAYMENT BONDS FOR TASK ORDERS EXCEEDING $100,000 (APR 2000)

(Applicable to Task Orders exceeding $100,000)

Following the award of each Task Order, the Contractor to whom award is made, shall furnish the Government with two bonds; namely a Performance Bond (Standard Form 25) and a Payment Bond (Standard Form 25-A), within fourteen (14) calendar days. Each bond shall be presented with good and sufficient surety or sureties acceptable to the Government.

The Contractor shall furnish the Performance and Payment Bonds to the Government prior to the issuance of a Notice to Proceed by the Government. [FAR 28.102-3]

[End of Statement]

S-28.11 PAYMENT BONDS FOR TASK ORDERS BELOW $100,000 (APR 2000)

(Applicable to Task Orders below $100,000)

Within fourteen (14) days following the award of each Task Order, the Contractor shall furnish the Government with a Payment Bond (Standard Form 25-A), with good and sufficient surety or sureties acceptable to the Government.

The Contractor shall furnish the Payment Bond to the Government prior to the issuance of a Notice to Proceed by the Government. [FAR 28.102-3]

[End of Statement]

S-36.5 TIME EXTENSIONS FOR UNUSUALLY SEVERE WEATHER

1. This provision specifies the procedure for determination of time extensions for unusually severe weather in accordance with the contract clause entitled DEFAULT (FIXED-PRICE CONSTRUCTION). In order for the Contracting Officer to award a time extension under this clause, the following conditions must be satisfied:

a. The weather experienced at the project site during the contract period must be found to be unusually severe, that is, more severe than the adverse weather anticipated for the project location during any given month.

b. The unusually severe weather must actually cause a delay to the completion of the project. The delay must be beyond the control and without the fault or negligence of the Contractor.

2. The following schedule of monthly anticipated adverse weather delays is based on National Oceanic and Atmospheric Administration (NOAA) or similar data for the project location and will constitute the base line for monthly weather time evaluations. The Contractor's progress schedule must reflect these anticipated adverse weather delays in all weather dependent activities.

MONTHLY ANTICIPATED ADVERSE WEATHER DELAY
WORK DAYS BASED ON 5 DAY WORK WEEK

JAN	FEB	MAR	APR	MAY	JUN	JUL	AUG	SEP	OCT	NOV	DEC
3	3	2	1	1	0	1	1	1	2	2	3

3. Upon acknowledgment of the Notice to Proceed (NTP) and continuing throughout the contract, the Contractor will record on the daily CQC report, the occurrence of adverse weather and resultant impact to normally scheduled work. Actual adverse weather delay days must prevent work on critical activities for 50 percent or more of the Contractor's scheduled work day. The number of actual adverse weather delay days shall include days impacted by actual adverse weather (even if adverse weather occurred in previous month), be calculated chronologically from the first to the last day of each month, and be recorded as full days. If the number of actual adverse weather delay days exceeds the number of days anticipated in paragraph 2, above, the Contracting Officer will convert any qualifying delays to calendar days, giving full consideration for equivalent fair weather work days, and issue a modification in accordance with the contract clause entitled DEFAULT (FIXED-PRICE CONSTRUCTION).
[ER 415-1-15, 31 Oct 89]

S-36.6 CERTIFICATES OF COMPLIANCE

Any certificates required for demonstrating proof of compliance of materials with specification requirements shall be executed in five (5) copies. Each certificate shall be signed by an official authorized to certify in behalf of the manufacturing company and shall contain the name and address of the Contractor, the project name and location, and the quantity and date or dates of shipment or delivery to which the certificates apply. Copies of laboratory test reports submitted with certificates shall contain the name and address of the testing laboratory and the date or dates of the tests to which the report applies. Certification shall not be construed as relieving the Contractor from furnishing satisfactory material, if after tests are performed on selected samples, the material is found not to meet the specific requirements.

[End of Statement]

S-36.7 IDENTIFICATION OF EMPLOYEES

The Contractor shall be responsible for furnishing to each employee and for requiring each employee engaged on the work to display such identification as may be approved and directed by the Contracting Officer. All prescribed identification shall immediately be delivered to the Contracting Officer for cancellation upon the release of any employee. When required by the Contracting Officer, the Contractor shall obtain and submit fingerprints of all persons employed or to be employed on the project.

[End of Statement]

S-36.8 GROUND-FAULT CIRCUIT INTERRUPTERS

Ground-fault circuit interrupters for all 125-volt single phase 15- and 20-ampere receptacle outlets which are not part of the permanent wiring of the building or structure shall be provided by the Contractor in accordance with Section 305-6 of the 1999 National Electrical Code.

[End of Statement]

S-36.9 AS-BUILT DRAWINGS (OCT 1999)

The Contractor shall keep on the job site two complete sets of drawings. These drawings will be identified as working 'As-Built' drawings and shall be used to record all changes from the original drawings and specifications, the exact 'As-Built' locations, sizes and types of equipment, etc. These working 'As-Built' drawings shall be corrected daily and the quality of draftsmanship shall be compatible with the draftsmanship of the original drawings.

The working As-Built drawings will be reviewed monthly by the Contracting Officer's Representative (COR) to assure satisfactory performance in maintaining an accurate and current recording of as-built conditions. Failure to maintain an accurate and current recording of as-built conditions, as determined by the COR, shall be cause for appropriate action by the Contracting Officer, including withholding a part of contract payment until such time as the deficiencies have been corrected.

At the final inspection or upon beneficial occupancy of the facility by the user, whichever comes first, the Contractor shall provide one of the two sets of working As-Built drawings to the COR for turnover with the facility. The Contractor shall continue to maintain the remaining set of working As-Built drawings until such time the COR expects no more additional changes and or modifications to the project. Contractor shall obtain a copy of the CADD files from the COR. Within 20 calendar days of receipt of a request by the COR, the Contractor shall submit to the Contracting Officer one (1) full set of CADD files in Microstation 95 or later version format on CD-ROM. The contractor modifications to the CADD files shall be completed with native Microstation 95 or later version vector graphic Commands. The as-built drawings shall be a record of the construction as installed and completed by the Contractor. They shall include all the information shown on the contract set of drawings and a record of all deviations, modifications, or changes from those drawings, however minor, which were incorporated in the work, all additional work not appearing on the contract drawings, and all changes which are made after final inspection of the contract work.

In the event the Contractor accomplishes additional work which changes the as-built conditions of the facility after submission of the as-built drawings, the Contractor shall furnish revised and/or additional drawings as required to depict as-built conditions. The requirements for these additional drawings will be the same as for the as-built drawings included in the original submission.

[End of Statement]

S-36.10 WARRANTY IMPLEMENTATION (MARCH 2000)

(a) The Contractor shall designate a representative within the State of Hawaii to implement the Warranty of Construction clause. The Contractor may designate himself provided he has a permanent office in the State of Hawaii. The Contractor may designate different representatives for separate specialties of work.

(b) The name, address, telephone number of each representative, and nomenclature of warranty item shall be submitted to the Contracting Officer's representative at least 30 days prior to the contract completion date or beneficial occupancy of the work or part thereof. For the purposes of paragraph f of the warranty clause, a reasonable time shall be considered to be as follows:

(1) 21 calendar days from the receipt of a written notification of any failure, defect, or damage of such nature that the work remains functional or habitable or both, as applicable.

(2) 24 hours for failures, defects or damages which render the work nonfunctional or uninhabitable or both, as applicable. Response in this instance starts from receipt of verbal notification from an authorized Government representative. Written confirmation will follow the initial verbal request.

[End of Statement]

S-36.11 POSTERS AND NOTICES

Wage Rate, Equal Employment Opportunity, and Nondiscrimination in Employment Posters and Notices will be provided to the Contractor by the Contracting Officer. The Contractor shall mount these posters and notices, together with the wage determination decision, under weatherproof, transparent, protective covering, in one or more conspicuous places, as approved, and readily available to employees.

[End of Statement]

S-36.17 EQUIPMENT OWNERSHIP AND OPERATING EXPENSE SCHEDULE (AUG 1999)

Whenever a contract or modification of contract price is negotiated, the Contractor's cost proposals for equipment ownership and operating expenses shall be determined in accordance with the requirements of Special Contract Requirements statement, entitled "EQUIPMENT OWNERSHIP AND OPERATING EXPENSE SCHEDULE," of this solicitation. EP 1110-1-8 "Construction Equipment Ownership and Operating Expense Schedule" is available at http://www.usace.army.mil/inet/usace-docs/eng-pamphlets/ep1110-1-8(vol10)/toc.htm for State of Hawaii (Region 10) and at http://www.usace.army.mil/inet/usace-docs/eng-pamphlets/ep1110-1-8(vol12)/toc.htm for Kwajalein Island, Roi-Namur Island, and Meck Island (Area 12), including Guam, American Samoa, and Johnston Island). [FAR 31.105(d)(2)(i) and EFARS 31.105(d)(2)(i)(b)].

[End of Statement]

S-36.18 ACCIDENT PREVENTION PLAN (DEC 1998)

Within 15 days after receipt of Notice of Award of the contract, and at least 7 days prior to the preconstruction conference, four copies of the Accident Prevention Program shall be submitted to the Contracting Officer for review and acceptance. The program shall consist of the following forms and documents:

(a) An executed POD Form 248-R Rev (1 Jun 98), Accident Prevention Program, Administrative Plan.

(b) An executed POD Form 184-R Rev (16 Oct 98), Activity Hazard Analysis. (At the Contracting Officer's discretion, the Contractor may submit its Activity Hazard Analysis only for the first phase of construction provided that it is accompanied by an outline of the remaining phases of construction. All remaining phases shall be submitted and accepted prior to the beginning of work in each phase.)

(c) A copy of company policy statement of accident prevention and any other guidance statements normally provided new employees.

Contractor shall not commence physical work at the site until the program has been accepted by the Contracting Officer, or his authorized representative. In developing and implementing its Accident Prevention Program, the Contractor is also responsible for reviewing Section 1 of the most current edition (Sep 1996) of US Army Corps of Engineers Safety and Health Requirements Manual, Engineer Manual 385-1-1. [See paragraph entitled, SAFETY STANDARDS, in Section 00800]

[End of Statement]

S-36.19 PROGRESS CHARTS

If the Government revises the work to be accomplished by issuing a Notice to Proceed with a change to the contract which would affect the order of work or duration of time for completing the work, the progress chart prepared by the Contractor pursuant to the Contract Clause entitled 'SCHEDULE FOR CONSTRUCTION CONTRACTS' shall be revised promptly by the Contractor by adding to, deleting, or rescheduling the affected features to indicate the Contractor's current plans for completing the work as revised. The cost for this revision of the schedule is a part of the cost of the change. Revisions to the progress charts shall be made no later than the next regular progress updating following notice to proceed with the change, whether or not the formal modification to the contract has been issued. If the Contractor fails or refuses to incorporate the changed work in the progress chart, the Contracting Officer may furnish revisions which the Contractor shall include and use in the progress chart until the modification is settled or until actual dates supersede the estimated data. If the Contractor objects to the changes furnished by the Contracting Officer, it shall submit such objections in writing along with a counterplan within 20 days after the date suggested revisions were furnished by the Contracting Officer. Failure to submit objections and counterplan within the 20 days will be deemed to indicate the Contractor's concurrence in the Contracting Officer's suggested revisions. The schedule into which these revisions have been incorporated shall become the current schedule for continued evaluation of progress and the document which will be used to evaluate impact on the Contractor's work for time extensions.

[End of Statement]

S-36.20 PERFORMANCE OF WORK BY THE CONTRACTOR - DEFINED (NOV 1998)

(a) "Work," means physical work activities, involving any of the trades required to directly place the construction required by the contract. It also includes physical activities that directly support the work, such as: (1) warehousing; (2) maintenance of equipment; (3) procurement and transportation of supplies or construction materials to the site for use by the contractor; (4) procuring, transporting and providing equipment for use by the contractor; (5) logistical activities that directly support the contractor's employees; and (6) similar activities. The meaning of the term does not include: (1) physical work performed by subcontractors; (2) procurement and transportation of supplies or construction materials to the site for use by subcontractors; (3) procuring, transporting and providing equipment for use by subcontractors; logistical activities undertaken by subcontractors for the benefit of contractor or subcontractor employees; (4) superintendence, quality control, clerical or similar activities; or (5) other activities of a similar nature.

Work will be quantified in terms of its monetary cost to the contractor, and will be compared to the total direct costs that the contractor incurs in performing the contract.

(b) "On the site" means the area within the construction limits depicted or described in the contract drawings or specifications. Activities such as transportation, maintenance and logistics that take place outside of the construction limits depicted or described are still "on the site," if in direct support of activities within the construction limits.

(c) "The contractor's own organization" means those individuals who are employed and paid by the contractor, whether full or part time. If a joint venture or partnership, members (and their paid employees) of the joint venture or partners are considered part of "the contractor's own organization." If a corporation, wholly-owned subsidiary elements of the corporation and their paid employees, are considered part of "the contractor's own organization." Any individual who is employed or paid, even on a occasional basis by an entity other than the contractor (such as a subcontractor), or any subcontractor or supplier to the contractor, is not considered part of "the contractor's own organization."

[End of Statement]

S-36.21 AVAILABILITY AND USE OF UTILITY SERVICES (APR 1984)

(a) The Government shall make all reasonably required amounts of utilities available to the Contractor from existing outlets and supplies, as specified in the contract. Unless otherwise provided in the contract, the amount of each utility service consumed shall be charged to or paid for by the Contractor at prevailing rates charged to the Government or, where the utility is produced by the Government, at reasonable rates determined by the Contracting Officer. The Contractor shall carefully conserve any utilities furnished without charge.

(b) The Contractor, at its expense and in a workmanlike manner satisfactory to the Contracting Officer, shall install and maintain all necessary temporary connections and distribution lines, and all meters required to measure the amount of each utility used for the purpose of determining charges. Before final acceptance of the work by the Government, the Contractor shall remove all the temporary connections, distribution lines, meters, and associated paraphernalia.

(c) Schedule of utilities available from the Government without charge: To be given to Contractor at the beginning of each task order.

[End of Statement]

S-36.25 CONTRACT DRAWINGS, MAPS, AND SPECIFICATIONS (MAR 1998)

(a) The Government will provide the Contractor, without charge, one set of contract drawings and specifications in electronic format on a compact disk. It is the Contractor's responsibility to reproduce a set of contract drawings and specifications from this compact disk. The Government will not give the Contractor any hard copy paper drawings or specifications for any contract resulting from this solicitation.

(b) The Contractor shall--

(1) Check all drawings furnished immediately upon receipt;
(2) Compare all drawings and verify the figures before laying out the work;
(3) Promptly notify the Contracting Officer of any discrepancies; and
(4) Be responsible for any errors which might have been avoided by complying with this paragraph (b).

(c) Large scale drawings shall, in general, govern small scale drawings. Figures marked on drawings shall, in general, be followed in preference to scale measurements.

(d) Omissions from the drawings or specifications or the misdescription of details of work which are manifestly necessary to carry out the intent of the drawings and specifications, or which are customarily performed, shall not relieve the Contractor from performing such omitted or misdescribed details of the work, but shall be performed as if fully and correctly set forth and described in the drawings and specifications.

(e) The work shall conform to the specifications and the contract drawings identified on the following index of drawings:

Title File and Drawing No.
(SEE ATTACHED LIST OF DRAWINGS)

[End of Statement]

S-36.26 YEAR 2000 COMPLIANCE - CONSTRUCTION CONTRACTS (AUG 1998)

1. Definitions:

(a) "Information technology" means any equipment, or interconnected system(s) or subsystem(s) of equipment, that is used in the automatic acquisition, storage, manipulation, management, movement, control, display, switching, interchange, transmission, or reception of data or information by the agency. The term "information technology" includes hardware (e.g., computers, microprocessors, ancillary equipment), software, firmware, and related resources.

(b) "Embedded system" means any device, equipment or system that includes information technology (i.e., microprocessor chip) as an integral part of the operation of the equipment. "Embedded system" is also referred to as "microprocessor-based equipment". Examples of "embedded system" include, but are not limited to, HVAC system, energy control system, fire detection and control system, utility monitoring and control systems, intrusion detection system, emergency generators, uninterruptable power supplies, telecommunications switches, leak detection systems, automated sprinkler system, etc. Refer to Appendix, entitled "Examples of Embedded Systems" at the back of Section 00800, Special Contract Requirements, for additional examples.

(c) "Year 2000 compliant" means information technology accurately processes date/time data (including, but not limited to, calculating, comparing, and sequencing) from, into, and between the twentieth and twenty-first centuries, and the years 1999 and 2000 and leap year calculations. Furthermore, Year 2000 compliant information technology when used in combination with other information technology shall accurately process date/time data if the other information technology properly exchanges date/time data with it.

2. In accordance with FAR 39.106, the contractor shall ensure that with respect to any design, construction, supplies, or services, as well as any subsequent task/delivery orders issued under this contract (if applicable), all information technology contained therein, including information technology in embedded systems, shall be Year 2000 compliant. Specifically, the contractor shall:

a. Perform, maintain, and provide an inventory of all major components to include structures, equipment, items, parts, and furnishing under this contract and each task/delivery order which may be affected by the Year 2000 compliance requirement.

b. Indicate whether each component is currently Year 2000 compliant or requires an upgrade for compliance prior to government acceptance.

c. Additional content of the inventory and submittal information is provided in Section 01600, YEAR 2000 COMPLIANCE.

[End of Statement]

~~S-25 AWARD OF TASK ORDERS UNDER MULTIPLE AWARD CONTRACTS~~

~~a. More than one contract is being awarded for the same construction/services required under this contract. Each Contractor shall be afforded a fair opportunity to be considered for each task order in excess of $2,500 unless one of the conditions in paragraph c. below applies.~~

~~b. The government will provide all awardees a fair opportunity for consideration. In accordance with FAR 16.505(b), the Government will consider the following factors when determining which Contractor will be awarded the task order - the importance of these factors will vary depending upon the services to be performed:~~

~~(1) Past performance on earlier tasks under the multiple award contract;~~
~~(2) Quality of deliverables;~~
~~(3) Cost control;~~
~~(4) Price;~~
~~(5) Cost, or~~
~~(6) Other factors that the contracting officer believes are relevant.~~

~~c. In accordance with FAR 16.505(b)(2), awardees need not be given an opportunity to be considered for a particular order in excess of $2,500.00 under multiple delivery order contracts or multiple task order contracts if the Contracting Officer determines that -~~

~~(1) The agency need for such supplies or services is such urgency that providing such opportunity would result in unacceptable delays;~~

~~(2) Only one such awardee is capable of providing such services required at the level of quality required because the services ordered are unique or highly specialized;~~

~~**(3) The order should be issued on a sole-source basis in the interest of economy and efficiency as a logical follow-on to a task order already issued under this contract, provided that all multi-awardees were given fair opportunity to be considered for the original order; or**~~

~~**(4) It is necessary to place an order to satisfy a minimum guarantee.**~~

~~**d. If the contractor believes it was not fairly considered for a particular task order, the contractor may present the matter to the contracting officer. The contractor may appeal the explanation or decision of the contracting officer to the U.S. Army Corps of Engineers (USACE) Ombudsman, who is the USACE Principal Assistant Responsible for Contracting (PARC), at the following address:**~~

~~**Headquarters**~~
~~**U.S. Army Corps of Engineers**~~
~~**ATTN: CEPR-P (USACE Ombudsman)**~~
~~**20 Massachusetts Avenue N.W.**~~
~~**Washington, D.C. 20314-1000**~~

~~**The ombudsman will review the contractor's complaint, and in coordination with the contracting officer, ensure that the contractor was afforded a fair opportunity to be considered for task order.**~~

~~**[End of Statement]**~~

TABLE OF CONTENTS
TECHNICAL SPECIFICATIONS DIVISION 1

SECTION NO.	TITLE
01000	DESCRIPTION/SPECS/WORK STATEMENT
01010	WORK PLAN REQUIREMENTS
01045	ALTERATIONS TO EXISTING BUILDING(S)
01090	SOURCES FOR REFERENCE PUBLICATION
01200	PROJECT MEETINGS
01320	PROJECT SCHEDULES
01330	SUBMITTAL PROCEDURES
01335	SURVEY, LAYOUT, AND OTHER DATA
01356	STORM WATER POLLUTION PREVENTION MEASURES
01410	ENVIRONMENT PROTECTION
01451	CONTRACTOR QUALITY CONTROL
01500	TEMPORARY CONSTRUCTION FACILITIES
01700	CONTRACT CLOSEOUT
01900	MISCELLANEOUS PROVISIONS

SECTION 01010

WORK PLAN REQUIREMENTS

1. SUBMISSION OF TASK ORDER DRAWINGS, SPECIFICATIONS, AND OTHER DATA

1.1 Number of Copies

The Contractor shall submit, in accordance with Sections 00720 CONTRACT DATA REQUIREMENTS LIST, 00800 SPECIAL CONTRACT REQUIREMENTS, and 01000 DESCRIPTION/SPECS/WORK STATEMENT, the required number of copies of the construction drawings, specifications, calculations, equipment schedules, and all other submittal data for each review submittal. These submittals shall be in accordance with the requirements of this solicitation, all current revisions, the applicable task order, and all other terms and conditions of the contract. Upon final approval, the Contractor shall within 7 calendar days furnish the required number of copies (including one reproducible) of the approved drawings, specifications, calculations, and other data.

1.2 Task Order Drawings

Task order drawings shall be prepared on CADD. Size of drawings shall be (30 inches by 42 inches). Provide (1/2 inch) of border trim along all four edges.

1.2.1 Computer Aided Design and Drafting (CADD) Systems

Task order construction drawings, and as-built (record) drawings after the completion of each task order, shall be submitted on diskettes in electronic file format compatible with Intergraph microstation along with the hard copies of the drawings, technical specifications, calculations, and other data. Furnish one set of the CADD drawings on 87.5 = (3 1/2-inch) floppy disks, compatible with Intergraph microstation (DGN files).

1.3 Task order Documents

Task order documents shall include construction drawings, specifications, Storm Water Pollution Prevention Plan if the project site is 20,230 square meters (5 acres) in size or larger, cost estimates, and calculations for categories such as, but not limited to, architectural, structural, mechanical, electrical, grading, drainage, paving, and outside utility services. Specifications shall be in sufficient detail to fully describe and demonstrate the quality of materials, the installation and performance of equipment, and the quality of workmanship. Specifications shall conform to the Construction Specifications Institute (CSI) 16-Division, 3-Part format and shall utilize Corps of Engineers Guide Specs (CEGS) and Honolulu Engineer District (HED) guide specifications, to the extent available, on the list of guide specifications at the end of this section. Detailing and installation of all equipment and materials shall comply with the manufacturers' recommendations.

1.4 Task Order Reviews

Task order development reviews shall be held at the Honolulu District Office at the preliminary (50 percent) and final (100 percent) completion stages in accordance with the task order schedule. The Government shall have 14 days review period for each submittal (50 percent development and 100 percent development) and seven (7) days review period for resubmittal of the 100 percent documents incorporating final review comments. Review conferences) between the Contractor and the Government may be held after submittal of the 50 percent and 100 percent stages if the Government determines them necessary.

1.4.1 **Material required for 50 percent submittal**

a. Drawings

All drawings required for completion of the task order, developed to approximately 50 percent completion.

b. Specifications

Draft of specifications for task work, including index and manufacturers' catalog and engineering data.

c. Interior and Exterior Finish Samples

For each applicable task order, furnish color/finish board(s) with attached samples of all exterior and interior appearance related construction items the Contractor proposes to furnish, including, but not limited to, such items as interior paints and finishes; wall covering; trim items; carpet; floor, wall and ceiling tiles; doors; plastic laminates for cabinet work, signage, etc. Each sample shall indicate color, texture, and finish; and, if patterned, shall be large enough to define full pattern. Samples shall be identified as to type of material, area of installation, manufacturer, and transmittal number under which certification of the material represented has been submitted in accordance with the requirements of Section 01330 SUBMITTAL PROCEDURES. Samples shall be mounted on 215 mm by 280 mm by 1.5 mm (8-1/2 inch by 11 inch by 1/16 inch thick) mat board, and shall be contained in three (3) ring binders. Epoxy glue, hot-melt glue, or contact cement shall be used to attach samples; Scotch tape, double-backed tape, or rubber cement is not acceptable. Cover of binders shall contain title of contract, contract number, task order number, and name of Contractor.

d. Calculations

Calculations developed to the extent required to support the task order development of that portion of utility distribution, structural, electrical, and mechanical systems included in this submittal.

e. Storm Water Pollution Prevention Plan (SWPPP)

For project sites that are 5 acres in size or larger, a detailed Storm Water Pollution Prevention Plan (SWPPP) shall be developed in compliance with the requirements for a NPDES General Permit for Storm Water Discharges from Construction Sites, as published in the Federal Register, Volume 57, Number 175, September 9, 1992. Minimum requirements for preparing a SWPPP are located in Section 01565 STORM WATER POLLUTION PREVENTION MEASURES. The Contractor shall identify whether or not a temporary sediment basin will be required during construction to comply with the regulation. If determined to be required a design of the basin will be included as part of the SWPPP and contract drawings. The SWPPP and a completed but unsigned Notice of Intent (NOI) shall be submitted for approval to the Corps of Engineers, Honolulu District, as part of this review package, accompanied by a signed Contractor's Certification. Upon approval, the District will file the Notice of Intent with the Environmental Protection Agency and notify the Contractor that it has been sent. Construction shall not be started earlier than 48 hours after the date the NOI was sent to the EPA. In addition, the Contractor shall post a copy of the NOI and a brief project description on the project bulletin board. For the project description, the Contractor may use Section 1.1 of the SWPPP or write a brief description.]

1.4.2 **Material required for 100 Percent submittal**

a. Drawings

All drawings submitted for the 50 percent review, upgraded to 100 percent completion. Include, as applicable:

(1) Transverse and longitudinal sections (1:50 (1/4", = 1'-0")).

(2) Large scale site plans (1:400 or 1:600 (1" = 30' or 50')) showing locations of sediment basins, diversion ditches, and other erosion control structures, indicating the approximate drainage areas each will serve. Indicate the materials, construction and capacity of each structure. Site plans shall include the following:

(a) Establishment of turf plan shall be prepared at a scale of 1:400 or 1:600 (1" = 30' or 50'). The plan shall indicate the limit of seeded areas and the types of turfing treatment specified.

(b) Landscape plan shall be prepared at a scale of 1:400 or 1:600 (1" = 30' or 50') and show the following:

1. A north arrow, graphic scale and legend.

2. Existing trees that are to be protected and saved.

3. Location of new trees, shrubs, and vines.

4. Plant list that includes botanical name, common name, height, caliper or spread, balled and burlapped or container, and ball and container size.

5. Planting and staking details.

6. All trees shall be furnished balled and burlapped and standard shrubs shall be furnished balled and burlapped or 15 to 19 liter (4 or 5 gallon) cans, dwarf shrubs shall be furnished in 7 liter (2 gallon) cans.

(3) Structural Drawings

Structural drawings shall include plans, details, and connections applicable to the task order.

(4) Mechanical and Electrical Drawings

Mechanical/electrical drawings, with complete schematics, shall show all heating, air conditioning, plumbing and electrical work.

b. Specifications

Specifications for all task order work upgraded to 100 percent completion. Contractor shall make final proposal of all materials and finishes at this submittal.

c. Calculations

Complete calculations for utility distribution systems, structural elements, and electrical and mechanical systems. Include computations for sizing equipment, air duct arrangement, and R-values for ceilings, roofs and exterior walls and floors. Include codes, manuals, and criteria used for calculations. Include, as applicable:

(1) loads, load factors, and allowances for future loads,

(2) energy performance calculations,

(3) working stresses and factors of safety,

(4) deflection calculations,

(5) Expansion-, contraction-, and crack-control measures,

(6) Foundation characteristics,

(7) Construction or erection limitations, and

(8) Fire Protection: Comprehensive analysis of all fire-safety factors with indication of treatment provided for each potential hazard.

d. Equipment Schedule

Based on the results of calculations, provide a complete list of the materials and equipment proposed for heating, air conditioning and plumbing, with the manufacturer's published cataloged product installation specifications and roughing-in data. The heating and air conditioning equipment data shall include the manufacturer's wiring diagrams, installation specifications, ARI certification, and the standard warranty for the equipment. In addition, provide the manufacturer's published cataloged capacities for supply diffusers as evidence that the arrangement of supply air outlets in each room will provide the throw and spread characteristics required to cover completely all exterior wall surfaces with the blanket of warm air at the proper design velocities.

1.4.3 **Review Location**

Review documents shall be sent, in the quantity indicated to the address listed below. The documents will be in their then present "on-board" status. All documents shall contain an index of contents.

Contracting Officer
US Army Engineer District, Honolulu
ATTN: CEPOH-CT-C
Fort Shafter, Hawaii 96858-5440

1.4.4 **Additional Review Time**

If for any reason the Government requires more time than that stated for review, then the Contractor will be granted an extension of time equal to the number of calendar days of delay.

1.5 **Conference and Post-Conference Action**

For each task order, Government personnel will present review comments for discussion and resolution. Copies of comments, annotated with comment action agreed on, will be made available to all parties before the conference adjourns. Unresolved problems will be resolved by immediate follow-on action at the end of conferences. Valid comments will be incorporated. On receipt of final corrected work plan documents, the Government will review them and, if they are complete and acceptable, will direct the Contractor to provide a cost proposal. The Government, however, reserves the right to disapprove work plan document submittals if comments are of too great a significance. In this case, every effort shall be made during follow-up action between the Contractor and the Government to resolve conflicts and problems such that documents can be fully approved. However, if final submittals are incomplete or deficient, requiring correction by the Contractor and resubmittal for review, the cost of rehandling and reviewing will be deducted from payment due the Contractor at the rate of $500.00 per submittal.

2. GUIDE SPECIFICATIONS

The following list of guide specifications generally represents the type of maintenance/minor construction work that will be required by the task orders, and shall be used for the Contractor's task order technical specifications. These guides will be furnished to the Contractor on a Compact Diskette (CD) in .PDF format at the Pre-Construction Conference. If work requires the use of guide specifications that are not listed here, a more complete listing will be furnished the Contractor upon request.

DIVISION 02 - SITE WORK

02080	ASBESTOS REMOVAL AND DISPOSAL
02090	REMOVAL AND DISPOSAL OF LEAD-CONTAINING PAINT
02091	REMOVAL AND DISPOSAL OF SUBSTRATES WITH LEAD-CONTAINING PAINT
02092	EXPOSURE ASSESSMENT FOR WORKERS EXPOSED TO LEAD-CONTAINING PAINT
02220	DEMOLITION
02221	EXCAVATION, FILLING AND BACKFILLING FOR BUILDINGS
02316	EXCAVATION, TRENCHING, AND BACKFILLING FOR UTILITIES SYSTEMS
02466	DRILLED FOUNDATION CAISSONS (PIERS)
02510	WATER DISTRIBUTION SYSTEM
02522	GROUND-WATER MONITORING WELLS
02531	SANITARY SEWERS
02551	BITUMINOUS PAVING FOR ROADS, STREETS AND OPEN STORAGE AREAS
02556	ASPHALTIC BITUMINOUS HEAVY-DUTY PAVEMENT (CENTRAL-PLANT HOT MIX)
02580	PAVEMENT MARKINGS
02685	GAS DISTRIBUTION SYSTEM
02711	PORTLAND CEMENT-STABILIZED BASE OR SUBBASE COURSE
02712	LIME-STABILIZED BASE COURSE, SUBBASE, OR SUBGRADE
02720	STORM-DRAINAGE SYSTEM
02721	SUBBASE COURSES
02722	GRADED, CRUSHED AGGREGATE BASE COURSE
02732	FORCE MAINS AND INVERTED SIPHONS; SEWER
02748	BITUMINOUS TACK AND PRIME COATS
02753	CONCRETE PAVEMENT FOR AIRFIELDS AND OTHER HEAVY-DUTY PAVEMENTS
02761	FUEL-RESISTANT SEALING
02770	CONCRETE SIDEWALKS AND CURBS AND GUTTERS
02811	UNDERGROUND SPRINKLER SYSTEMS
02831	CHAIN LINK FENCE
02921	SEEDING
02922	SODDING
02923	SPRIGGING
02930	EXTERIOR PLANTING
02951	RUNWAY RUBBER REMOVAL
02975	SEALING OF CRACKS IN BITUMINOUS PAVEMENTS

DIVISION 03 - CONCRETE

03150	EXPANSION JOINTS, CONTRACTION JOINTS, AND WATERSTOPS
03200	CONCRETE REINFORCEMENT
03300	CAST-IN-PLACE STRUCTURAL CONCRETE

DIVISION 04 - MASONRY

04200	MASONRY

DIVISION 05 - METALS

05055	WELDING, STRUCTURAL

05120 STRUCTURAL STEEL
05210 STEEL JOISTS
05300 STEEL DECKING
05500 MISCELLANEOUS METAL

DIVISION 06 - WOODS & PLASTICS

06100 ROUGH CARPENTRY
06200 FINISH CARPENTRY

DIVISION 07 - THERMAL & MOISTURE PROTECTION

07240 EXTERIOR INSULATION AND FINISH SYSTEM (EIFS)
07310 SLATE ROOFING
07311 ROOFING, STRIP SHINGLES
07320 CLAY TILE ROOFING
07412 NON-STRUCTURAL METAL ROOFING
07413 METAL SIDING
07416 STRUCTURAL STANDING SEAM METAL ROOF (SSSMR) SYSTEM
07510 BUILT-UP ROOFING
07600 SHEET METALWORK, GENERAL
07720 ROOF VENTILATORS, GRAVITY-TYPE
07840 FIRESTOPPING
07900 JOINT SEALING

DIVISION 08 - DOORS & WINDOWS

08110 STEEL DOORS AND FRAMES
08120 ALUMINUM DOORS AND FRAMES
08210 WOOD DOORS
08330 OVERHEAD ROLLING DOORS
08360 SECTIONAL OVERHEAD DOORS
08390 BLAST RESISTANT DOORS
08520 ALUMINUM WINDOWS
08700 BUILDERS' HARDWARE
08810 GLASS AND GLAZING

DIVISION 09 - FINISHES

09250 GYPSUM WALLBOARD
09310 CERAMIC TILE
09510 ACOUSTICAL CEILINGS
09650 RESILIENT FLOORING
09680 CARPET
09840 ACOUSTICAL WALL TREATMENT
09900 PAINTING, GENERAL
09915 COLOR SCHEDULE

DIVISION 10 - SPECIALTIES

10160 TOILET PARTITIONS
10260 WALL AND CORNER PROTECTION
10270 RAISED FLOOR SYSTEM
10440 INTERIOR SIGNAGE
10800 TOILET ACCESSORIES

DIVISION 11 - EQUIPMENT

11311 PARALLEL PLATE (OR VERTICALTUBE), GRAVITY OIL/WATER SEPARATOR

DIVISION 12 - FURNISHINGS

12320 CABINETS AND COUNTERTOPS
12335 CASEWORK FOR MEDICAL AND DENTAL FACILITIES
12490 WINDOW TREATMENT
12705 PREWIRED WORKSTATIONS

DIVISION 13 - SPECIAL CONSTRUCTION

13080 SEISMIC PROTECTION FOR MECHANICAL, ELECTRICAL EQUIPMENT
13110 CATHODIC PROTECTION SYSTEM (SACRIFICIAL ANODE)
13112 CATHODIC PROTECTION SYSTEM (IMPRESSED CURRENT)
13120 STANDARD METAL BUILDING SYSTEMS
13280 ASBESTOS ABATEMENT
13852 FIRE ALARM REPORTING SYSTEM, RADIO TYPE
13920 FIRE PUMPS
13930 WET PIPE SPRINKLER SYSTEM, FIRE PROTECTION
13935 DRY PIPE SPRINKLER SYSTEM, FIRE PROTECTION
13945 PREACTION AND DELUGE SPRINKLER SYSTEMS, FIRE PROTECTION
13955 AQUEOUS FILM-FORMING FOAM (AFFF) FIRE PROTECTION SYSTEM

DIVISION 14 - CONVEYING SYSTEMS

14210 ELEVATORS, ELECTRIC
14601 CRANES, BRIDGE & GANTRY, TOP RUNNING, 30-TON MAXIMUM CAPACITY
14630 OVERHEAD ELECTRIC CRANES

DIVISION 15 - MECHANICAL

15052 WELDING PRESSURE PIPING
15080 THERMAL INSULATION FOR MECHANICAL SYSTEMS
15400 PLUMBING, GENERAL PURPOSE
15556 FORCED HOT WATER HEATING SYSTEMS USING WATER AND STEAM HEAT EXCHANGERS
15565 HEATING SYSTEM; GAS-FIRED HEATERS
15566 WARM AIR HEATING SYSTEMS
15569 WATER AND STEAM HEATING; OIL, GAS OR BOTH; UP TO 20 MBTUH
15650 CENTRAL REFRIGERATED AIR-CONDITIONING SYSTEM
15653 AIR-CONDITIONING SYSTEM (UNITARY TYPE)
15895 AIR SUPPLY, DISTRIBUTION, VENTILATION, AND EXHAUST SYSTEM
15950 HEATING, VENTILATING AND AIR CONDITIONING (HVAC) CONTROL SYSTEMS
15990 TESTING, ADJUSTING, AND BALANCING OF HVAC SYSTEMS
15995 COMMISSIONING OF HVAC SYSTEMS

DIVISION 16 - ELECTRICAL

16263 DIESEL-GENERATOR SET STATIONARY 100-2500 KW, WITH AUXILIARIES
16370 ELECTRICAL DISTRIBUTION SYSTEM, AERIAL
16375 ELECTRICAL DISTRIBUTION SYSTEM, UNDERGROUND
16415 ELECTRICAL WORK, INTERIOR
16710 PREMISES DISTRIBUTION SYSTEM

-- End of Project Table of Contents --