SUBMITTAL REGISTER
(ER 415 1-10)

CONTRACT NO.

ND LOCATION
) MCA PN 46902 Ph 2A1, WBR Renal, SB

CONTRACTOR

SPECIFICATION SECTION
15650

TRANS-MITTAL NO. b.	ITEM NO c.	SPECIFICATION PARAGRAPH NUMBER d.	DESCRIPTION OF ITEM SUBMITTED e.	TYPE OF SUBMITTAL: DATA f.	DRAWINGS g.	INSTRUCTIONS h.	SCHEDULES i.	STATEMENTS j.	REPORTS k.	CERTIFICATES l.	SAMPLES m.	RECORDS n.	O&M MANUALS o.	CLASSIFICATION: INFORMATION ONLY p.	GOVERNMENT APPROVED q.	REVIEWER r.	CONTRACTOR SCHEDULE DATES: SUBMIT s.	APPROVAL NEEDED BY t.	MATERIAL NEEDED BY u.	CONTRACTOR ACTION: CODE v.	DATE w.	SUBMIT TO GOVERN-MENT x.	GOVERNMENT ACTION: CODE y.	DATE z.	REMARKS aa.
		1.3	Central Refrigerated Air-Conditioning	X										X											
			System																						
		2.9	Water Treatment Systems	X										X											
		1.3	Spare Parts	X										X											
		1.4	Qualifications	X										X											
		1.3	Central Refrigerated Air-Conditioning		X									X											
			System																						
		1.3	Posted Instructions			X								X											
		2.12	Factory Tests				X							X											
		3.2	Tests				X							X											
		3.6	Demonstrations				X							X											
		1.7.1	Verification of Dimensions					X						X											
		2.12	Factory Tests						X					X											
		3.2.1	Field Tests						X					X											
		3.2.2	System Performance Tests						X					X											
		3.2.3	Condenser Water Quality Tests						X					X											
		3.3	Inspections						X					X											
		1.3	Central Refrigerated Air-Conditioning							X				X											
			System																						
		1.3	Operation Manual										X	X											
		1.3	Maintenance Manual										X	X											
		1.3	Water Treatment System										X	X											

SECTION TABLE OF CONTENTS

DIVISION 01 - GENERAL REQUIREMENTS

SECTION 01430

ENVIRONMENTAL PROTECTION

PART 1 GENERAL

1.1 REFERENCES
1.2 GENERAL REQUIREMENTS
1.2.1 Subcontractors
1.2.2 Notification
1.3 SUBMITTALS

PART 2 PRODUCTS (NOT APPLICABLE)

PART 3 EXECUTION

3.1 PROTECTION OF ENVIRONMENTAL RESOURCES
3.1.1 Land Resources
3.1.1.1 Work Area Limits
3.1.1.2 Protection of Landscape
3.1.1.3 Reduction of Exposure of Unprotected Erodible Soils
3.1.1.4 Protection of Disturbed Areas
3.1.1.5 Contractor Facilities and Work Areas
3.1.2 Disposal of Wastes
3.1.2.1 Solid Wastes
3.1.2.2 Chemical Wastes:
3.1.2.3 Hazardous Wastes:
3.1.3 Historical, Archeological, and Cultural Resources
3.1.4 Water Resources
3.1.4.1 Monitoring of Water Areas:
3.1.5 Fish and Wildlife Resources
3.1.6 Air Resources
3.1.6.1 Particulates
3.1.6.2 Hydrocarbons and Carbon Monoxide
3.1.6.3 Odors
3.1.6.4 Monitoring of Air Quality
3.1.7 Sound Intrusions
3.2 POST CONSTRUCTION CLEANUP
3.3 RESTORATION OF LANDSCAPE DAMAGE
3.4 MAINTENANCE OF POLLUTION CONTROL FACILITIES
3.5 TRAINING OF CONTRACTOR PERSONNEL IN POLLUTION CONTROL

-- End of Section Table of Contents --

SECTION 01430

ENVIRONMENTAL PROTECTION

PART 1 GENERAL

1.1 REFERENCES

The publications listed below form a part of this specification to the extent referenced. The publications are referred to in the text by basic designation only.

STATE OF HAWAII DEPARTMENT OF HEALTH (HIDOH)

HIDOH, Chapter 46	Administrative Rules, Title 11, Community Noise Control
HIDOH, Chapter 59	Administrative Rules, Ambient Air Quality Standards
HIDOH, Chapter 60.1	Administrative Rules, Air Pollution Control

1.2 GENERAL REQUIREMENTS

This section covers prevention of environmental pollution and damage as the result of construction operations under this contract and for those measures set forth in the TECHNICAL REQUIREMENTS. For the purpose of this specification, environmental pollution and damage is defined as the presence of chemical, physical, or biological elements or agents which adversely affect human health or welfare; unfavorably alter ecological balances of importance to human life; affect other species of importance to man; or degrade the utility of the environment for aesthetic, cultural and/or historical purposes. The control of environmental pollution and damage requires consideration of air, water, and land, and includes management of visual aesthetics, noise, solid waste, radiant energy and radioactive materials, as well as other pollutants.

1.2.1 Subcontractors

Assurance of compliance with this section by subcontractors will be the responsibility of the Contractor.

1.2.2 Notification

The Contracting Officer will notify the Contractor in writing of any observed noncompliance with the aforementioned Federal, State or local laws or regulations, permits, and other elements of the Contractor's environmental protection plan. The Contractor shall, after receipt of such notice, inform the Contracting Officer of proposed corrective action and take such action as may be approved. If the Contractor fails to comply promptly, the Contracting Officer may issue an order stopping all or part of the work until satisfactory corrective action has been taken. No time extensions will be granted or costs or damages allowed to the Contractor for any such suspension.

1.3 SUBMITTALS

Government approval is required for submittals with "GA" designation; submittals having an "FIO" designation are for information only. The following shall be submitted in accordance with Section 01330 SUBMITTAL PROCEDURES:

SD-18 Records

Environmental Protection Plan; FIO.

Within 30 calendar days of receipt of Notice to Proceed, the Contractor shall submit in writing an environmental protection plan. Approval of the Contractor's plan will not relieve the Contractor of his responsibility for adequate and continuing control of pollutants and other environmental protection measures. The environmental protection plan shall include but not be limited to the following:

a. A list of Federal, State, and local laws, regulations, and permits concerning environmental protection, pollution control and abatement that are applicable to the Contractor's proposed operations and the requirements imposed by those laws, regulations, and permits.

b. Methods for protection of features to be preserved within authorized work areas. The Contractor shall prepare a listing of methods to protect resources needing protection; i.e., trees, grasses and ground cover, landscape features, air and water quality, fish and wildlife, soil, historical, archeological, and cultural resources.

c. Procedures to be implemented to provide the required environmental protection and to comply with the applicable laws and regulations. The Contractor shall set out the procedures to be followed to correct pollution of the environment due to accident, natural causes, or failure to follow the procedures set out in accordance with the environmental protection plan.

d. Location of the solid waste disposal area.

e. Drawings showing locations of any proposed temporary excavations or embankments for haul roads, material storage areas, structures, san! itary facilities, and stockpiles of excess or spoil materials.

f. Environmental monitoring plans for the job site, including land, water, air, and noise monitoring.

g. Traffic control plan.

h. Methods of protecting surface and ground water during construction activities.

i. Work area plan showing the proposed activity in each portion of the area and identifying the areas of limited use or nonuse. Plan should include measures for marking the limits of use areas.

j. Training for his personnel during the construction period.

PART 2 PRODUCTS (NOT APPLICABLE)

PART 3 EXECUTION

3.1 PROTECTION OF ENVIRONMENTAL RESOURCES

The environmental resources within the project boundaries and those affected outside the limits of permanent work under this contract shall be protected during the entire period of this contract. The Contractor shall confine his activities to areas defined by the drawings and specifications.

3.1.1 Land Resources

Prior to the beginning of any construction, the Contractor shall identify all land resources to be preserved within the Contractor's work area. Except in areas indicated on the drawings or specified to be cleared, the Contractor shall not remove, cut, deface, injure, or destroy land resources including trees, shrubs, grasses, topsoil, and land forms without special permission from the Contracting Officer. No ropes, cables, or guys shall be fastened to or attached to any trees for anchorage unless specifically authorized. Where such special emergency use is permitted, the Contractor shall provide effective protection for land and vegetation resources at all times as defined in the following subparagraphs.

3.1.1.1 Work Area Limits

Prior to any construction, the Contractor shall mark the areas that are not required to accomplish all work to be performed under this contract. Isolated areas within the general work area which are to be saved and protected shall also be marked or fenced. Monuments and markers shall be protected before construction operations commence. Where construction operations are to be conducted during darkness, the markers shall be visible. The Contractor shall convey to his personnel the purpose of marking and/or protection of all necessary objects.

3.1.1.2 Protection of Landscape

Trees, shrubs, grasses, land forms and other landscape features indicated and defined on the drawings to be preserved shall be clearly identified by marking, fencing, or wrapping with boards, or any other approved techniques.

3.1.1.3 Reduction of Exposure of Unprotected Erodible Soils

Earthwork brought to final grade shall be finished as indicated and specified. Side slopes and back slopes shall be protected as soon as practicable upon completion of rough grading. All earthwork shall be planned and conducted to minimize the duration of exposure of unprotected soils. Except in instances where the constructed feature obscures waste material areas, these areas shall not initially be cleared in total. Clearing of such areas shall progress in reasonably sized increments as needed to use the areas developed as approved by the Contracting Officer.

3.1.1.4 Protection of Disturbed Areas

Such methods as necessary shall be utilized to effectively prevent erosion and control sedimentation, including but not limited to the following:

a. Retardation and Control of Runoff: Runoff from the construction

site shall be controlled by construction of diversion ditches, benches, and berms to retard and divert runoff to protected drainage courses, and any measures required by areawide plans approved under Paragraph 208 of the Clean Water Act.

b. Erosion and Sedimentation Control Devices: The Contractor shall construct or install all temporary and permanent erosion and sedimentation control features as indicated on the drawings. Temporary erosion and sediment control measures such as berms, dikes, drains, grassing, and mulching shall be maintained until permanent drainage and erosion control facilities are completed and operative.

3.1.1.5 Contractor Facilities and Work Areas

a. Location of Field Offices, Storage, and Other Contractor Facilities: The Contractors' field offices, staging areas, stockpile storage, and temporary buildings shall be placed in areas designated on the drawings or as directed by the Contracting Officer. Temporary movement or relocation of Contractor facilities shall be made only on approval by the Contracting Officer.

b. Spoil Areas on Government Property: Spoil areas shall be managed and controlled to limit spoil to areas designated on the drawings and prevent erosion of soil or sediment from entering nearby waters. Spoil areas shall be developed in accordance with the grading plan indicated on the drawings.

c. Temporary Excavations and Embankments: Temporary excavations and embankments for work areas shall be controlled to protect adjacent areas from despoilment.

3.1.2 Disposal of Wastes

Disposal of wastes shall be as specified in Section 02220 DEMOLITION and as specified hereinafter.

3.1.2.1 Solid Wastes

Solid wastes (excluding clearing debris) shall be placed in containers which are emptied on a regular schedule. All handling and disposal shall be conducted to prevent contamination. Segregation measures shall be employed such that no hazardous or toxic waste will become commingled with solid waste. The Contractor shall transport all solid waste off Government property and dispose of it in compliance with Federal, State, and local requirements for solid waste disposal. The Contractor shall comply with site procedures and with Federal, State, and local laws and regulations pertaining to the use of landfill areas.

3.1.2.2 Chemical Wastes:

Chemical wastes shall be stored in corrosion resistant containers, removed from the work area and disposed of in accordance with Federal, State, and local laws and regulations.

3.1.2.3 Hazardous Wastes:

The Contractor shall take sufficient measures to prevent spillage of hazardous and toxic materials during dispensing and shall collect waste in suitable containers observing compatibility. The Contractor shall transport all hazardous waste off Government property and dispose of it in compliance with Federal and local laws and regulations. Spills of hazardous or toxic materials shall be immediately reported to the Contracting Officer. Cleanup and cleanup costs due to spills shall be the responsibility of the Contractor.

3.1.3 Historical, Archeological, and Cultural Resources

If during excavation or other construction activities any unidentified or unanticipated resources are discovered or found, all activities that may damage or alter such resources shall be temporarily suspended. These resources or cultural remains (prehistoric or historic surface or subsurface) include but are not limited to: any human skeletal remains or burials; artifacts; shell, midden, bone, charcoal, or other deposits; rocks or coral alignments, paving, wall, or other constructed features; and any indication of agricultural or other uses. Upon such discovery or find, the Contractor shall immediately notify the Contracting Officer. When so notified, the Contracting Officer will initiate action so that prompt and proper data recovery can be accomplished. In the mean time, recording and preservation of historical and archeological finds during construction activities shall be reported in accordance with the SPECIAL CONTRACT REQUIREMENTS.

3.1.4 Water Resources

The Contractor shall keep construction activities under surveillance, management, and control to avoid pollution of surface and ground waters. All activities, equipment processes, and work operated or performed by the Contractor in accomplishing the specified construction shall be in strict conformance with the State of Hawaii Department of Health (HIDOH) Administrative Rules, Chapter 11-54 and HIDOH Administrative Rules, Chapter 11-55. **The Whole Barracks Renewal (WBR) Project has a National Pollution Discharge Elimination System (NPDES) General Permit pending with HIDOH. A DOH-NOI Form 1 Notice of Intent (NOI) to be Covered under General Permit, along with HAR Chapter 11-55 Appendix C--General Best, Best Management Plan (BMP) is pending at the HIDOH for the entire WBR Phase 2 project (multiphased project from FY00 through FY05). Site Specific Plans (SSP) (Site Specific Best Management Plan) shall be prepared by the Contractor and submitted to HIDOH to obtain permit coverage for this phase of the WBR project a minimum of 30 days prior to start of construction activities. Any variations to the current General BMP enlisted by the Contractor (in the SSP) shall be submitted to the Contracting Officer or his representative for approval. Once approved, Contractor shall incorporate proposed changes in his site specific plans and submit them to the State of Hawaii Dept. of Health, Environmental Management Division, Clean Water Branch.**

All activities, equipment processes, and work operated or performed by the Contractor in accomplishing the specified construction shall be in strict conformance with the General & Site Specific Best Management Plans (BMP) for this project. Site Specific BMP shall be prepared by the Contractor after contract award.

The Contractor shall include the following Operator/General Contractor

Information and prepare DOH NOI Form 1 Item #4 for this FY00 PH 2A project as part of the site specific plan (SSP) preparation:

Legal Name:

Main Office Street Address:

City, State & Zip:

Contact Person & Title:

Phone No:

Fax No:

If main office is not a local address, Contractor shall also submit local address, Contact Person & Title, & Phone and FAX Nos.

Contractor shall obtain all required additional NPDES permits for construction activities (submitting a General Permit DOH-NOI Form 1 Notice of Intent (NOI) to be Covered Under General Permit, along with applicable HAR Chapter 11-55 Appendix/Appendices (B,C,D,E,F,G,H and/or I). Contractor is responsible for all applicable filing fees (if required) and for preparation of required supporting documents. As specified in Section 342D-11 Hawaii Revised Statutes, if the project has any storm water discharge before a Notice of General Permit Coverage (NGPC) is issued, the permittee could face penalties of up to $25,000 per day per violation. Contractor shall be fully liable for the entire amount of any and all penalties imposed as a result of his actions (e.g. if work is begun prior to receiving NGPC and the state imposes penalties for storm water discharge to the Government, the Contractor shall be responsible for all penalties.

3.1.4.1 Monitoring of Water Areas:

Monitoring of water areas affected by construction activities shall be the responsibility of the Contractor. All water areas affected by construction activities shall be monitored by the Contractor.

3.1.5 Fish and Wildlife Resources

The Contractor shall keep construction activities under surveillance, management and control to minimize interference with, disturbance to and damage of fish and wildlife. Species that require specific attention along with measures for their protection will be listed by the Contractor prior to beginning of construction operations.

3.1.6 Air Resources

The Contractor shall keep construction activities under surveillance, management and control to minimize pollution of air resources. All activities, equipment, processes, and work operated or performed by the Contractor in accomplishing the specified construction shall be in strict accordance with HIDOH, Chapter 59, HIDOH, Chapter 60.1, and all Federal emission and performance laws and standards. Ambient Air Quality Standards set by the Environmental Protection Agency shall be maintained for those construction operations and activities specified in this section. Special management techniques as set out below shall be implemented to control air pollution by the construction activities which are included in the contract. The Contractor shall be responsible for obtaining any necessary

permits under HIDOH, Chapter 60.1, for contractor equipment.

3.1.6.1 Particulates

a. Dust particles, aerosols, and gaseous by-products from all construction activities, processing and preparation of materials, such as from asphaltic batch plants, shall be controlled at all times, including weekends, holidays and hours when work is not in progress.

b. The Contractor shall maintain all excavations, stockpiles, haul roads, permanent and temporary access roads, plant sites, spoil areas, borrow areas, and all other work areas within or outside the project boundaries free from particulates which would cause the air pollution standards mentioned in paragraph Air Resources, herein before, to be exceeded or which would cause a hazard or a nuisance. Sprinkling, chemical treatment of an approved type, light bituminous treatment, baghouse, scrubbers, electrostatic precipitators or other methods will be permitted to control particulates in the work area. Sprinkling, to be efficient, must be repeated at such intervals as to keep the disturbed area damp at all times. The Contractor must have sufficient competent equipment available to accomplish this task. Particulate control shall be performed as the work proceeds and whenever a particulate nuisance or hazard occurs.

3.1.6.2 Hydrocarbons and Carbon Monoxide

Hydrocarbons and carbon monoxide emissions from equipment shall be controlled to Federal and State allowable limits at all times.

3.1.6.3 Odors

Odors shall be controlled at all times for all construction activities, processing and preparation of materials.

3.1.6.4 Monitoring of Air Quality

Monitoring of air quality shall be the responsibility of the Contractor. All air areas affected by the construction activities shall be monitored by the Contractor.

3.1.7 Sound Intrusions

The Contractor shall keep construction activities under surveillance, and control to minimize damage to the environment by noise. The Contractor shall comply with the provisions of HIDOH, Chapter 46.

3.2 POST CONSTRUCTION CLEANUP

The Contractor shall clean up area(s) used for construction.

3.3 RESTORATION OF LANDSCAPE DAMAGE

The Contractor shall restore all landscape features damaged or destroyed during construction operations outside the limits of the approved work areas. Such restoration shall be in accordance with the plan submitted for approval by the Contracting Officer. This work will be accomplished at the Contractor's expense.

3.4 MAINTENANCE OF POLLUTION CONTROL FACILITIES

The Contractor shall maintain all constructed facilities and portable pollution control devices for the duration of the contract or for that length of time construction activities create the particular pollutant.

3.5 TRAINING OF CONTRACTOR PERSONNEL IN POLLUTION CONTROL

The Contractor shall train his personnel in all phases of environmental protection. The training shall include methods of detecting and avoiding pollution, familiarization with pollution standards, both statutory and contractual, and installation and care of facilities (vegetative covers, and instruments required for monitoring purposes) to ensure adequate and continuous environmental pollution control.

-- End of Section --

SECTION TABLE OF CONTENTS

DIVISION 01 - GENERAL REQUIREMENTS

SECTION 01572

CONSTRUCTION AND DEMOLITION WASTE MANAGEMENT

PART 1 GENERAL

1.1 DEFINITIONS
1.1.1 Construction and Demolition Debris
1.1.2 Mandatory Materials
1.1.3 Recyclable Materials
1.1.4 Recycling Facility
1.1.5 Salvage and Reuse
1.1.6 Salvage for Resale
1.1.7 Trash
1.1.8 Waste Materials
1.2 SUBMITTALS
1.3 CONSTRUCTION WASTE MANAGEMENT
1.3.1 General
1.3.2 Construction Waste Management Operations
1.3.3 Waste Management Plan
1.3.4 Hazardous and Toxic Waste

PART 2 PRODUCTS (Not Used)

PART 3 EXECUTION

3.1 PROGRAM IMPLEMENTATION AND MONITORING
3.2 HAZARDOUS MATERIAL/HAZARDOUS WASTES
3.3 MANDATORY MATERIALS
3.4 SALVAGE AND REUSE
3.5 SEPARATION OF RECYCLABLE WASTE MATERIALS

-- End of Section Table of Contents --

SECTION 01572

CONSTRUCTION AND DEMOLITION WASTE MANAGEMENT

PART 1 GENERAL

1.1 DEFINITIONS

1.1.1 Construction and Demolition Debris

Solid waste, largely inert waste, resulting from the demolition or razing of buildings, of roads, or other structures. Construction and demolition waste does not include cleanup materials contaminated with hazardous substances, friable asbestos, waste paints, solvents, sealers, adhesives, or similar materials as determined by the Contracting Officer.

1.1.2 Mandatory Materials

Mandatory materials are those materials which comprise the greater portion of the construction and demolition debris and have a high potential for salvage for resale, salvage for reuse, recycling and energy recovery. The mandatory materials for this project are:

Soil
Concrete

1.1.3 Recyclable Materials

Products and materials that can be recovered and remanufactured into a new product. Some of the recyclable materials may include, but are not limited to, the following:

a. Metals (ferrous and non-ferrous), including banding, metal studs, ductwork, piping

b. Asphaltic concrete paving

c. Portland cement concrete

d. Land clearing debris including trees and plant materials

e. Native rock and granular fill

f. Gypsum products

g. Paper and cardboard

h. Wood products, including structural, finish, crates and pallets

i. Brick and masonry

j. Carpet and padding

k. Plastics

l. Copper wiring

m. Mechanical and electrical products and equipment

1.1.4 Recycling Facility

A business that specializes in collecting, handling, processing, distributing, or remanufacturing waste materials generated by demolition and new construction projects, into products or materials that can be used for this project or by others. The business must have the necessary permits as stated herein and any other permits as required by the local, State, and Federal Government.

1.1.5 Salvage and Reuse

Existing usable product or material that can be saved and reused in some manner on the project site. Materials that can be salvaged and reused must comply with the applicable technical specifications.

1.1.6 Salvage for Resale

Existing usable transported to landfills for disposal, that are product or material that can be saved and removed intact (as is) from the project site to another site for resale to others without remanufacturing.

1.1.7 Trash

Product or material transported to landfills for disposal, that are unable to be salvaged for resale, salvaged and reused, returned, recycled, or burned for energy recovery.

1.1.8 Waste Materials

Product or material that have the potential to be salvaged for resale, salvaged and reused, returned to vendors, or recycled.

1.2 SUBMITTALS

Government approval is required for submittals with a "G" designation; submittals not having a "G" designation will be approved by the QC organization for information only. The following shall be submitted in accordance with Section 01330 SUBMITTAL PROCEDURES:

SD-08 Reports

Construction Waste Management Plan

Recycling Facility Permits

Recycling Facility Permit from the State of Hawaii, Department of Health Office Solid Waste Management, to operate a recycling facility.

Permit from the City and County of Honolulu Department of Planning, to operate a solid waste transfer station

1.3 CONSTRUCTION WASTE MANAGEMENT

1.3.1 General

a. Unless otherwise directed by the Contracting Officer, reference to

recycling, salvage, or reuse in all technical specifications shall be superceded by this specification.

b. The Contractor shall use all means available to recycle mandatory items. All other debris shall be recycled to the greatest extent practical and economically feasible to divert construction and demolition waste from landfills. Revenues and other savings generated by the waste management program shall belong to the Contractor.

1.3.2 Construction Waste Management Operations

The Contractor shall manage construction waste and require all subcontractors, vendors, and suppliers to participate in the effort. The Contractor shall establish a construction waste management program that includes the following categories:

a. Minimizing Packaging Materials

b. Salvage and reuse: First consideration shall be given to salvage for reuse since little or no re-processing is necessary and less pollution is created when items are reused in their original form. Reuse may be on or off-site. The contractor shall ensure appropriate permits are provided for off-site use, where applicable.

c. Salvage for resale or donation: Sale or donation of salvaged material suitable for reuse shall be considered. Salvaged materials, other than those specified for reinstallation, shall not be used in this projects or sold on-site.

d. Recycling: Waste materials that cannot be salvaged and reused, but have value as being recyclable, shall be recycled. The Contractor shall be responsible for implementation of any special programs involving rebates or similar incentives related to recycling construction waste for this project.

e. Disposal: Waste materials with no practical use or economic benefit shall be designated as trash and transported to a landfill for disposal.

Waste materials that cannot be salvaged and reused, and have value as being recyclable, shall be recycled. Only trash shall be transported to a landfill. The Contractor shall be responsible for implementation of any special programs involving rebates or similar incentives related to recycling construction waste for this project.

1.3.3 Waste Management Plan

The Contractor shall perform a site visit to determine the types and quantity of construction waste anticipated and identify salvage for resale, salvage and reuse, recycling and disposal options available. Within 30 days after contract award and prior to performing any work, the contractor shall submit a Waste Management Plan for review and acceptance. Physical work that generates any waste material shall not commence until Waste Management Plan is accepted by the Government. The Waste Management Plan shall at a minimum include the following:

a. Contractor and project identification information

b. Name of individuals on the Contractor's staff responsible for waste prevention and management.

c. Types of solid resource materials and wastes that will be produced (example Waste Management Plan and Tracking form attached to the end of this section).

d. Materials to be salvaged, reused, and recycled, both on-site and off-site

e. Procedures to be used such as:

(1) Actions that will be taken to reduce trash.

(2) Description of the specific procedures to be used in recycling/reuse of the various materials generated

(3) Areas and equipment to be used for processing, sorting, and temporary storage of wastes.

(4) On-site concrete and asphalt crushing for use on-site, etc.

f. Characterization, including estimated types and quantities, of the waste to be generated(mandatory recyclables and other products the Contractor deems appropriate).

g. Names and locations of salvage, reuse, recycling facilities/sites and permits.

h. Names and locations of trash disposal facilities/sites

i. Identification of trash materials under this contract.

Contractor shall revise and resubmit when required the Waste Management Plan to incorporate review comments by the Contracting Officer. Contracting Officer's acceptance of the Waste Management Plan is conditional and will not otherwise relieve the Contractor of responsibility for adequate and continuing control of pollutants and other environmental protection measures. The Government reserves the right to require the Contractor to update and incorporate revisions, during the course of the construction, into the plan as determined by the Contracting Officer.

1.3.4 Hazardous and Toxic Waste

Hazardous and Toxic wastes shall not be included as demolition and construction debris. All hazardous and toxic waste materials shall be removed prior to demolition in accordance with applicable sections of the technical specification.

PART 2 PRODUCTS (Not Used)

PART 3 EXECUTION

3.1 PROGRAM IMPLEMENTATION AND MONITORING

The Contractor shall implement and maintain, for the duration of the project, the construction waste management program. The Contractor shall establish a reporting worksheet to monitor and document the program. Contractor shall complete a Waste Management Tracking Form (sample form

attached to the end of this Section) on a monthly basis as described below:

a. Fill in the project title; contract number; name and address of company submitting the Tracking Form; the printed name, signature, and daytime phone number of (FAX if available) the person completing the form; the beginning and ending dates of the period covered; and the date that the form is completed.

b. Report disposal/recycling either in tons or in cubic yards (tons preferred). Indicate zero (0) if there is no quantity to report for a type of material.

c. Indicate locations to which materials are delivered.

d. Attach to the form legible copies of weigh tickets, receipts, invoices, or other documents that specifically identify the Project generating the materials. Said documents must be from sites and/or facilities that can legally accept the materials for purposes of reuse, recycling, or disposal.

e. Calculate a running total of all reuse, salvage, recycle and trash streams. Also calculate a total percent of reuse, salvage and recycle streams and the total percentage of trash disposed.

Failure to complete monthly tracking forms shall be cause for withholding any payment due the Contractor under this contract.

3.2 HAZARDOUS MATERIAL/HAZARDOUS WASTES

The Contractor shall notify the Contracting Officer, if any non-acceptable materials such as hazardous materials or hazardous wastes are encountered during removal and separation.

3.3 MANDATORY MATERIALS

Mandatory Materials shall be recycled.

3.4 SALVAGE AND REUSE

a. The Contractor shall encourage the practice of efficient waste management when, sizing, cutting, and installing products and materials.

b. Soil and satisfactory fill reused on site shall also be a part of Construction and Demolition Waste Management Program and shall be indicated on the Waste Management Plan and on the Tracking Forms.

3.5 SEPARATION OF RECYCLABLE WASTE MATERIALS

The Contractor shall provide the necessary on-site containers and/or bins, to effectively facilitate the Construction and Demolition Waste Management Program. The container/bins shall be clearly and appropriately marked. The Contractor shall separate construction and demolition waste by one or a combination of the following methods:

a. Source Separation Method: Waste products and materials that are recyclable shall be separated from trash and sorted into approximately marked separate containers and then transported to the respective recycling facility for further processing. Trash shall be transported to a landfill for disposal.

b. Co-Mingled Method: All construction waste is placed into a single container and then transported to a recycling facility where the recyclable materials are sorted and processed. Processing includes separation for energy recovery. The remaining trash shall be transported to a landfill for disposal.

c. Other methods proposed by the Contractor and approved by the Contracting Officer.

-- End of Section --

WASTE MANAGEMENT PLAN

Project Title:

Contract Number: | Date:

Contractor s Name:
Street Address:
City, State, Zip:

Individual Responsible for Waste Prevention/Management: _____
Signature: _____

Business Phone: | FAX:

These are the procedures to be used for re-using, salvaging, recycling materials or disposal of materials. Indicate the procedures (by number), types of materials, and estimated quantities that will be recycled or disposed in the section below:

1. Hand-wrecking to recover salvageable materials.
2. On-site concrete and asphalt crushing for use on-site.
3. On-site concrete and asphalt crushing for use off-site.
4. On-site source separation (specific bins) of materials and separately hauling to recyclers.
5. Hauling of mixed materials to a mixed debris recycling facility for recycle and disposal.
6. Other (specify):

REUSE/SALVAGE/RECYCLING OF MATERIALS

Type of Material or Recycle Stream	Number of Procedure to be Used (as above)	Recycling or Disposal Facility Name and Location	Approximate Quantities (US Tons (2000 pounds/US Ton))
Example: Concrete	4	ABC Demo Honolulu	500
Asphalt			
Concrete			
Composting			
Soil			
Fill (Sat Mat I)			
Wood Salvage			
Plastics			
Ferrous Metal			
Brass/Copper			
Aluminum			
Other Non-Ferrous			
Energy Recovery			
Salvage Items Describe:			
Other Describe:			
Energy Recovery			
Total of All Reuse/Recyclable/Salvageable Materials			

DISPOSAL OF NON REUSE/RECYCLABLE/SALVAGEABLE MATERIALS

Disposable Materials		
Total Recycled and Disposed Material		

WASTE MANAGEMENT TRACKING FORM

Project Title:	
Contract Number:	Date Completed:
Contractor s Name: Street Address: City, State, Zip: Name of Individual Responsible for Accuracy of this Form: _____ Signature: _____	
Business Phone:	FAX:

REUSE/SALVAGE/RECYCLING OF MATERIALS

Type of Material or Recycle Stream	Recycling or Disposal Facility Name and Location	Quantities (US Tons (2000 pounds/US Ton))	
		Current Period (Inclusive Dates)	Total All Periods
Example: Concrete	ABC Demo Honolulu	120	500
Asphalt			
Concrete			
Composting			
Soil			
Fill (Satisfactory Material)			
Wood Salvage			
Ferrous Metal			
Brass/Copper			
Aluminum			
Other Non-Ferrous			
Plastics			
Salvage Items Describe:			
Other Describe:			
Energy Recovery			
Total of All Reuse/Recyclable/Salvageable Materials			
Cumulative Percent of Recycled Materials: (Total of All Periods of Total of All Reused, Recyclable, Salvageable Materials)/(Total of All Periods of Total Recycled and Disposed Materials)			%

DISPOSAL OF NON REUSE/RECYCLABLE/SALVAGEABLE MATERIALS

Disposable Materials		
Total Recycled and Disposed Material		
Cumulative Percent of Disposed Materials: (Total of All Periods of Disposed Materials)/(Total of All Periods of Total Recycled and Disposed Materials)		%

SECTION TABLE OF CONTENTS

DIVISION 02 - SITE WORK

SECTION 02316

EXCAVATION, TRENCHING, AND BACKFILLING FOR UTILITIES SYSTEMS

PART 1 GENERAL

1.1 REFERENCES
1.2 DEGREE OF COMPACTION
1.3 SUBMITTALS

PART 2 PRODUCTS

2.1 MATERIALS
2.1.1 Satisfactory Materials
2.1.2 Unsatisfactory Materials
2.1.3 Cohesionless and Cohesive Materials
2.1.4 Unyielding Material
2.1.5 Unstable Material
2.1.6 Select Granular Material
2.1.7 Initial Backfill Material
2.1.8 S4C Material
2.2 PLASTIC MARKING TAPE

PART 3 EXECUTION

3.1 EXCAVATION
3.1.1 Shoring
3.1.2 Trench Excavation Requirements
3.1.2.1 Bottom Preparation
3.1.2.2 Removal of Unyielding Material
3.1.2.3 Removal of Unstable Material
3.1.2.4 Excavation for Appurtenances
3.1.2.5 Jacking, Boring, and Microtunneling
3.1.3 Stockpiles
3.2 BACKFILLING AND COMPACTION
3.2.1 Trench Backfill
3.2.1.1 Replacement of Unyielding Material
3.2.1.2 Replacement of Unstable Material
3.2.1.3 Bedding and Initial Backfill
3.2.1.4 Final Backfill
3.2.2 Backfill for Appurtenances
3.3 SPECIAL REQUIREMENTS
3.3.1 Gas Distribution
3.3.2 Water Lines
3.3.3 Heat Distribution System
3.3.4 Electrical Distribution System
3.3.5 Plastic Marking Tape
3.4 TESTING
3.4.1 Testing Facilities
3.4.2 Testing of Backfill Materials

3.4.3 Field Density Tests
3.4.4 Displacement of Sewers

-- End of Section Table of Contents --

SECTION 02316

EXCAVATION, TRENCHING, AND BACKFILLING FOR UTILITIES SYSTEMS

PART 1 GENERAL

1.1 REFERENCES

The publications listed below form a part of this specification to the extent referenced. The publications are referred to in the text by basic designation only.

AMERICAN SOCIETY FOR TESTING AND MATERIALS (ASTM)

ASTM C 117	(1987) Materials Finer than 75 um (No. 200) Sieve in Mineral Aggregates by Washing
ASTM C 136	(1984) Sieve Analysis of Fine and Coarse Aggregates
ASTM D 422	(1963; R 1990) Particle-Size Analysis of Soils
ASTM D 1556	(1990; R 1996) Density and Unit Weight of Soil in Place by the Sand-Cone Method
ASTM D 1557	(1991) Laboratory Compaction Characteristics of Soil Using Modified Effort (56,000 ft-lbf/cu. ft. (2,700 kN-m/cu. m.))
ASTM D 2487	(1993) Classification of Soils for Engineering Purposes (Unified Soil Classification System)
ASTM D 2922	(1996) Density of Soil and Soil-Aggregate in Place by Nuclear Methods (Shallow Depth)
ASTM D 3017	(1988; R 1993) Water Content of Soil and Rock in Place by Nuclear Methods (Shallow Depth)
ASTM D 4253	(1991) Maximum Density and Unit Weight of Soils Using a Vibratory Table
ASTM D 4318	(1984) Liquid Limit, Plastic Limit, and Plasticity Index of Soils

1.2 DEGREE OF COMPACTION

Degree of compaction is a percentage of the maximum density obtained by the test procedure presented in ASTM D 1557-91, Method C, for material that has no more than 30 percent retained on the 19 mm (3/4 inch) sieve and has more than 20 percent retained on the 9.5 mm (3/8 inch) sieve. Where the

material does not met these gradation requirements, AASHTO T 180 Method D will be used. Where free draining soils, i.e., sand or gap-graded aggregate are to be compacted, use ASTM D 4253. The procedure will be abbreviated below as a percentage of laboratory density.

1.3 SUBMITTALS

Government approval is required for submittals with a "GA" designation; submittals having an "FIO" designation are for information only. The following shall be submitted in accordance with Section 01330 SUBMITTAL PROCEDURES:

SD-09 Reports

Field Density Tests; FIO. Testing of Backfill Materials; GA.

Copies of all laboratory and field test reports within 24 hours of the completion of the test.

PART 2 PRODUCTS

2.1 MATERIALS

2.1.1 Satisfactory Materials

On-site excavated materials are satisfactory materials for fills and backfills. Imported materials classified in ASTM D 2487 as GW, GP, GM, GC, SW, SP, SM, SC, (ML, MH, and CL) and free from roots and other organic matter, trash, debris, and stones larger than 75 mm in any dimension are satisfactory. In addition, imported satisfactory materials shall have liquid limits less than 60 and plasticity indexes less than 30. Liquid limit and plasticity index shall be determined in accordance with ASTM D 4318.

2.1.2 Unsatisfactory Materials

Materials which do not comply with the requirements for satisfactory materials are unsatisfactory. Materials classified in ASTM D 2487 as CH, PT, OH, and OL are unsatisfactory. Unsatisfactory materials also include man-made fills, trash, refuse, or backfills from previous construction. Unsatisfactory material also includes material classified as satisfactory which contains root and other organic matter, and stones larger than 75 mm . The Contracting Officer shall be notified of any contaminated materials.

2.1.3 Cohesionless and Cohesive Materials

Cohesionless materials shall include materials classified in ASTM D 2487 as GW, GM, GC, GP, SW, SC, SM and SP. Cohesive materials shall include materials classified as ML, CL, MH, and CH.

2.1.4 Unyielding Material

Unyielding material shall consist of rock and gravelly soils with stones greater than 75 millimeters in any dimension or as defined by the pipe manufacturer, whichever is smaller.

2.1.5 Unstable Material

Unstable material shall consist of materials too wet to properly support

the utility pipe, conduit, or appurtenant structure.

2.1.6 Select Granular Material

Select granular material shall consist of well-graded sand, gravel, crushed gravel or crushed stone composed of hard, tough and durable particles, and shall contain not more than 10 percent by weight of material passing a 0.075 mm mesh sieve and 20 to 60 percent by weight passing the No. 4 sieve. The maximum allowable aggregate size shall be 25 millimeters, or the maximum size recommended by the pipe manufacturer, whichever is smaller.

2.1.7 Initial Backfill Material

Initial backfill shall consist of select granular material or satisfactory materials free from rocks 25 millimeters or larger in any dimension or free from rocks of such size as recommended by the pipe manufacturer, whichever is smaller. When the pipe is coated or wrapped for corrosion protection, the initial backfill material shall be free of stones larger than 25 millimeters in any dimension or as recommended by the pipe manufacturer, whichever is smaller.

2.1.8 S4C Material

S4C material shall consist of a granular material meeting the following gradation:

Sieve Opening	Percent Passing (%)
12.5 mm	100
9.5 mm	85-100
4.75 mm	10-30
2.36 mm	0-10
1.00 mm	0-5

Compacted S4C material shall be the only backfill material used in trench excavations within paved areas. S4C material shall extend from the trench bottom to the finish subgrade (bottom of base course).

2.2 PLASTIC MARKING TAPE

Plastic marking tape shall be acid and alkali-resistant polyethylene film, 152 mm (6 inches) wide with minimum thickness of 0.102 mm (0.004 inch). Tape shall have a minimum strength of 12.1 MPa (1750 psi) lengthwise and 10.3 MPa (1500 psi) crosswise. The tape shall be manufactured with integral wires, foil backing or other means to enable detection by a metal detector when the tape is buried up to 1 meter deep. The tape shall be of a type specifically manufactured for marking and locating underground utilities. The metallic core of the tape shall be encased in a protective jacket or provided with other means to protect it from corrosion. Tape color shall be as specified in TABLE 1 and shall bear a continuous printed inscription describing the specific utility.

TABLE 1. Tape Color

Red:	Electric
Yellow:	Gas, Oil, Dangerous Materials
Orange:	Telephone, Telegraph, Television, Police, and Fire Communications
Blue:	Water Systems
Green:	**Chilled Water Supply (CHWS); Chilled Water Return (CHWR); Heat Pump Water Supply (HPWS; Heat Pump Water Return (HPWR)**

PART 3 EXECUTION

3.1 EXCAVATION

Prior to beginning excavation work, the Contractor shall obtain excavation permits from DPW & Verizon. Contractor shall complete the DPW form "Excavation Clearance Requirements" and submit the completed form to the Contracting Officer and DPW in order to obtain the following:

1. "DPW Excavation Permit" for Water, Sewer, Storm Drainage, Electrical, Gas, Fuel lines, etc.

2. Excavation Permit for telephone lines (communications) from Verizon and DPW Greg Gardner (Bldg T-121, Fort Shafter, Phone 438-8066).

The Contractor shall carry both permits at all times during excavation.

Excavation shall be performed to the lines and grades indicated. Rock excavation shall include removal and disposition of material defined as rock in paragraph MATERIALS. Earth excavation shall include removal and disposal of material not classified as rock excavation. During excavation, material satisfactory for backfilling shall be stockpiled in an orderly manner at a distance from the banks of the trench equal to 1/2 the depth of the excavation, but in no instance closer than 600 mm. Excavated material not required or not satisfactory for backfill shall be removed from the site and disposed of off base. Grading shall be done as may be necessary to prevent surface water from flowing into the excavation, and any water accumulating shall be removed to maintain the stability of the bottom and sides of the excavation. Unauthorized overexcavation shall be backfilled in accordance with paragraph BACKFILLING AND COMPACTION at no additional cost to the Government.

3.1.1 Shoring

Prior to bid, the contractor shall retain Hawaii licensed engineers with experience and expertise in geotechnical and structural design of shoring and underpinning. The licensed engineers shall have a minimum of 3 years of experience in designing shoring for similar excavation size, excavation depth, and subsurface soil and ground water conditions. The contractor shall insure that his consultant's design is compatible with the contractors pipe installation method. The shoring design and installation shall protect workers; allow testing of the compacted backfill, and prevent subsidence of adjacent ground and settlement of nearby structures, pavements, and slabs-on-grade; and prevent damage to adjacent subsurface utilities.

Prior to the start of excavation the contractor shall perform a detailed visual examination of the existing structures. Existing cracks and other distress in the building and structures shall be photographed, crack widths measured, and the distresses recorded in writing and submitted as a report documenting pre-existing conditions.

The contractor shall establish a base line condition before excavation by:

a. Installing at least 4 Avongard Calibrated Crack Monitors (or equal) on pre-existing cracks on buildings walls.

b. Performing level surveys on at least 4 locations adjacent to or within the existing building. The level survey shall have elevations measured to the nearest 0.3 mm (0.001 feet).

c. Reading the Crack Monitors and perform the level survey a minimum of 3 times and submit data to the retained consultant and the government within 24 hours of the reading.

During the trench excavation the contractor shall:

a. Read the Crack Monitors and perform the level survey a minimum of 3 times during the excavation and submit data to the retained consultant and the government within 24 hours of the reading.

b. Stop work if movements are observed.

c. Notify the retained consultants and implements their recommendations at no cost to the government.

3.1.2 Trench Excavation Requirements

The trench shall be excavated as recommended by the manufacturer of the pipe to be installed. Trench walls below the top of the pipe shall be sloped, or made vertical, and of such width as recommended in the manufacturer's installation manual. Where no manufacturer's installation manual is available, trench walls shall be made vertical. Trench walls shall be shored, cut back to a stable slope, or provided with equivalent means of protection for employees who may be exposed to moving ground or cave in. Trench walls which are cut back shall be excavated to at least the angle of repose of the soil. Special attention shall be given to slopes which may be adversely affected by weather or moisture content. The trench width below the top of pipe shall not exceed 600 mm (24 inches) plus pipe outside diameter (O.D.) for pipes of less than 600 mm (24 inches) inside diameter and shall not exceed 900 mm (36 inches) plus pipe outside diameter for sizes larger than 600 mm (24 inches) inside diameter. Where recommended trench widths are exceeded, redesign, stronger pipe, or special installation procedures shall be utilized by the Contractor. The cost of redesign, stronger pipe, or special installation procedures shall be borne by the Contractor without any additional cost to the Government.

3.1.2.1 Bottom Preparation

The bottoms of trenches shall be accurately graded to provide uniform bearing and support for the bottom quadrant of each section of the pipe. Bell holes shall be excavated to the necessary size at each joint or coupling to eliminate point bearing. Stones of 25 millimeters or greater in any dimension, or as recommended by the pipe manufacturer, whichever is smaller, shall be removed to avoid point bearing.

3.1.2.2 Removal of Unyielding Material

Where overdepth is not indicated and unyielding material is encountered in the bottom of the trench, such material shall be removed 150 millimeters below the required grade and replaced with suitable materials as provided in paragraph BACKFILLING AND COMPACTION.

3.1.2.3 Removal of Unstable Material

Where unstable material is encountered in the bottom of the trench, such material shall be removed to the depth directed and replaced to the proper grade with select granular material as provided in paragraph BACKFILLING AND COMPACTION. When removal of unstable material is required due to the Contractor's fault or neglect in performing the work, the resulting material shall be excavated and replaced by the Contractor without additional cost to the Government.

3.1.2.4 Excavation for Appurtenances

Excavation for manholes, catch-basins, inlets, or similar structures shall be of sufficient size to permit the placement and removal of forms for the full length and width of structure footings and foundations as shown. Rock shall be cleaned of loose debris and cut to a firm surface either level, stepped, or serrated, as shown or as directed. Loose disintegrated rock and thin strata shall be removed. Removal of unstable material shall be as specified above. When concrete or masonry is to be placed in an excavated area, special care shall be taken not to disturb the bottom of the excavation. Excavation to the final grade level shall not be made until just before the concrete or masonry is to be placed.

3.1.2.5 Jacking, Boring, and Microtunneling

Microtunneling shall be used for pipe installation for DL# DAA from Sta 0 + 00 to 3 + 04.271 as specified in Section 02200 MICROTUNNELING. For all other areas, unless otherwise indicated, excavation shall be by open cut except that sections of a trench may be jacked, bored, or tunneled if, in the opinion of the Contracting Officer, the pipe, cable, or duct can be safely and properly installed and backfill can be properly compacted in such sections.

3.1.3 Stockpiles

Stockpiles of satisfactory shall be placed and graded as specified. Stockpiles shall be kept in a neat and well drained condition, giving due consideration to drainage at all times. The ground surface at stockpile locations shall be cleared, grubbed, and sealed by rubber-tired equipment, excavated satisfactory and unsatisfactory materials shall be separately stockpiled. Stockpiles of satisfactory materials shall be protected from contamination which may destroy the quality and fitness of the stockpiled material. If the Contractor fails to protect the stockpiles, and any material becomes unsatisfactory, such material shall be removed and replaced with satisfactory material from approved sources at no additional cost to the Government. Locations of stockpiles of satisfactory materials shall be subject to prior approval of the Contracting Officer.

3.2 BACKFILLING AND COMPACTION

Backfill material shall consist of satisfactory material, select granular

material, or initial backfill material as required. Backfill shall be placed in layers not exceeding 150 mm loose thickness for compaction by hand operated machine compactors, and 200 mm loose thickness for other than hand operated machines, unless otherwise specified. Each layer shall be compacted to at least 95 percent maximum density for cohesionless soils and 90 percent maximum density for cohesive soils, unless otherwise specified.

For trench excavations beneath existing roads and streets, satisfactory material shall be replaced by compacted S4C material. S4C material shall be placed in lifts not exceeding 150 mm (6 inches) loose thickness and compacted to at least 95 percent maximum density.

3.2.1 Trench Backfill

Trenches shall be backfilled to the grade shown. The trench shall be backfilled to 600 mm above the top of pipe prior to performing the required pressure tests. The joints and couplings shall be left uncovered during the pressure test.

3.2.1.1 Replacement of Unyielding Material

Unyielding material removed from the bottom of the trench shall be replaced with select granular material or initial backfill material.

3.2.1.2 Replacement of Unstable Material

Unstable material removed from the bottom of the trench or excavation shall be replaced with select granular material placed in layers not exceeding 150 mm loose thickness.

3.2.1.3 Bedding and Initial Backfill

Bedding shall be of the type and thickness shown. Initial backfill material shall be placed and compacted with approved tampers to a height of at least one foot above the utility pipe or conduit. The backfill shall be brought up evenly on both sides of the pipe for the full length of the pipe. Care shall be taken to ensure thorough compaction of the fill under the haunches of the pipe.

3.2.1.4 Final Backfill

The remainder of the trench, except for special materials for roadways, railroads and airfields, shall be filled with satisfactory material. Backfill material shall be placed and compacted as follows:

a. Roadways: Backfill shall be placed up to the elevation at which the requirements in Section 02300 EARTHWORK control. Water flooding or jetting methods of compaction will not be permitted.

b. Sidewalks, Turfed or Seeded Areas and Miscellaneous Areas: Backfill shall be deposited in layers of a maximum of 300 mm loose thickness, and compacted to 90 percent maximum density for cohesive soils and 95 percent maximum density for cohesionless soils. Compaction by water flooding or jetting will not be permitted. This requirement shall also apply to all other areas not specifically designated above.

3.2.2 Backfill for Appurtenances

After the manhole, catchbasin, inlet, or similar structure has been constructed and the concrete has been allowed to cure for 14 days, backfill shall be placed in such a manner that the structure will not be damaged by the shock of falling earth. The backfill material shall be deposited and compacted as specified for final backfill, and shall be brought up evenly on all sides of the structure to prevent eccentric loading and excessive stress.

3.3 SPECIAL REQUIREMENTS

Special requirements for both excavation and backfill relating to the specific utilities are as follows:

3.3.1 Gas Distribution

Trenches shall be excavated to a depth that will provide not less than 450 mm of cover in rock excavation and not less than 600 mm of cover in other excavation.

3.3.2 Water Lines

Trenches shall be of a depth to provide a minimum cover of 1 m (3 ft) in areas subject to vehicular traffic and .70m (2.5 ft) meters in all other areas from the existing ground surface, or from the indicated finished grade, whichever is lower, to the top of the pipe.

3.3.3 Heat Distribution System

Initial backfill material shall be free of stones larger than 6.3 mm in any dimension.

3.3.4 Electrical Distribution System

Direct burial cable and conduit or duct line shall have a minimum cover of 600 mm from the finished grade, unless otherwise indicated. Special trenching requirements for direct-burial electrical cables and conduits are specified in Section 16375 ELECTRICAL DISTRIBUTION SYSTEM, UNDERGROUND.

3.3.5 Plastic Marking Tape

Warning tapes shall be installed directly above the pipe, at a depth of 450 millimeters below finished grade unless otherwise shown.

3.4 TESTING

Testing shall be the responsibility of the Contractor and shall be performed at no additional cost to the Government.

3.4.1 Testing Facilities

Tests shall be performed by an approved commercial testing laboratory or may be tested by facilities furnished by the Contractor. No work requiring testing will be permitted until the facilities have been inspected and approved by the Contracting Officer. The first inspection shall be at the expense of the Government. Cost incurred for any subsequent inspection required because of failure of the first inspection will be charged to the Contractor.

3.4.2 Testing of Backfill Materials

Characteristics of backfill materials shall be determined in accordance with particle size analysis of soils soils ASTM C 117 and ASTM C 136 or ASTM D 422 as applicable, moisture-density relations of soils ASTM D 1557 (see Degree of Compaction). A minimum of one particle size analysis and one moisture-density relation test shall be performed on each different type of material used for bedding and backfill.

3.4.3 Field Density Tests

Tests shall be performed in sufficient numbers to ensure that the specified density is being obtained. A minimum of one field density test per lift of backfill for every 30 meters of installation shall be performed. One moisture density relationship shall be determined for every 1500 cubic meters of material used. Field in-place density shall be determined in accordance with ASTM D 1556 or ASTM D 2922. When ASTM D 2922 is used, the calibration curves shall be checked and adjusted using the sand cone method as described in paragraph Calibration of the ASTM publication. ASTM D 2922 results in a wet unit weight of soil and when using this method, ASTM D 3017 shall be used to determine the moisture content of the soil. The calibration curves furnished with the moisture gauges shall be checked along with density calibration checks as described in ASTM D 3017. The calibration checks of both the density and moisture gauges shall be made at the beginning of a job, on each different type of material encountered, at intervals as directed by the Contracting Officer. Copies of calibration curves, results of calibration tests, and field and laboratory density tests shall be furnished to the Contracting Officer, within 24 hours of the conclusion of the tests. Trenches improperly compacted shall be reopened to the depth directed, then refilled and compacted to the density specified at no additional cost to the Government.

3.4.4 Displacement of Sewers

After other required tests have been performed and the trench backfill compacted to 600 mm (2 ft) above the top of the pipe, the pipe shall be inspected to determine whether significant displacement has occurred. This inspection shall be conducted in the presence of the Contracting Officer. Pipe sizes larger than 900 mm (36 inches) shall be entered and examined, while smaller diameter pipe shall be inspected by shining a light or laser between manholes or manhole locations, or by the use of television cameras passed through the pipe. If, in the judgement of the Contracting Officer, the interior of the pipe shows poor alignment or any other defects that would cause improper functioning of the system, the defects shall be remedied as directed at no additional cost to the Government.

Contractor shall ensure that the final invert slope of all sewer pipes does not deviate from the specified slope by more than 0.1%. Any line with questionable slope (per the Contracting Officer) shall be proven adequate by topo surveying points along the sewer line at no additional cost to the Government. All lines which do not meet the required slope (within 0.1%) shall be revised to ensure compliance.

-- End of Section --

EXCAVATION PERMIT
U.S. ARMY GARRISON, HAWAII
September 1999

Date Prepared:_____

1. General Information (To be completed by contractor/unit):

   a. Contractor/Unit: _____
   b. Phone No.: _____
   c. Installation/Loc. of Excavation:_____
   d. Project Title:_____
   e. Contract Number:_____

2. Telephone, Cable, Communication, Gas, Utility Coordination:

The Contractor/Unit shall verify and coordinate all underground utilities prior to any excavation work with the following maintenance and service departments. Maintenance or service department must sign on approval line or attach document verifying that they reviewed and agree to excavation as noted above.

a. AT&T (HITS), 3375 Kuapaka Street Suite D120. Bob Taylor, 837-1498

Remarks:_____
Approve: _____ Disapprove: _____ Date: _____

B Verizon., Permit Section. 3239 Ualena St, 3rd Floor. 840-1444

Remarks:_____
_____
Approve: _____ Disapprove: _____ Date: _____

c. Oceanic Cable, Engineering and Construction Div. 200 Akamainui St. (Mililani Tech Park). 625-8570. (Bus. Hrs: Mon.-Fri. 0800-1430 hrs.)

Remarks:_____
_____
Approve: _____ Disapprove: _____ Date: _____

d. Sprint, SB Building T697 McCornack Rd. (Field Office). Robert Holguin,674-4511.

Remarks:_____
_____
Approve: _____ Disapprove: _____ Date: _____

e. Infrastructure Management System (Telephone, Data/LAN). EMC, OSPG, Bldg 122, FS. 438-8056. (Complete A, B, C, and D first)

Remarks:_____

_____

Approve: _____ Disapprove: _____ Date: _____

f. BHP Gas Company, Locating Utility Services. 515 Kamakee St. 594-5575.

Remarks:_____

_____

Approve: _____ Disapprove: _____ Date: _____

3. Directorate of Public Works. Engineering Division. WAAF 113.

The Contractor/Unit shall perform a general site survey and locate all utilities within the effected area prior to any excavation. The contractor/unit shall verify that there are no known existing utilities in question for the affected area. All utilities that are not shown on the plans, but have been located in the field shall be shown on the construction as-built drawings. The contractor shall verify that all water, sewer, electrical, and drainage utilities have been identified. If any questions arise, the contractor/unit shall contact the undersigned.

The equipment operator shall closely monitor the excavated material for significant changes in color, size (gradation), and type of material. Such changes may indicate the presence of an unmarked utility. If such changes are noted, the contractor/unit shall cease all excavation by equipment, and probe by hand. If any questions arise, the contractor/unit shall contact the undersigned.

Remarks:_____

_____

Approve: _____ Disapprove: _____ Date:_____

Rod H. Oshiro
Structural Engineer
DPW 656-2942 ext. 3029

4. The contractor/unit shall submit a completed form to the contracting officer assigned to this project prior to any excavation. The contractor/unit shall maintain this permit on site at all times during excavation. This application becomes a certified excavation permit after all utility agencies have approved the appropriate sections and the contracting officer or project manager has signed below.

Completed Permit Application Received By:

_____

Contracting Officer / Project Manager Date

SECTION TABLE OF CONTENTS

DIVISION 02 - SITE WORK

SECTION 02510

WATER DISTRIBUTION SYSTEM

PART 1 GENERAL

1.1 REFERENCES
1.2 PIPING
1.2.1 Service Lines
1.2.2 Distribution Lines 80 mm (3 Inches) or Larger
1.2.3 Plastic Piping System
1.2.4 Excavation, Trenching, and Backfilling
1.3 MANUFACTURER'S REPRESENTATIVE
1.4 SUBMITTALS
1.5 HANDLING
1.5.1 Polyethylene (PE) Pipe Fittings and Accessories
1.5.2 Miscellaneous Plastic Pipe and Fittings

PART 2 PRODUCTS

2.1 PIPE
2.1.1 Reinforced and Prestressed Concrete Pipe
2.1.2 Plastic Pipe
2.1.2.1 PE Plastic Pipe
2.1.2.2 PVC Plastic Pipe
2.1.3 Reinforced Plastic Mortar Pressure (RPMP) Pipe
2.1.4 Reinforced Thermosetting Resin Pipe (RTRP)
2.1.4.1 RTRP-I
2.1.4.2 RTRP-II
2.1.5 Ductile-Iron Pipe
2.1.6 Copper Tubing
2.2 FITTINGS AND SPECIALS
2.2.1 Reinforced Concrete Pipe System
2.2.2 PVC Pipe System
2.2.3 RTRP and RPMP Pipe
2.2.4 Ductile-Iron Pipe System
2.2.5 Copper Tubing System
2.3 JOINTS
2.3.1 Gaskets for Reinforced Concrete Pipe
2.3.2 Plastic Pipe Jointing
2.3.2.1 PE Pipe
2.3.2.2 PVC Pipe
2.3.2.3 PVCO Pipe
2.3.3 RPMP Pipe
2.3.4 RTRP Pipe
2.3.4.1 RTRP-I, Grade 1 and 2
2.3.4.2 RTRP-II, Grade 1 and 2
2.3.5 Ductile-Iron Pipe Jointing
2.3.6 Isolation Joints
2.3.7 Copper Tubing Jointing

2.4 VALVES
2.4.1 Check Valves
2.4.2 Gate Valves
2.4.3 Pressure Reducing Valves
2.4.4 Vacuum and Air Relief Valves
2.4.5 Indicator Post for Valves
2.5 VALVE BOXES
2.6 VALVE MANHOLES
2.7 FIRE HYDRANTS
2.8 MISCELLANEOUS ITEMS
2.8.1 Service Clamps
2.8.2 Corporation Stops
2.8.3 Goosenecks
2.8.4 Service Stops
2.8.5 Tapping Sleeves
2.8.6 Service Boxes
2.8.7 Disinfection
2.8.8 Meters
2.8.8.1 Vertical Turbine Type
2.8.9 Meter Boxes

PART 3 EXECUTION

3.1 INSTALLATION
3.1.1 Cutting of Pipe
3.1.2 Adjacent Facilities
3.1.2.1 Sewer Lines
3.1.2.2 Water Lines
3.1.2.3 Copper Tubing Lines
3.1.2.4 Nonferrous Metallic Pipe
3.1.2.5 Casing Pipe
3.1.2.6 Structures
3.1.3 Joint Deflection
3.1.3.1 Allowable for Reinforced Concrete Pipe
3.1.3.2 Offset for Flexible Plastic Pipe
3.1.3.3 Allowable for Ductile-Iron Pipe
3.1.4 Placing and Laying
3.1.4.1 Reinforced Concrete Pipe Installation
3.1.4.2 Plastic Pipe Installation
3.1.4.3 Piping Connections
3.1.4.4 Penetrations
3.1.4.5 Flanged Pipe
3.1.5 Jointing
3.1.5.1 Reinforced Concrete Pipe Requirements
3.1.5.2 PE Pipe Requirements
3.1.5.3 PVC Plastic Pipe Requirements
3.1.5.4 RTRP I, RTRP II and RPMP Pipe
3.1.5.5 Ductile-Iron Pipe Requirements
3.1.5.6 Isolation Joints and Dielectric Fittings
3.1.5.7 Transition Fittings
3.1.6 Installation of Service Lines
3.1.6.1 Service Lines 50 mm (2 Inches) and Smaller
3.1.6.2 Service Lines Larger than 50 mm (2 Inches)
3.1.6.3 Service Lines for Sprinkler Supplies
3.1.7 Setting of Fire Hydrants, Meters, Valves and Valve Boxes
3.1.7.1 Location of Fire Hydrants
3.1.7.2 Location of Meters
3.1.7.3 Location of Valves
3.1.7.4 Location of Service Boxes

3.1.8 Tapped Tees and Crosses
3.1.9 Hot Tapping
3.1.10 Thrust Restraint
3.1.10.1 Thrust Blocks
3.1.10.2 Restrained Joints
3.2 HYDROSTATIC TESTS
3.2.1 Pressure Test
3.2.2 Leakage Test
3.2.3 Time for Making Test
3.2.4 Concurrent Hydrostatic Tests
3.3 DISINFECTION
3.3.1 Bacteriological Disinfection
3.3.2 Lead Residual
3.4 CLEANUP

-- End of Section Table of Contents --

SECTION 02510

WATER DISTRIBUTION SYSTEM

PART 1 GENERAL

1.1 REFERENCES

The publications listed below form a part of this specification to the extent referenced. The publications are referred to in the text by basic designation only.

AMERICAN SOCIETY FOR TESTING AND MATERIALS (ASTM)

ASTM B 88	(1996) Seamless Copper Water Tube
ASTM C 76	(1995a) Reinforced Concrete Culvert, Storm Drain, and Sewer Pipe
ASTM C 76M	(1996) Reinforced Concrete Culvert, Storm Drain, and Sewer Pipe (Metric)
ASTM D 1599	(1988; R 1995) Short-Time Hydraulic Failure Pressure of Plastic Pipe, Tubing, and Fittings
ASTM D 1784	(1996) Rigid Poly(Vinyl Chloride) (PVC) Compounds and Chlorinated Poly(Vinyl Chloride) (CPVC) Compounds
ASTM D 1785	(1996a) Poly(Vinyl Chloride) (PVC) Plastic Pipe, Schedules 40, 80, and 120
ASTM D 2241	(1996a) Poly(Vinyl Chloride) (PVC) Pressure-Rated Pipe (SDR Series)
ASTM D 2464	(1996a) Threaded Poly(Vinyl Chloride) (PVC) Plastic Pipe Fittings, Schedule 80
ASTM D 2466	(1996a) Poly(Vinyl Chloride) (PVC) Plastic Pipe Fittings, Schedule 40
ASTM D 2467	(1996a) Poly(Vinyl Chloride) (PVC) Plastic Pipe Fittings, Schedule 80
ASTM D 2564	(1996a) Solvent Cements for Poly(Vinyl Chloride) (PVC) Plastic Piping Systems
ASTM D 2657	(1996) Heat Fusion Joining Polyolefin Pipe and Fittings
ASTM D 2774	(1994) Underground Installation of Thermoplastic Pressure Piping

ASTM D 2855	(1996) Making Solvent-Cemented Joints with Poly(Vinyl Chloride) (PVC) Pipe and Fittings
ASTM D 2996	(1995) Filament-Wound "Fiberglass" (Glass-Fiber-Reinforced Thermosetting-Resin) Pipe
ASTM D 2997	(1995) Centrifugally Cast "Fiberglass" (Glass-Fiber-Reinforced-Thermosetting-Resin) Pipe
ASTM D 3139	(1996a) Joints for Plastic Pressure Pipes Using Flexible Elastomeric Seals
ASTM D 3839	(1994a) Underground Installation of "Fiberglass" (Glass-Fiber-Reinforced Thermosetting Resin) Pipe
ASTM F 477	(1995) Elastomeric Seals (Gaskets) for Joining Plastic Pipe

AMERICAN SOCIETY OF MECHANICAL ENGINEERS (ASME)

ASME B1.20.1	(1983; R 1992) Pipe Threads, General Purpose (Inch)
ASME B16.1	(1989) Cast Iron Pipe Flanges and Flanged Fittings
ASME B16.26	(1988) Cast Copper Alloy Fittings for Flared Copper Tubes

AMERICAN WATER WORKS ASSOCIATION (AWWA)

AWWA B300	(1992) Hypochlorites
AWWA B301	(1992) Liquid Chlorine
AWWA C104	(1995) Cement-Mortar Lining for Ductile-Iron Pipe and Fittings for Water
AWWA C105	(1993) Polyethylene Encasement for Ductile-Iron Pipe Systems
AWWA C110	(1993) Ductile-Iron and Gray-Iron Fittings, 3 In. Through 48 In. (75# mm through 1200# mm), for Water and Other Liquids
AWWA C111	(1995) Rubber-Gasket Joints for Ductile-Iron Pressure Pipe and Fittings
AWWA C115	(1994) Flanged Ductile-Iron Pipe With Ductile-Iron or Gray-Iron Threaded Flanges
AWWA C151	(1996) Ductile-Iron Pipe, Centrifugally Cast, for Water or Other Liquids

AWWA C153	(1994; Errata Nov 1996) Ductile-Iron Compact Fittings, 3 In. Through 24 In. (76 mm through 610 mm) and 54 In. through 64 In. (1,400 mm through 1,600 mm) for Water Service Liquids
AWWA C300	(1989) Reinforced Concrete Pressure Pipe, Steel-Cylinder Type, for Water and Other Liquids
AWWA C301	(1992) Prestressed Concrete Pressure Pipe, Steel-Cylinder Type, for Water and Other Liquids
AWWA C303	(1995) Concrete Pressure Pipe, Bar-Wrapped, Steel Cylinder Type
AWWA C500	(1993; C500a) Metal-Sealed Gate Valves for Water Supply Service
AWWA C503	(1988) Wet-Barrel Fire Hydrants
AWWA C509	(1994) Resilient-Seated Gate Valves for Water Supply Service
AWWA C600	(1993) Installation of Ductile-Iron Water Mains and Their Appurtenances
AWWA C606	(1987) Grooved and Shouldered Joints
AWWA C651	(1992) Disinfecting Water Mains
AWWA C701	(1988) Cold-Water Meters - Turbine Type, for Customer Service
AWWA C707	(1982; R 1992) Encoder-Type Remote-Registration Systems for Cold-Water Meters
AWWA C800	(1989) Underground Service Line Valves and Fittings
AWWA C900	(1989; C900a) Polyvinyl Chloride (PVC) Pressure Pipe, 4 In. Through 12 In., for Water Distribution
AWWA C901	(1996) Polyethylene (PE) Pressure Pipe and Tubing, 1/2 In. Through 3 In., for Water Service
AWWA C905	(1988) Polyvinyl Chloride (PVC) Water Transmission Pipe, Nominal Diameters 14 In. Through 36 In.
AWWA C950	(1995) Fiberglass Pressure Pipe
AWWA M23	(1980) Manual: PVC Pipe - Design and Installation

DUCTILE IRON PIPE RESEARCH ASSOCIATION (DIPRA)

DIPRA-01	(1997) Thrust Restraint Design for Ductile Iron Pipe

MANUFACTURERS STANDARDIZATION SOCIETY OF THE VALVE AND FITTINGS INDUSTRY (MSS)

MSS SP-80	(1997) Bronze Gate, Globe, Angle and Check Valves

NATIONAL FIRE PROTECTION ASSOCIATION (NFPA)

NFPA 24	(1995) Installation of Private Fire Service Mains and Their Appurtenances
NFPA 49	(1994) Hazardous Chemicals Data
NFPA 325-1	(1994) Fire Hazard Properties of Flammable Liquids, Gases, and Volatile Solids
NFPA 704	(1996) Identification of the Fire Hazards of Materials for Emergency Response

NSF INTERNATIONAL (NSF)

NSF ANSI/NSF 14	(1996) Plastics Piping Components and Related Materials

STEEL STRUCTURES PAINTING COUNCIL (SSPC)

SSPC Paint 21	(1991) White or Colored Silicone Alkyd Paint
SSPC Paint 25	(1991) Red Iron Oxide, Zinc Oxide, Raw Linseed Oil and Alkyd Primer (Without Lead and Chromate Pigments)

1.2 PIPING

This section covers water distribution and service lines, and connections to building service at a point approximately 1.5 m (5 feet) outside buildings and structures to which service is required. The Contractor shall have a copy of the manufacturer's recommendations for each material or procedure to be utilized available at the construction site at all times.

1.2.1 Service Lines

Piping for water service lines less than 80 mm (3 inches) in diameter shall be polyvinyl chloride (PVC) plastic, Oriented PVC plastic polyethylene, or copper tubing, unless otherwise shown or specified. Piping for water service lines 80 mm (3 inches) and larger shall be ductile iron, polyvinyl chloride (PVC) plastic, filament-wound or centrifugally cast reinforced thermosetting resin or reinforced plastic mortar pressure pipe, unless otherwise shown or specified.

1.2.2 Distribution Lines 80 mm (3 Inches) or Larger

Piping for water distribution lines 80 mm (3 inches) or larger shall be

ductile iron, polyvinyl chloride (PVC) through 320 mm (12 inch) nominal diameter plastic, Oriented PVC plastic filament-wound or centrifugally cast reinforced thermosetting resin, reinforced plastic mortar pressure pipe, or reinforced concrete, unless otherwise shown or specified. For water reservoir project, piping shall be ductile iron.

1.2.3 Plastic Piping System

Plastic piping system components (PVC, polyethylene, thermosetting resin and reinforced plastic mortar pressure) intended for transportation of potable water shall comply with NSF ANSI/NSF 14 and be legibly marked with their symbol.

1.2.4 Excavation, Trenching, and Backfilling

Excavation, trenching, and backfilling shall be in accordance with the applicable provisions of Section 02316 EXCAVATION, TRENCHING, AND BACKFILLING FOR UTILITIES SYSTEMS, except as modified herein.

1.3 MANUFACTURER'S REPRESENTATIVE

The Contractor shall have a manufacturer's field representative present at the jobsite during the installation and testing of PE, RTRP, and/or RPMP pipe to provide technical assistance and to verify that the materials are being installed in accordance with the manufacturer's prescribed procedures. When the representative feels that the Contractor is installing and testing the PE, RTRP, and/or RPMP pipe in a satisfactory manner, certification shall be written to note which individuals employed by the Contractor are capable of properly installing the pipe. The field representative shall advise the Contractor of unsatisfactory conditions immediately when they occur. Such conditions include improper diameter of pipe ends, damaged interior liner, poorly prepared joints, improper curing of joints, moving pipe before joints are cured, bending pipe to follow abrupt changes in trench contours, leaving pipe ends open in trench overnight, not properly drying joints after rain storms, exceeding effective adhesive life, sharp objects in trench bed, backfill that could damage pipe, improper procedure for concrete encasement of pipe, omission of thrust blocks at changes in direction or any other condition which could have an adverse effect on the satisfactory completion and operation of the piping system.

1.4 SUBMITTALS

Government approval is required for submittals with a "GA" designation; submittals having an "FIO" designation are for information only. The following shall be submitted in accordance with Section 01330 SUBMITTAL PROCEDURES:

SD-06 Instructions

Installation; FIO.

The manufacturer's recommendations for each material or procedure to be utilized.

SD-08 Statements

Waste Water Disposal Method; FIO.

The method proposed for disposal of waste water from hydrostatic tests and disinfection, prior to performing hydrostatic tests.

Satisfactory Installation; FIO.

A statement signed by the principal officer of the contracting firm stating that the installation is satisfactory and in accordance with the contract drawings and specifications, and the manufacturer's prescribed procedures and techniques, upon completion of the project and before final acceptance.

SD-09 Reports

Bacteriological Disinfection; FIO.

Test results from commercial laboratory verifying disinfection.

SD-13 Certificates

Manufacturer's Representative; FIO.

The name and qualifications of the manufacturer's representative and written certification from the manufacturer that the representative is technically qualified in all phases of PE, RTRP, and/or RPMP pipe laying and jointing and experienced to supervise the work and train the Contractor's field installers, prior to commencing installation.

Installation; FIO.

A statement signed by the manufacturer's field representative certifying that the Contractor's personnel are capable of properly installing the pipe on the project.

Meters; FIO.

Manufacturer's certificate stating that each meter furnished has been tested for accuracy of registration and compliance with the accuracy and capacity requirements of the appropriate AWWA standard.

1.5 HANDLING

Pipe and accessories shall be handled to ensure delivery to the trench in sound, undamaged condition, including no injury to the pipe coating or lining. If the coating or lining of any pipe or fitting is damaged, the repair shall be made by the Contractor in a satisfactory manner, at no additional cost to the Government. No other pipe or material shall be placed inside a pipe or fitting after the coating has been applied. Pipe shall be carried into position and not dragged. Use of pinch bars and tongs for aligning or turning pipe will be permitted only on the bare ends of the pipe. The interior of pipe and accessories shall be thoroughly cleaned of foreign matter before being lowered into the trench and shall be kept clean during laying operations by plugging or other approved method. Before installation, the pipe shall be inspected for defects. Material found to be defective before or after laying shall be replaced with sound material without additional expense to the Government. Rubber gaskets that are not to be installed immediately shall be stored in a cool and dark place.

1.5.1 Polyethylene (PE) Pipe Fittings and Accessories

PE pipe, fittings, and accessories shall be handled in conformance with AWWA C901.

1.5.2 Miscellaneous Plastic Pipe and Fittings

Polyvinyl Chloride (PVC), Reinforced Thermosetting Resin Pipe (RTRP), and Reinforced Plastic Mortar Pressure (RPMP) pipe and fittings shall be handled and stored in accordance with the manufacturer's recommendations. Storage facilities shall be classified and marked in accordance with NFPA 704, with classification as indicated in NFPA 49 and NFPA 325-1.

PART 2 PRODUCTS

2.1 PIPE

Pipe shall conform to the respective specifications and other requirements specified below.

2.1.1 Reinforced and Prestressed Concrete Pipe

Steel cylinder reinforced concrete pipe shall conform to AWWA C300, AWWA C301, or AWWA C303 and shall be designed to withstand a working pressure of not less than 1.03 MPa (150 psi) unless otherwise shown or specified.

2.1.2 Plastic Pipe

2.1.2.1 PE Plastic Pipe

Pipe, tubing, and heat-fusion fittings shall conform to AWWA C901.

2.1.2.2 PVC Plastic Pipe

Pipe, couplings and fittings shall be manufactured of material conforming to ASTM D 1784, Class 12454B.

a. Pipe Less Than 100 mm (4 inch) Diameter:

(1) Screw-Joint: Pipe shall conform to dimensional requirements of ASTM D 1785 Schedule 80, with joints meeting requirements of 1.03 MPa (150 psi) working pressure, 1.38 MPa (200 psi) hydrostatic test pressure, unless otherwise shown or specified. Pipe couplings when used, shall be tested as required by ASTM D 2464.

(2) Elastomeric-Gasket Joint: Pipe shall conform to dimensional requirements of ASTM D 1785 Schedule 40, with joints meeting the requirements of 1.03 MPa (150 psi) working pressure, 1.38 MPa (200 psi) hydrostatic test pressure, unless otherwise shown or specified, or it may be pipe conforming to requirements of ASTM D 2241, elastomeric joint, with the following applications:

SDR	Maximum Working Pressure MPa	Minimum Hydrostatic Pressure MPa
26	0.689	0.917
21	0.827	1.103
17	1.034	1.379

SDR	Maximum Working Pressure MPa	Minimum Hydrostatic Pressure MPa
13.5	1.379	1.834

(3) Solvent Cement Joint: Pipe shall conform to dimensional requirements of ASTM D 1785 or ASTM D 2241 with joints meeting the requirements of 1.03 MPa (150 psi) working pressure and 1.38 MPa (200 psi) hydrostatic test pressure.

b. Pipe 100 through 300 mm Diameter: Pipe, couplings and fittings shall conform to AWWA C900, Class 150, CIOD pipe dimensions, elastomeric-gasket joint, unless otherwise shown or specified.

c. Pipe 350 through 900 mm Diameter: Pipe shall conform to AWWA C905 unless otherwise shown or specified.

2.1.3 Reinforced Plastic Mortar Pressure (RPMP) Pipe

AWWA C950.

2.1.4 Reinforced Thermosetting Resin Pipe (RTRP)

Pipe shall have a quick-burst strength greater than or equal to four times the normal working pressure of the pipe. The quick-burst strength test shall conform to the requirements of ASTM D 1599.

2.1.4.1 RTRP-I

RTRP-I shall conform to ASTM D 2996, except pipe shall have an outside diameter equal to cast iron outside diameter or standard weight steel pipe. The pipe shall be suitable for a normal working pressure of 1.03 MPa (150 psi) at 23 degrees C. The inner surface of the pipe shall have a smooth uniform continuous resin-rich surface liner conforming to ASTM D 2996.

2.1.4.2 RTRP-II

RTRP-II shall conform to ASTM D 2997. Pipe shall have an outside diameter equal to standard weight steel pipe.

2.1.5 Ductile-Iron Pipe

Ductile-iron pipe shall conform to AWWA C151, working pressure not less than 1.03 MPa (150 psi), unless otherwise shown or specified. Pipe shall be cement-mortar lined in accordance with AWWA C104. Linings shall be standard. When installed underground, pipe shall be encased with 8 mm thick polyethylene in accordance with AWWA C105. Flanged ductile iron pipe with threaded flanges shall be in accordance with AWWA C115.

2.1.6 Copper Tubing

Copper tubing shall conform to ASTM B 88, Type K, annealed.

2.2 FITTINGS AND SPECIALS

2.2.1 Reinforced Concrete Pipe System

Fittings and specials required for closures, curves, bends, branches and connections to valves, pipe, or structures shall be approved by the Contracting Officer and conform to the details furnished by the manufacturer and to AWWA C300, AWWA C301, or AWWA C303, as applicable.

2.2.2 PVC Pipe System

a. For pipe less than 100 mm (4 inch) diameter, fittings for threaded pipe shall conform to requirements of ASTM D 2464, threaded to conform to the requirements of ASME B1.20.1 for use with Schedule 80 pipe and fittings; fittings for solvent cement jointing shall conform to ASTM D 2466 or ASTM D 2467; and fittings for elastomeric-gasket joint pipe shall be iron conforming to AWWA C110 or AWWA C111. Iron fittings and specials shall be cement-mortar lined (standard thickness) in accordance with AWWA C104.

b. For pipe 100 mm (4 inch) diameter and larger, fittings and specials shall be iron, bell end in accordance with AWWA C110, 1.03 MPa (150 psi) pressure rating unless otherwise shown or specified, except that profile of bell may have special dimensions as required by the pipe manufacturer; or fittings and specials may be of the same material as the pipe with elastomeric gaskets, all in conformance with AWWA C900. Iron fittings and specials shall be cement-mortar lined (standard thickness) in accordance with AWWA C104. Fittings shall be bell and spigot or plain end pipe, or as applicable. Ductile iron compact fittings shall be in accordance with AWWA C153.

c. PVC Fittings for PVC pipe up to 200 mm (8 inch) in size shall conform to AWWA C907.

2.2.3 RTRP and RPMP Pipe

Fittings and specials shall be compatible with the pipe supplied. Filament wound or molded fittings up to 150 mm (6 inches) shall conform to AWWA C950. Iron fittings shall be cement-mortar lined in accordance with AWWA C104 and shall conform to AWWA C110 and AWWA C111. Fittings shall be suitable for working and testing pressures specified for the pipe.

2.2.4 Ductile-Iron Pipe System

Fittings and specials shall be suitable for 1.03 MPa (150 psi) pressure rating, unless otherwise specified. Fittings and specials for mechanical joint pipe shall conform to AWWA C110. Fittings and specials for use with push-on joint pipe shall conform to AWWA C110 and AWWA C111. Fittings and specials for grooved and shouldered end pipe shall conform to AWWA C606. Fittings and specials shall be cement-mortar lined (standard thickness) in accordance with AWWA C104. Ductile iron compact fittings shall conform to AWWA C153.

2.2.5 Copper Tubing System

Fittings and specials shall be flared and conform to ASME B16.26.

2.3 JOINTS

2.3.1 Gaskets for Reinforced Concrete Pipe

Rubber-gasket joints shall be of the type using a bell-and-spigot joint design of steel. The gaskets shall conform to AWWA C300, AWWA C301, or AWWA C303, as applicable.

2.3.2 Plastic Pipe Jointing

2.3.2.1 PE Pipe

Joints for pipe fittings and couplings shall be strong tight joints as specified for PE in Paragraph INSTALLATION. Joints connecting pipe of differing materials shall be made in accordance with the manufacturer's recommendation, and as approved by the Contracting Officer.

2.3.2.2 PVC Pipe

Joints, fittings, and couplings shall be as specified for PVC pipe. Joints connecting pipe of differing materials shall be made in accordance with the manufacturer's recommendations, and as approved by the Contracting Officer.

2.3.2.3 PVCO Pipe

Joints shall conform to ASTM D 3139. Elastomeric gaskets shall conform to ASTM F 477.

2.3.3 RPMP Pipe

Joints shall be mechanical or bell and spigot type with elastomeric gasket.

2.3.4 RTRP Pipe

2.3.4.1 RTRP-I, Grade 1 and 2

Joints shall be bell and spigot with elastomeric gasket, mechanical coupling with elastomeric gasket, threaded and bonded coupling, or tapered bell and spigot with compatible adhesive. All RTRP-I materials shall be products of a single manufacturer.

2.3.4.2 RTRP-II, Grade 1 and 2

Joints shall be the bell and spigot type with elastomeric gasket, bell and spigot with adhesive, butt-jointed with adhesive bonded reinforced overlay, mechanical, flanged, threaded or commercially available proprietary joints, provided they are capable of conveying water at the pressure and temperature of the pipe.

2.3.5 Ductile-Iron Pipe Jointing

a. Mechanical joints shall be of the stuffing box type and shall conform to AWWA C111.

b. Push-on joints shall conform to AWWA C111.

c. Rubber gaskets and lubricants shall conform to the applicable requirements of AWWA C111.

2.3.6 Isolation Joints

Isolation joints shall be installed between nonthreaded ferrous and nonferrous metallic pipe, fittings and valves. Isolation joints shall

consist of a sandwich-type flange isolation gasket of the dielectric type, isolation washers, and isolation sleeves for flange bolts. Isolation gaskets shall be full faced with outside diameter equal to the flange outside diameter. Bolt isolation sleeves shall be full length. Units shall be of a shape to prevent metal-to-metal contact of dissimilar metallic piping elements.

a. Sleeve-type couplings shall be used for joining plain end pipe sections. The two couplings shall consist of one steel middle ring, two steel followers, two gaskets, and the necessary steel bolts and nuts to compress the gaskets.

b. Split-sleeve type couplings may be used in aboveground installations when approved in special situations and shall consist of gaskets and a housing in two or more sections with the necessary bolts and nuts.

2.3.7 Copper Tubing Jointing

Joints shall be compression-pattern flared and shall be made with the specified fittings.

2.4 VALVES

2.4.1 Check Valves

Check valves shall be designed for a minimum working pressure of 1.03 MPa (150 psi) or as indicated. Valves shall have a clear waterway equal to the full nominal diameter of the valve. Valves shall open to permit flow when inlet pressure is greater than the discharge pressure, and shall close tightly to prevent return flow when discharge pressure exceeds inlet pressure. The size of the valve, working pressure, manufacturer's name, initials, or trademark shall be cast on the body of each valve. Valves 50 mm (2 inches) and larger shall be outside lever and spring.

Valves larger than 50 mm (2 inches) shall be iron body, bronze mounted, shall have flanged ends, and shall be the non-slam type. Flanges shall be the Class 125 type conforming to ASME B16.1.

2.4.2 Gate Valves

Gate valves shall be designed for a working pressure of not less than 1.03 MPa (150 psi). Valve connections shall be as required for the piping in which they are installed. Valves shall have a clear waterway equal to the full nominal diameter of the valve, and shall be opened by turning counterclockwise. The operating nut or wheel shall have an arrow, cast in the metal, indicating the direction of opening.

a. Valves smaller than 80 mm (3 inches) shall be all bronze and shall conform to MSS SP-80, Type 1, Class 150.

b. Valves 80 mm (3 inches) and larger shall be iron body, bronze mounted, and shall conform to AWWA C500. Flanges shall not be buried. An approved pit shall be provided for all flanged connections.

c. Resilient-Seated Gate Valves: For valves 80 to 300 mm (3 to 12 inches) in size, resilient-seated gate valves shall conform to AWWA C509.

2.4.3 Pressure Reducing Valves

Pressure reducing valves shall maintain a constant downstream pressure regardless of fluctuations in demand. Valves shall be suitable for 105 MPa operating pressure on the inlet side, with outlet pressure set for 70 MPa. The valves shall be of the hydraulically-operated, pilot controlled, globe or angle type, and may be actuated either by diaphragm or piston. The pilot control shall be the diaphragm-operated, adjustable, spring-loaded type, designed to permit flow when controlling pressure exceeds the spring setting. Ends shall be flanged. Valve bodies shall be bronze, cast iron or cast steel with bronze trim. Valve stem shall be stainless steel. Valve discs and diaphragms shall be synthetic rubber. Valve seats shall be bronze. Pilot controls shall be bronze with stainless steel working parts.

2.4.4 Vacuum and Air Relief Valves

Vacuum and air relief valves shall be of the size shown and shall be of a type that will release air and prevent the formation of a vacuum. The valves shall automatically release air when the lines are being filled with water and shall admit air into the line when water is being withdrawn in excess of the inflow. Valves shall be iron body with bronze trim and stainless steel float.

2.4.5 Indicator Post for Valves

Each valve shown on the drawings with the designation "P.I.V." shall be equipped with indicator post conforming to the requirements of NFPA 24. Operation shall be by a wrench which shall be attached to each post.

2.5 VALVE BOXES

Valve boxes shall be cast iron. Cast-iron boxes shall be extension type with slide-type adjustment and with flared base. The minimum thickness of metal shall be 5 mm. The word "WATER" shall be cast in the cover. The box length shall adapt, without full extension, to the depth of cover required over the pipe at the valve location. Cast-iron boxes and covers shall be coated with an approved coal-tar coating compound. Coating shall be bituminous solvent coal tar base applied at approximately 20 mils dry film thickness.

2.6 **VALVE MANHOLES**

Valve manholes shall be constructed at locations indicated or as required above and in accordance with the details shown. Concrete shall have compressive strength of 21 MPa in accordance with Section 03300 CAST-IN-PLACE STRUCTURAL CONCRETE.

2.7 FIRE HYDRANTS

Hydrants shall be wet-barrel type conforming to AWWA C503, with either an automatic breakoff check valve or an auxiliary gate valve on hydrant branch. Hydrants shall have a 150 mm (6 inch) bell connection, two 65 mm (2-1/2 inch) hose connections and one 115 mm (4-1/2 inch) pumper connection. Outlets shall have American National Standard fire-hose coupling threads. Working parts shall be bronze. Design, material, and workmanship shall be equal to the latest stock pattern ordinarily produced by the manufacturer. Hydrants shall be painted with 1 coat of red iron

oxide, zinc oxide primer conforming to SSPC Paint 25 and 2 finish coats of silicone alkyd paint conforming to SSPC Paint 21. Color shall be Norwood Brown. Appropriate quick-coupler for the 115 mm (4 1/2 inch) outlet shall be furnished.

2.8 MISCELLANEOUS ITEMS

2.8.1 Service Clamps

Service clamps shall have a pressure rating not less than that of the pipe to be connected and shall be either the single or double flattened strap type. Clamps shall have a galvanized malleable-iron body with cadmium plated straps and nuts. Clamps shall have a rubber gasket cemented to the body.

2.8.2 Corporation Stops

Corporation stops shall have standard corporation stop thread conforming to AWWA C800 on the inlet end, with flanged joints, compression pattern flared tube couplings, or wiped joints for connections to goosenecks.

2.8.3 Goosenecks

Copper tubing for gooseneck connections shall conform to the applicable requirements of ASTM B 88, Type K, annealed. Length of cable requirement connections shall be in accordance with standard practice.

2.8.4 Service Stops

Service stops shall be water-works inverted-ground-key type, oval or round flow way, tee handle, without drain. Pipe connections shall be suitable for the type of service pipe used. All parts shall be of bronze with female iron-pipe-size connections or compression-pattern flared tube couplings, and shall be designed for a hydrostatic test pressure not less than 1.375 MPa (200 psi).

2.8.5 Tapping Sleeves

Tapping sleeves of the sizes indicated for connection to existing main shall be the cast gray, ductile, or malleable iron, split-sleeve type with flanged or grooved outlet, and with bolts, follower rings and gaskets on each end of the sleeve. Construction shall be suitable for a maximum working pressure of 1.03 MPa. Bolts shall have square heads and hexagonal nuts. Longitudinal gaskets and mechanical joints with gaskets shall be as recommended by the manufacturer of the sleeve. When using grooved mechanical tee, it shall consist of an upper housing with full locating collar for rigid positioning which engages a machine-cut hole in pipe, encasing an elastomeric gasket which conforms to the pipe outside diameter around the hole and a lower housing with positioning lugs, secured together during assembly by nuts and bolts as specified, pretorqued to 67.8 Newton meters (50 foot-pound).

2.8.6 Service Boxes

Service boxes shall be cast iron or concrete and shall be extension service boxes of the length required for the depth of the line, with either screw or slide-type adjustment. The boxes shall have housings of sufficient size to completely cover the service stop or valve and shall be complete with identifying covers. Cast-Iron, Service boxes and covers shall be coated

with coal-tar compound. Coating thickness shall be approximately 20 mils dry film.

2.8.7 Disinfection

Chlorinating materials shall conform to the following:

Chlorine, Liquid: AWWA B301.

Hypochlorite, Calcium and Sodium: AWWA B300.

2.8.8 Meters

Meters shall be the type and size as specified below. Meters furnished and installed shall be supplied by one manufacturer.

2.8.8.1 Vertical Turbine Type

Vertical turbine type meters shall conform to AWWA C701 (Class II). The main casing shall be bronze with stainless steel external fasteners. Registers shall be straight-reading type, shall be permanently sealed and shall read in U.S. gallons. Digital indicator-totalizer shall be sealed and magnetically coupled with the driving mechanism. A leak detector hand shall be provided to indicate very low flow (due to leakage). Connections shall be suitable to the type of pipe and conditions encountered. Register type shall be an encoder-type remote register designed in accordance with AWWA C707. Remote mounting adapter kit with up to 15.24m (50') of cable (see Utility Plan for Remote Sensor location to determine length of cable required) shall be used to connect the water meter to the remote sensor on the building indicated (see Utility Plan for location of water meter & Remote Sensor). Meters shall comply with the accuracy and capacity requirements of AWWA C701.

2.8.9 Meter Boxes

Meter boxes shall be of cast iron or concrete. The boxes shall be of sufficient size to completely enclose the meter and shutoff valve or service stop. Meter boxes set in paved areas subject to vehicular traffic shall be cast iron, or concrete with cast iron lid and cast iron meter reader lid. Boxes set in sidewalks, not subject to vehicular traffic, shall be concrete with cast iron lid and cast iron meter reader lid. Plastic boxes and lids shall not be used. Box height shall extend from invert of the meter to final grade at the meter location. The lid shall have the word "WATER" cast in it.

PART 3 EXECUTION

3.1 INSTALLATION

3.1.1 Cutting of Pipe

Cutting of pipe shall be done in a neat and workmanlike manner without damage to the pipe. Unless otherwise recommended by the manufacturer and authorized by the Contracting Officer, cutting shall be done with an approved type mechanical cutter. Wheel cutter shall be used when practicable. Copper tubing shall be cut square and all burrs shall be removed. Squeeze type mechanical cutters shall not be used for ductile iron.

3.1.2 Adjacent Facilities

3.1.2.1 Sewer Lines

Where the location of the water pipe is not clearly defined in dimensions on the drawings, the water pipe shall not be laid closer horizontally than 3 m from a sewer except where the bottom of the water pipe will be at least 300 mm above the top of the sewer pipe, in which case the water pipe shall not be laid closer horizontally than 1.8 m from the sewer. Where water lines cross under gravity-flow sewer lines, the sewer pipe, for a distance of at least 3 m each side of the crossing, shall be fully encased in concrete or shall be made of pressure pipe with no joint located within 900 mm horizontally of the crossing. Water lines shall in all cases cross above sewage force mains or inverted siphons and shall be not less than 600 mm above the sewer main. Joints in the sewer main, closer horizontally than 900 mm to the crossing, shall be encased in concrete.

3.1.2.2 Water Lines

Water lines shall not be laid in the same trench with sewer lines, gas lines, fuel lines, or electric wiring.

3.1.2.3 Copper Tubing Lines

Copper tubing shall not be installed in the same trench with ferrous piping materials.

3.1.2.4 Nonferrous Metallic Pipe

Where nonferrous metallic pipe, e.g. copper tubing, crosses any ferrous piping material, a minimum vertical separation of 300 mm shall be maintained between pipes.

3.1.2.5 Casing Pipe

Water pipe shall be encased in a sleeve of rigid conduit for the lengths shown. Where sleeves are required, the pipe sleeve shall be reinforced concrete in accordance with ASTM C 76M and , Class V as specified for storm drains in Section 02630 STORM-DRAINAGE SYSTEM. A minimum clearance of at least 50 mm between the inner wall of the sleeve and the maximum outside diameter of the sleeved pipe and joints shall be provided. Sand bedding or suitable pipe support shall be provided for the water pipe through the sleeve.

3.1.2.6 Structures

Where water pipe is required to be installed within 1 m of existing structures, the water pipe shall be sleeved as required in Paragraph "Casing Pipe". The Contractor shall install the water pipe and sleeve ensuring that there will be no damage to the structures and no settlement or movement of foundations or footings.

3.1.3 Joint Deflection

3.1.3.1 Allowable for Reinforced Concrete Pipe

Maximum allowable deflections from a straight line or grade, as required by vertical curves, horizontal curves, or offsets, shall be 5 degrees for reinforced concrete pipe unless a lesser amount is recommended by the

manufacturer. Long radius curves in reinforced concrete pipe shall be formed by straight pipe in which spigot rings are placed on a bevel. Slight deflections may be made by straight pipe, provided that the maximum joint opening caused by such deflection does not exceed the maximum recommended by the pipe manufacturer. Short radius curves and closures shall be formed by shorter lengths of pipe, bevels, or fabricated specials specified.

3.1.3.2 Offset for Flexible Plastic Pipe

Maximum offset in alignment between adjacent pipe joints shall be as recommended by the manufacturer and approved by the Contracting Officer, but shall not exceed 5 degrees.

3.1.3.3 Allowable for Ductile-Iron Pipe

The maximum allowable deflection shall be as given in AWWA C600. If the alignment requires deflection in excess of the above limitations, special bends or a sufficient number of shorter lengths of pipe shall be furnished to provide angular deflections within the limit set forth.

3.1.4 Placing and Laying

Pipe and accessories shall be carefully lowered into the trench by means of derrick, ropes, belt slings, or other authorized equipment. Water-line materials shall not be dropped or dumped into the trench. Abrasion of the pipe coating shall be avoided. Except where necessary in making connections with other lines or as authorized by the Contracting Officer, pipe shall be laid with the bells facing in the direction of laying. The full length of each section of pipe shall rest solidly upon the pipe bed, with recesses excavated to accommodate bells, couplings, and joints. Pipe that has the grade or joint disturbed after laying shall be taken up and relaid. Pipe shall not be laid in water or when trench conditions are unsuitable for the work. Water shall be kept out of the trench until joints are complete. When work is not in progress, open ends of pipe, fittings, and valves shall be securely closed so that no trench water, earth, or other substance will enter the pipes or fittings. Where any part of the coating or lining is damaged, the repair shall be made by and at the Contractor's expense in a satisfactory manner. Pipe ends left for future connections shall be valved, plugged, or capped, and anchored, as shown and location suitably staked or marked (as approved by the Contracting Officer).

3.1.4.1 Reinforced Concrete Pipe Installation

Reinforced concrete pipe shall be installed in accordance with recommendations of the pipe manufacturer. Before laying reinforced concrete pipe, the outside surface of the spigot and the inside surface of the bell shall be cleaned and an acceptable vegetable-compound lubricant applied to the inside surface of the bell and to the rubber gasket. Where prescribed by the pipe manufacturer, the gasket shall be placed in the groove on the end of the pipe before the pipe is placed in the trench. After the pipe has been forced together, the position of the rubber gasket shall be checked with a feeler gauge in accordance with the pipe manufacturer's recommendations. Tapping of reinforced concrete cylinder pipe shall be done in accordance with the manufacturer's approved recommendations. Where the manufacturer recommends that the taps be made by attaching the rubber-gasketed saddle to the outside of the pipe using U-bolts, the saddle shall be grouted in if necessary, the mortar coating shall be chipped away, even with the hole in the saddle plate. The exposed

circumferential wires shall be removed and the cylinder and concrete core drilled out, and the steel saddle and U-bolts shall be protected by concrete encasement.

3.1.4.2 Plastic Pipe Installation

RTRP shall be installed in accordance with ASTM D 3839. RPMP shall be installed in accordance with the manufacturer's recommendations. PE Pipe shall be installed in accordance with ASTM D 2774. PVC pipe shall be installed in accordance with AWWA M23.

3.1.4.3 Piping Connections

Where connections are made between new work and existing mains, the connections shall be made by using specials and fittings to suit the actual conditions. When made under pressure, these connections shall be installed using standard methods as approved by the Contracting Officer.

3.1.4.4 Penetrations

Pipe passing through walls of valve pits and structures shall be provided with ductile-iron or Schedule 40 steel wall sleeves. Annular space between walls and sleeves shall be filled with rich cement mortar. Annular space between pipe and sleeves shall be filled with mastic.

3.1.4.5 Flanged Pipe

Flanged pipe shall only be installed above ground or with the flanges in valve pits.

3.1.5 Jointing

3.1.5.1 Reinforced Concrete Pipe Requirements

The inside and outside annular spaces between abutting sections of concrete pipe shall be filled with rich cement mortar in accordance with the pipe manufacturer's recommendations. Excess mortar shall be removed from interior annular spaces, leaving a smooth and continuous surface between pipe sections. Exposed portions of steel joint rings shall be protected from corrosion by a metallic coating or by an approved nonmetallic coating. Rubber gaskets shall be handled, lubricated where necessary, and installed in accordance with the pipe manufacturer's recommendations.

3.1.5.2 PE Pipe Requirements

Jointing shall comply with ASTM D 2657, Technique I-Socket Fusion or Technique II-Butt Fusion, or Technique III - Hot Gas Fusion.

3.1.5.3 PVC Plastic Pipe Requirements

a. Pipe less than 100 mm (4 inch) diameter: Threaded joints shall be made by wrapping the male threads with approved thread tape or applying an approved lubricant, then threading the joining members together. The joint shall be tightened using strap wrenches to prevent damage to the pipe and/or fitting. To avoid excessive torque, joints shall be tightened no more than one thread past hand-tight. Preformed rubber-ring gaskets for elastomeric-gasket joints shall be made in accordance with ASTM F 477 and as specified. Pipe ends for push-on joints shall be beveled to

facilitate assembly and marked to indicate when the pipe is fully seated. The gasket shall be prelubricated to prevent displacement. The gasket and ring groove in the bell or coupling shall match. The manufacturer of the pipe or fitting shall supply the elastomeric gasket. Couplings shall be provided with stops or centering rings to assure that the coupling is centered on the joint. Solvent cement joints shall use sockets conforming to ASTM D 2467. The solvent cement used shall meet the requirements of ASTM D 2564; the joint assembly shall be made in accordance with ASTM D 2855 and the manufacturer's specific recommendations.

b. Pipe 100 through 300 mm diameter: Joints shall be elastomeric gasket as specified in AWWA C900. Jointing procedure shall be as specified for pipe less than 100 mm (4 inch) diameter with configuration using elastomeric ring gasket.

c. Pipe 350 through 900 mm diameter: Joints shall be elastomeric gasket push-on joints made in accordance with AWWA M23.

3.1.5.4 RTRP I, RTRP II and RPMP Pipe

a. RTRP I: Assembly of the pipe shall be done in conformance with the manufacturer's written instruction and installation procedures. Field joints shall be prepared as specified by the pipe manufacturer. Several pipe joints having interference-fit type couplings may be field bonded and cured simultaneously. However, the pipe shall not be moved and additional joints shall not be made until the previously laid joints are completely cured. Joints not having interference-fit type coupling shall be fitted with a clamp which shall hold the joint rigidly in place until the joint cement has completely cured. The clamps shall have a protective material on the inner surface to prevent damage to the plastic pipe when the clamp is tightened in place. The pipe manufacturer shall provide a device or method to determine when the joint is pulled against the pipe stop. Additionally, the pipe manufacturer shall furnish a gauge to measure the diameter of the spigot ends to ensure the diameter conforms to the tolerances specified by the manufacturer. All pipe ends shall be gauged. Factory certified tests shall have been satisfactorily performed to verify that short-term rupture strength is 10.3 MPa (1,500 psi) or greater when carried out in accordance with ASTM D 1599. At any ambient temperature, field bonded epoxy-cemented joints shall be cured with a self-regulating, thermostatically temperature controlled, electrical heating blanket for the time and temperature recommended by the manufacturer for the applicable size and type of joint, or by an alternate heating method recommended by the manufacturer and approved by the Contracting Officer. The joint sections shall not be moved during heating, or until the joint has cooled to ambient temperature.

b. RTRP II: A reinforced overlay joint shall be used to join sections together through a placement of layers of reinforcement fiberglass roving, mat, tape or fabric thoroughly saturated with compatible catalyzed resin.

c. Fittings and Specials for RTRP and RPMP Pipe: Metal to RTRP and RPMP pipe connections shall be made by bolting steel flanges to RTRP and RPMP pipe flanges. Cast-iron fitting with gasket bell or mechanical joint may be used with RTRP if pipe has cast iron

outside diameter. Steel flanges shall be flat-faced type. Where raised-face steel flanges are used, spacer rings shall be used to provide a flat-face seat for RTRP and RPMP pipe flanges. A full-face Buna "N" gasket 3 mm (1/8 inch) thick with a shore hardness of 50-60 shall be used between all flanged connections. The RTRP and RPMP pipe flange shall have raised sealing rings. Flat washers shall be used under all nuts and bolts on RTRP and RPMP pipe flanges. Bolts and nuts shall be of noncorrosive steel and torqued to not more than 135 Newton meters. Flanges shall not be buried. A concrete pit shall be provided for all flanged connections.

3.1.5.5 Ductile-Iron Pipe Requirements

Mechanical and push-on type joints shall be installed in accordance with AWWA C600 for buried lines or AWWA C606 for grooved and shouldered pipe above ground or in pits.

3.1.5.6 Isolation Joints and Dielectric Fittings

Isolation joints and dielectric fittings shall be installed in accordance with details specified in paragraph JOINTS. Dielectric unions shall be encapsulated in a field-poured coal-tar covering, with at least 3 mm thickness of coal tar over all fitting surfaces.

3.1.5.7 Transition Fittings

Connections between different types of pipe and accessories shall be made with transition fittings approved by the Contracting Officer.

3.1.6 Installation of Service Lines

Service lines shall include the pipeline connecting building piping to water distribution lines to the connections with the building service at a point approximately 1.5 m outside the building where such building service exists. Where building services are not installed, the Contractor shall terminate the service lines approximately 1.5 m from the site of the proposed building at a point designated by the Contracting Officer. Such service lines shall be closed with plugs or caps. All service stops and valves shall be provided with service boxes. Service lines shall be constructed in accordance with the following requirements:

3.1.6.1 Service Lines 50 mm (2 Inches) and Smaller

Service lines 50 mm (2 inches) and smaller shall be connected to the main by a directly-tapped corporation stop or by a service clamp. A corporation stop and a copper gooseneck shall be provided with either type of connection. Maximum sizes for directly-tapped corporation stops and for outlets with service clamps shall be as in TABLE I. Where 2 or more gooseneck connections to the main are required for an individual service, such connections shall be made with standard branch connections. The total clear area of the branches shall be at least equal to the clear area of the service which they are to supply. Connections to existing PVC pipe shall be made with a double strap service clamp of the size indicated in Table 1.

Service lines 40 mm (1-1/2 inches) and smaller shall have a service stop. Service lines 50 mm (2 inches) in size shall have a gate valve.

TABLE I. SIZE OF CORPORATION STOPS AND OUTLET

Pipe Size mm	Corporation Stops, mm For Ductile-Iron Pipe	Outlets w/Service Clamps, mm Single & Double Strap
80	--	25
100	25	25
150	32	40
200	40	50
250	40	50
300 & larger	50	50

NOTE:

a. Service lines 40 mm (1-1/2 inches) and smaller shall have a service stop.

b. Service lines 50 mm (2 inches) in size shall have a gate valve.

3.1.6.2 Service Lines Larger than 50 mm (2 Inches)

Service lines larger than 50 mm (2 inches) shall be connected to the main by a tapped saddle, tapping sleeve and valve, service clamp or reducing tee, depending on the main diameter and the service line diameter, and shall have a gate valve. Lines 80 mm (3 inches) and larger may use rubber-seated butterfly valves as specified above, or gate valves.

3.1.6.3 Service Lines for Sprinkler Supplies

Water service lines used to supply building sprinkler systems for fire protection shall be connected to the water distribution main in accordance with NFPA 24.

3.1.7 Setting of Fire Hydrants, Meters, Valves and Valve Boxes

3.1.7.1 Location of Fire Hydrants

Fire hydrants shall be located and installed as shown. Each hydrant shall be connected to the main with a 150 mm (6 inch) branch line having at least as much cover as the distribution main. Hydrants shall be set plumb with pumper nozzle facing the roadway, with the center of the lowest outlet not less than 450 mm above the finished surrounding grade, and the operating nut not more than 1.2 m above the finished surrounding grade. Except where approved otherwise, the backfill around hydrants shall be thoroughly compacted to the finished grade immediately after installation to obtain beneficial use of the hydrant as soon as practicable. The hydrant shall be set upon a slab of concrete not less than 100 mm thick and 400 mm square.

3.1.7.2 Location of Meters

Meters and meter boxes shall be installed at the locations shown on the drawings. The meters shall be centered in the boxes to allow for reading and ease of removal or maintenance.

3.1.7.3 Location of Valves

After delivery, valves, including those in hydrants shall have the interiors cleaned of all foreign matter before installation. Stuffing boxes shall be tightened and hydrants and valves shall be fully opened and fully closed to ensure that all parts are in working condition. Check, pressure reducing, vacuum, and air relief valves shall be installed in valve pits. Valves and valve boxes shall be installed where shown or specified, and shall be set plumb. Valve boxes shall be centered on the valves. Boxes shall be installed over each outside gate valve unless otherwise shown. Where feasible, valves shall be located outside the area of roads and streets. Earth fill shall be tamped around each valve box or pit to a distance of 1.2 m on all sides of the box, or the undisturbed trench face if less than 1.2 m.

3.1.7.4 Location of Service Boxes

Where water lines are located below paved streets having curbs, the boxes shall be installed directly back of the curbs. Where no curbing exists, service boxes shall be installed in accessible locations, beyond the limits of street surfacing, walks and driveways.

3.1.8 Tapped Tees and Crosses

Tapped tees and crosses for future connections shall be installed where shown.

3.1.9 Hot Tapping

Hot tapping or pressure tapping shall be as indicated on drawings. See information on attached to the end of this section.

3.1.10 Thrust Restraint

Plugs, caps, tees and bends deflecting 11.25 degrees or more, either vertically or horizontally, on waterlines 100 mm (4 inches) in diameter or larger, and fire hydrants shall be provided with thrust restraints. Valves 150 mm (6 inches) and larger shall be provided with thrust blocking to prevent movement, except thrust blocking may be omitted for buried valves on concrete pipelines, unless the valve is at or near the end of a buried concrete pipeline. Thrust restraints shall be either thrust blocks or, for ductile-iron pipes, restrained joints.

3.1.10.1 Thrust Blocks

Thrust blocking shall be concrete of a mix not leaner than: 1 cement, 2-1/2 sand, 5 gravel; and having a compressive strength of not less than 14 MPa after 28 days. Blocking shall be placed between solid ground and the hydrant or fitting to be anchored. Unless otherwise indicated or directed, the base and thrust bearing sides of thrust blocks shall be poured directly against undisturbed earth. The sides of thrust blocks not subject to thrust may be poured against forms. The area of bearing shall be as shown or as directed. Blocking shall be placed so that the fitting joints will be accessible for repair. Steel rods and clamps shall be used to anchor vertical down bends into gravity thrust blocks. Steel rods and clamps

shall be protected by galvanizing or by coating with an approved coal-tar compound, approximately 20 mils dry film thickness.

3.1.10.2 Restrained Joints

For ductile-iron pipe, restrained joints shall be designed by the Contractor or the pipe manufacturer in accordance with DIPRA-01.

3.2 HYDROSTATIC TESTS

Where any section of a water line is provided with concrete thrust blocking for fittings or hydrants, the hydrostatic tests shall not be made until at least 5 days after installation of the concrete thrust blocking, unless otherwise approved.

3.2.1 Pressure Test

After the pipe is laid, the joints completed, fire hydrants permanently installed, and the trench partially backfilled leaving the joints exposed for examination, the newly laid piping or any valved section of piping shall, unless otherwise specified, be subjected for 1 hour to a hydrostatic pressure test of 1.38 MPa. Each valve shall be opened and closed several times during the test. Exposed pipe, joints, fittings, hydrants, and valves shall be carefully examined during the partially open trench test. Joints showing visible leakage shall be replaced or remade as necessary. Cracked or defective pipe, joints, fittings, hydrants and valves discovered in consequence of this pressure test shall be removed and replaced with sound material, and the test shall be repeated until the test results are satisfactory. The requirement for the joints to remain exposed for the hydrostatic tests may be waived by the Contracting Officer when one or more of the following conditions is encountered:

a. Wet or unstable soil conditions in the trench.

b. Compliance would require maintaining barricades and walkways around and across an open trench in a heavily used area that would require continuous surveillance to assure safe conditions.

c. Maintaining the trench in an open condition would delay completion of the project.

The Contractor may request a waiver, setting forth in writing the reasons for the request and stating the alternative procedure proposed to comply with the required hydrostatic tests. Backfill placed prior to the tests shall be placed in accordance with the requirements of Section 02316 EXCAVATION, TRENCHING, AND BACKFILLING FOR UTILITIES SYSTEMS.

3.2.2 Leakage Test

Leakage test shall be conducted after the pressure tests have been satisfactorily completed. The duration of each leakage test shall be at least 2 hours, and during the test the water line shall be subjected to not less than 1.38 MPa pressure. Leakage is defined as the quantity of water to be supplied into the newly laid pipe, or any valved or approved section, necessary to maintain pressure within 34.5 kPa (5 psi) of the specified leakage test pressure after the pipe has been filled with water and the air expelled. Piping installation will not be accepted if leakage exceeds the allowable leakage which is determined by the following formula:

L = 0.0001351ND(P raised to 0.5 power)

L = Allowable leakage in gallons per hour
N = Number of joints in the length of pipeline tested
D = Nominal diameter of the pipe in inches
P = Average test pressure during the leakage test, in psi gauge

Should any test of pipe disclose leakage greater than that calculated by the above formula, the defective joints shall be located and repaired until the leakage is within the specified allowance, without additional cost to the Government.

3.2.3 Time for Making Test

Except for joint material setting or where concrete thrust blocks necessitate a 5-day delay, pipelines jointed with rubber gaskets, mechanical or push-on joints, or couplings may be subjected to hydrostatic pressure, inspected, and tested for leakage at any time after partial completion of backfill. Cement-mortar lined pipe may be filled with water as recommended by the manufacturer before being subjected to the pressure test and subsequent leakage test.

3.2.4 Concurrent Hydrostatic Tests

The Contractor may elect to conduct the hydrostatic tests using either or both of the following procedures. Regardless of the sequence of tests employed, the results of pressure tests, leakage tests, and disinfection shall be as specified. Replacement, repair or retesting required shall be accomplished by the Contractor at no additional cost to the Government.

a. Pressure test and leakage test may be conducted concurrently.

b. Hydrostatic tests and disinfection may be conducted concurrently, using the water treated for disinfection to accomplish the hydrostatic tests. If water is lost when treated for disinfection and air is admitted to the unit being tested, or if any repair procedure results in contamination of the unit, disinfection shall be reaccomplished.

3.3 DISINFECTION

3.3.1 Bacteriological Disinfection

Before acceptance of potable water operation, each unit of completed waterline shall be disinfected as prescribed by AWWA C651. Polyvinyl Chloride (PVC) pipe lines shall be chlorinated using only the above specified chlorinating material in solution. The agent shall not be introduced into the line in a dry solid state. From several points in the unit, the Contracting Officer will take samples of water in proper sterilized containers for bacterial examination. The unit will not be accepted until satisfactory bacteriological results have been obtained.

From several points in the unit, the Contractor shall take samples of water in proper sterilized containers for bacterial examination. The unit will not be accepted until satisfactory bacteriological results have been obtained. Chlorinated disinfection water shall not be discharged into any drainage system unless it meets the requirements of the Hawaii Administration Rules Chapter 11-54, Water Quality Standards. The chlorinated disinfection water may be used for watering grassy areas if the

chlorine concentration is reduced to that of drinking water.

3.3.2 Lead Residual

Following the bacteriological disinfection and testing, the system shall be flushed with a sufficient velocity of water and sufficient tests performed at each hot and cold water discharge point until no more than 15 ppb lead residuals remain in the system. All tests and samples shall be performed in accordance with state and, if applicable, Federal regulations. Samples for testing are to be collected after a 6 hour continuous period of no flushing, and will be considered first draw samples. The commercial laboratory shall be certified by the state's approving authority for examination of potable water. Lead residual test results shall be submitted to the Contracting Officer. The system will not be accepted until satisfactory bacteriological results and lead residual test results have been obtained. All flushing and testing for lead residuals, including all costs, are the responsibility of the Contractor.

3.4 CLEANUP

Upon completion of the installation of water lines, and appurtenances, all debris and surplus materials resulting from the work shall be removed.

-- End of Section --

HOT TAPPING OF WATER MAINS:

Hot tapping or pressure tapping is the method of making a connection to existing water piping without interruption to the system. Hot tapping shall be done on all water mains to allow construction of the new mains without interruption of water system service. Hot tapping is also the first procedure in line stopping, where the hole saw is used to make an opening in the pipe, so a line plugging head can be inserted. Hot tapping procedures are as follows:

a. Install appropriate tapping valve with saddle (as recommended by manufacturer) (International Flow Technologies, IFT, or approved equal. All materials left on the line after completion of line-stopping operation (e.g. mechanical joint sleeve & seal saddle, etc.) shall be manufactured of carbon steel with 12 mil fusion epoxy coating. All bolts & nuts shall be 316 stainless steel. Completion plug shall be 304 stainless steel. Tapping valve shall be assembly pressure tested.

b. With valve opened & hot tap completed, coupon or cut portion retained by latches on pilot drill. Pressure is contained within tapping machine.

c. Retract cutter and coupon, close valve. Drain fluid and remove tapping machine. Tapping valve is now ready for the contractors tie-in or IFT line stopping equipment to be inserted.

d. Attach line stopper to temporary valve and open valve. Push line stopper hydraulically or mechanically into line to seal the pipe.

e. A single line stop can be used to stop off and abandon a line without a shutdown. Two line stops can be used to isolate and bypass lines to be replaced.

See attached sketches of line stop fitting installation.

IFT SERIES PIN TYPE LINE STOP FLANGES

150 PSI. WORKING PRESSURE

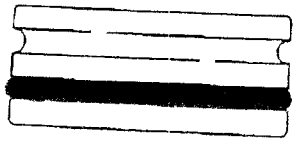

COMPLETION PLUG (SIDE VIEW)

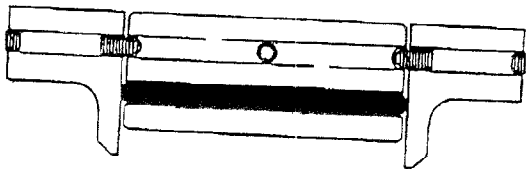

COMPLETION PLUG INSTALLED UNDER PRESSURE (SIDE VIEW)

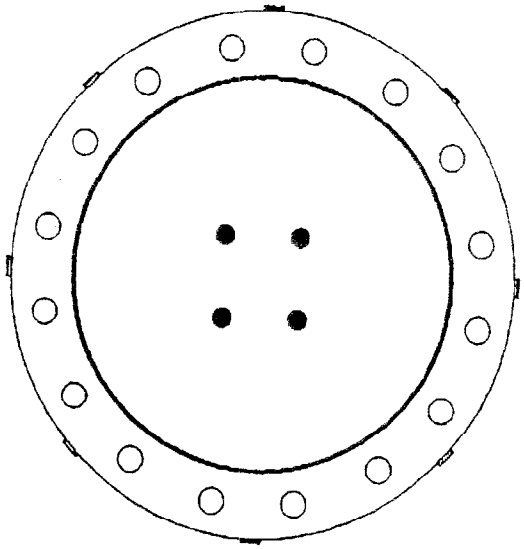

COMPLETION PLUG INSTALLED UNDER PRESSURE (TOP VIEW)

FLANGE SIZE	SIZE OF PINS	NUMBER OF PINS	SIZE OF O-RING
8"	5/8"	6	9/16"
10"	5/8"	6	9/16"
12"	3/4"	6	9/16"
16"	3/4"	8	9/16"
20"	1"	10	5/8"
24"	1"	10	5/8"
30"	1"	14	3/4"
36"	1"	16	3/4"
42"	1 1/4"	18	1"

MATERIAL SPECIFICATIONS:

FLANGE - FORGED STEEL WELD NECK ANSI 150 LB. DRILLING
O-RING - COMPOUNDS FOR USE WITH WATER, SEWAGE, AND NATURAL GAS
SET PINS - ASTM-F-912 ALLOY STEEL HEAT TREATED CLASS 3A THREAD FIT, ROCKWELL HARDNESS C-45-53, CONFORMS TO ASME/ANSI B-18.3

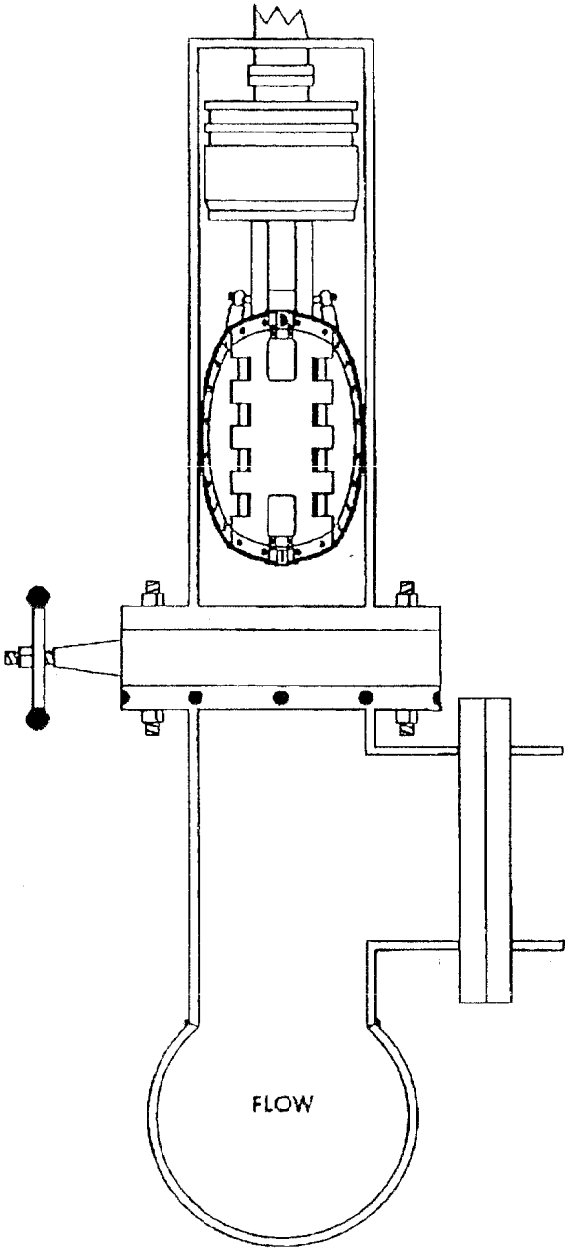

Line stop fitting installed, and hot tapped, line stop head connected to temporary access valve and bypass line connected.

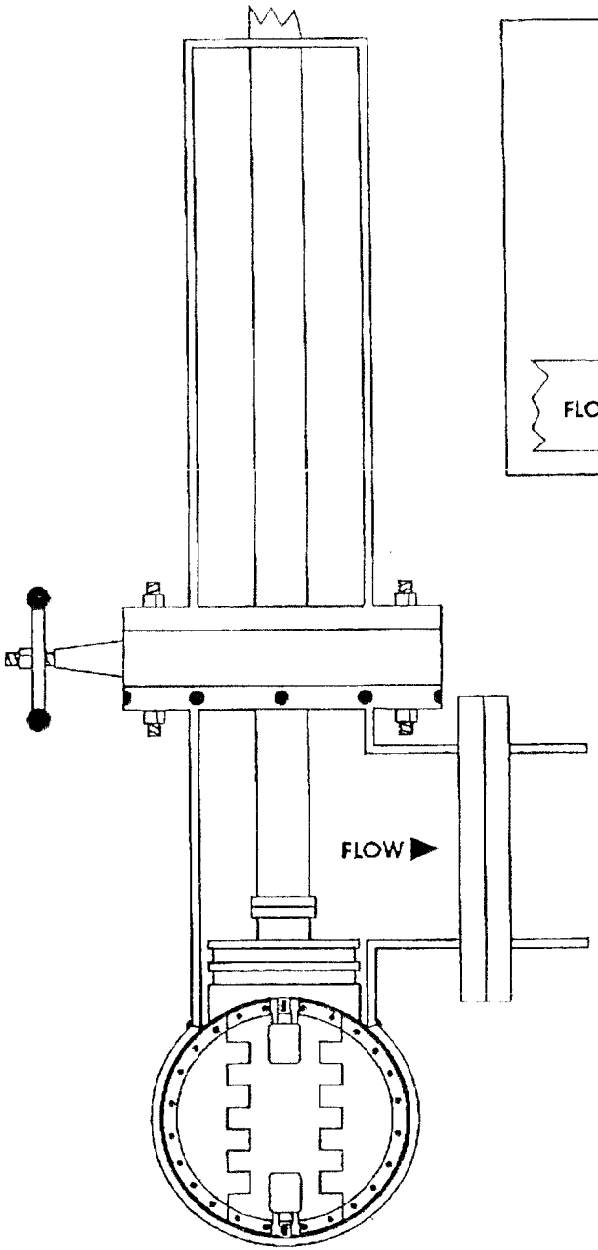

Line stopping head installed, stopping existing flow and re-routing it thru bypass outlet.

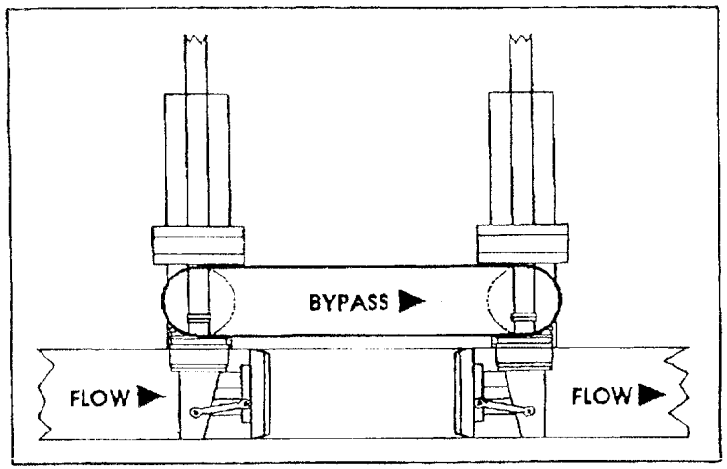

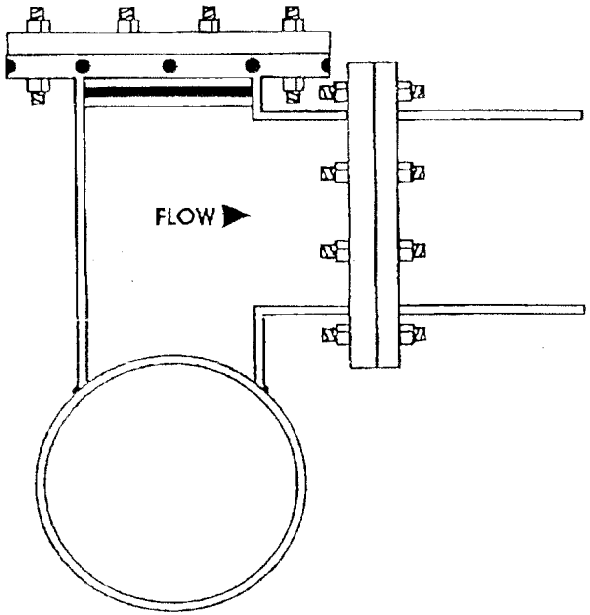

Line is capped, new valve is installed, or modified. The bypass outlet can be removed or left as a permanent bypass. Line stopping equipment removed under pressure.

SECTION TABLE OF CONTENTS

DIVISION 02 - SITE WORK

SECTION 02555

PREFABRICATED UNDERGROUND HEATING/COOLING DISTRIBUTION SYSTEM

PART 1 GENERAL

1.1 REFERENCES
1.2 SYSTEM DESCRIPTION
1.3 SUBMITTALS
1.4 DELIVERY AND STORAGE
1.5 FIELD MEASUREMENTS
1.6 WELDING

PART 2 PRODUCTS

2.1 STANDARD PRODUCTS
2.2 PIPING AND CASING MATERIALS
2.2.1 General
2.2.2 Piping
2.2.2.1 Steel Pipe
2.2.2.2 Copper Tubing
2.2.2.3 Polyvinyl Chloride (PVC) Pipe
2.2.3 Casings
2.2.3.1 Polyvinyl Chloride (PVC) Casing
2.2.3.2 Polyethylene (PE) Casing
2.2.3.3 Reinforced Thermosetting Resin Pipe (RTRP) Casing
2.2.3.4 Polyvinyl Chloride (PVC) Pipe
2.3 PIPING CONNECTIONS
2.3.1 Steel Pipe
2.3.2 Copper Pipe
2.3.3 Plastic Pipe (Joints)
2.3.3.1 General
2.3.3.2 Polyvinyl Chloride (PVC)
2.3.3.3 Reinforced Thermosetting Resin Plastic (RTRP)
2.4 END SEALS
2.4.1 General
2.4.2 Types
2.4.3 Casing and End Seal Testing and Certification
2.5 INSULATION
2.5.1 Factory Applied Insulation
2.5.2 Field Applied Insulation
2.6 CONCRETE VALVE MANHOLES
2.7 PIPING AND EQUIPMENT IN VALVE MANHOLES

PART 3 EXECUTION

3.1 INSTALLATION
3.2 PIPING SYSTEMS
3.2.1 Buried Insulated Systems
3.3 THRUST BLOCKS
3.4 INSTALLATION OF PIPING SYSTEMS

3.4.1 Pitching of Horizontal Piping
3.4.2 Open Ends
3.4.3 Cutting Prefabricated Piping Sections
3.4.4 Joints
3.4.4.1 Welded Joints
3.4.4.2 Threaded Joints
3.4.4.3 Brazed Joints
3.4.4.4 Nonmetallic Pipe Joints
3.4.5 Expansion Loops
3.4.6 Anchors
3.4.7 Field Casing Closures
3.4.8 Underground Warning Tape
3.4.9 Markers for Underground Piping
3.5 EARTHWORK
3.6 ELECTRICAL WORK
3.7 TESTING
3.7.1 Metallic Pipe Welds
3.7.2 Carrier Pipe Cleaning and Testing
3.7.2.1 Cleaning Carrier Pipe
3.7.2.2 Hydrostatic Pressure Cycling and Tests
3.7.2.3 Operational Test
3.7.2.4 Final Hydrostatic Test

-- End of Section Table of Contents --

SECTION 02555

PREFABRICATED UNDERGROUND HEATING/COOLING DISTRIBUTION SYSTEM

PART 1 GENERAL

1.1 REFERENCES

The publications listed below form a part of this specification to the extent referenced. The publications are referred to in the text by basic designation only.

AMERICAN SOCIETY FOR TESTING AND MATERIALS (ASTM)

ASTM A 53	(1996) Pipe, Steel, Black and Hot-Dipped, Zinc-Coated Welded and Seamless
ASTM A 105/A 105M	(1996) Carbon Steel Forgings for Piping Applications
ASTM A 106	(1995) Seamless Carbon Steel Pipe for High-Temperature Service
ASTM A 234/A 234M	(1996b) Piping Fittings of Wrought Carbon Steel and Alloy Steel for Moderate and Elevated Temperatures
ASTM B 88	(1996) Seamless Copper Water Tube
ASTM C 518	(1991) Steady-State Heat Flux Measurements and Thermal Transmission Properties by Means of the Heat Flow Meter Apparatus
ASTM C 591	(1994) Unfaced Preformed Rigid Cellular Polyisocyanurate Thermal Insulation
ASTM D 1248	(1984; R 1989) Polyethylene Plastics Molding and Extrusion Materials
ASTM D 1784	(1996) Rigid Poly(Vinyl Chloride) (PVC) Compounds and Chlorinated Poly(Vinyl Chloride) (CPVC) Compounds
ASTM D 2241	(1996a) Poly(Vinyl Chloride) (PVC) Pressure-Rated Pipe (SDR Series)
ASTM D 2564	(1996a) Solvent Cements for Poly(Vinyl Chloride) (PVC) Plastic Piping Systems
ASTM D 3139	(1996a) Joints for Plastic Pressure Pipes Using Flexible Elastomeric Seals
ASTM D 5686	(1995) "Fiberglass" (Glass-Fiber-Reinforced

	Thermosetting-Resin) Pipe and Pipe Fittings, Adhesive Bonded Joint Type Epoxy Resin, for Condensate Return Lines
ASTM F 477	(1995) Elastomeric Seals (Gaskets) for Joining Plastic Pipe

AMERICAN SOCIETY OF MECHANICAL ENGINEERS (ASME)

ASME B1.20.1	(1983; R 1992) Pipe Threads, General Purpose (Inch)
ASME B16.9	(1993) Factory-Made Wrought Steel Buttwelding Fittings
ASME B16.11	(1991) Forged Fittings, Socket-Welding and Threaded
ASME B31.1	(1995; B31.1a; B31.1b) Power Piping
ASME BPV IX	(1995; Addenda Dec 1995, Dec 1996) Boiler and Pressure Vessel Code; Section IX, Welding and Brazing Qualifications

COPPER DEVELOPMENT ASSOCIATION (CDA)

CDA-02	(1995) Copper Tube Handbook

MANUFACTURERS STANDARDIZATION SOCIETY OF THE VALVE AND FITTINGS INDUSTRY (MSS)

MSS SP-73	(1991; R 1996) Brazing Joints for Copper and Copper Alloy Pressure Fittings

1.2 SYSTEM DESCRIPTION

The system consists of a buried prefabricated chilled water and low temperature hot water distribution system including service connections to a point 150 mm inside of the building. The contract drawings show the specific arrangement of piping, sizes and grades of pipe, and other details. The system is designed for an operating pressure of 660 kPa and an operating temperature of 60 degrees C for hot water and 7 degrees C for chilled water.

1.3 SUBMITTALS

Government approval is required for submittals with a "GA" designation; submittals having an "FIO" designation are for information only. The following shall be submitted in accordance with Section 01330 SUBMITTAL PROCEDURES:

SD-01 Data

Distribution System; FIO.

Data composed of catalog cuts, brochures, circulars, specifications and product data, and printed information in sufficient detail and scope to verify compliance with the requirements of the contract documents.

SD-04 Drawings

Distribution System; FIO.

Detail drawings consisting of fabrication and assembly drawings, for all parts of the work in sufficient detail to check conformity with the requirements of the contract documents, prior to installation. Detail drawings shall also contain complete piping, wiring and schematic diagrams and any other details to demonstrate that the system has been coordinated and will properly function as a unit. Drawings shall show proposed layout, method of compensation for pipe expansion and contraction, anchorage of equipment and appurtenances, and equipment relationship to other parts of the work including clearances required for maintenance and operation. The drawings shall clearly identify any proposed deviations from the requirements of the contract documents. **Drawings shall indicate the inverts of all piping and show all crossovers with other utilities.**

SD-13 Certificates

Distribution System; FIO.

The manufacturer's or system fabricator's written certification stating that the distribution system furnished meets all the requirements of this specification.

Welding Procedures and Operators; FIO.

Prior to welding operations, a copy of qualified procedures and a list of names and identification symbols of qualified welders and welding operators.

SD-19 Operation and Maintenance Manuals

Distribution System; FIO.

Six copies of operation and 6 copies of maintenance manuals for the equipment furnished, 1 complete set prior to performance testing and the remainder upon acceptance. Operation manuals shall detail the step-by-step procedures required for equipment startup, operation, and shutdown. Operation manuals shall include the manufacturer's name, model number, parts list, and brief description of all equipment and their basic operating features. Maintenance manuals shall list routine maintenance procedures, possible breakdowns and repairs, and troubleshooting guides. Maintenance manuals shall include piping and equipment layout and simplified wiring and control diagrams of the equipment system as installed. Manuals shall be approved prior to the field performance testing.

1.4 DELIVERY AND STORAGE

After delivery to the jobsite, all materials and equipment shall be protected from anything which could cause damage to the material or equipment. Pipe shall be sealed at each end to keep the interior clean and free of dirt and debris. Fittings shall be kept together and their interior surfaces shall remain clean. Insulation shall be kept dry and clean.

1.5 FIELD MEASUREMENTS

The Contractor shall become familiar with all details of the work, verify

all dimensions in the field and shall advise the Contracting Officer of any discrepancy before performing the work.

1.6 WELDING

Piping shall be welded in accordance with qualified procedures using performance qualified welders and welding operators. Procedures and welders shall be qualified in accordance with ASME BPV IX. Welding procedures qualified by others, and welders and welding operators qualified by another employer may be accepted as permitted by ASME B31.1. The Contracting Officer shall be notified 24 hours in advance of tests and the tests shall be performed at the work site if practicable. The welder or welding operator shall apply his assigned symbol near each weld he makes as a permanent record. Structural members shall be welded in accordance with Section 05120 STRUCTURAL STEEL.

PART 2 PRODUCTS

2.1 STANDARD PRODUCTS

System components shall be standard products of a manufacturer regularly engaged in the manufacture of the product and shall essentially duplicate items that have been in satisfactory use for at least 2 years prior to bid opening. The system shall be supported by a service organization that is, in the opinion of the Contracting Officer, reasonably convenient to the site.

2.2 PIPING AND CASING MATERIALS

2.2.1 General

Metallic pressure pipe, fittings, and piping accessories shall conform to the requirements of ASME B31.1 and shall be types suitable for the temperature and pressure of the water. Hot water supply and return shall be steel or copper pipe and fittings. **Chilled water supply and return piping shall be PVC.**

2.2.2 Piping

2.2.2.1 Steel Pipe

Piping shall conform to ASTM A 53, Grade B, standard weight, black or to ASTM A 106, Grade B, standard weight.

2.2.2.2 Copper Tubing

Copper tubing shall conform to ASTM B 88, Type K or L.

2.2.2.3 Polyvinyl Chloride (PVC) Pipe

PVC pipe shall conform to ASTM D 2241 with a Standard Thermoplastic Pipe Dimension Ratio (SDR) of 26 and PVC 1120 or 1220 as the material.

2.2.3 Casings

2.2.3.1 Polyvinyl Chloride (PVC) Casing

PVC casings shall conform to ASTM D 1784, Class 12454-B with a minimum thickness equal to the greater of 1/100 the diameter of the casing or 1.50

mm.

2.2.3.2 Polyethylene (PE) Casing

Polyethylene casings shall conform to ASTM D 1248, Type III, Class C, Category 3 or 4, Grade P 34 with thickness as follows:

Casing Diameter (in mm)	Minimum Thickness (in mm)
250 and smaller	3
250 to 450	4
450 to 600	5
over 600	6

2.2.3.3 Reinforced Thermosetting Resin Pipe (RTRP) Casing

RTRP casing shall be of the same material as the pipe, with casing thickness as follows:

Casing Diameter (in mm)	Minimum Thickness (in mm)
200 and smaller	1.2
250	2
300	2.7
350	2.9
400 to 450	3
500	3.2
600	3.9

2.2.3.4 Polyvinyl Chloride (PVC) Pipe

PVC pipe shall conform to ASTM D 2241 with a Standard Thermoplastic Pipe Dimension Ratio (SDR) of 26 and PVC 1120 or 1220 as the material.

2.3 PIPING CONNECTIONS

2.3.1 Steel Pipe

Steel pipe smaller than 20 mm (3/4 inch) may be threaded; otherwise, all steel pipe shall be welded. Steel welding fittings shall conform to the requirements of ASTM A 105/A 105M or ASTM A 234/A 234M. Welding fittings shall also conform to ASME B16.9 for buttweld fittings and ASME B16.11 for socket-weld fittings. Long radius buttwelding elbows conforming to ASME B16.9 shall be used whenever space permits. Pipe Threads shall conform to ASME B1.20.1. Pipe to be threaded shall be schedule 80.

2.3.2 Copper Pipe

Copper pipe shall be brazed or connected using an insulated pipe coupling. Wrought copper or cast copper alloy solder joint pressure fittings shall conform to MSS SP-73. Insulated pipe couplings for copper pipe shall be cast bronze containing an O-ring seal on each end and shall be jacketed and sealed to act as an expansion joint.

2.3.3 **Plastic Pipe (Joints)**

a. Pipe, fittings, flanges, and couplings shall have end connections

of the adhesive bell and spigot type. Threaded piping, including pipe, fittings, flanges, and couplings, will not be permitted.

b. RTRP Piping Sizes: When piping sizes other than 50, 75, 100, 150, and 200 mm (2, 3, 4, 6, and 8 inches) are indicated, the next larger piping size shall be provided. The connecting system piping shall be of the same size or increased to meet the next size of RTRP piping.

2.3.3.1 General

Plastic fittings shall be made of the same type and grade of material as the piping to which they will be connected and shall be furnished by the manufacturer who supplies the pipe. Fittings shall have temperature and pressure ratings not less than those of the connecting piping.

2.3.3.2 Polyvinyl Chloride (PVC)

Polyvinyl chloride (PVC) pipe shall be solvent welded or connected using bell and spigot connections. The solvent used to connect fittings and pipe shall conform to the requirements of ASTM D 2564. Bell and spigot joints utilizing elastomeric seals shall conform to the requirements of ASTM D 3139. The elastomeric seals shall conform to ASTM F 477.

2.3.3.3 Reinforced Thermosetting Resin Plastic (RTRP)

Reinforced thermosetting resin plastic pipe shall be joined using fittings and adhesive furnished by the pipe manufacturer in accordance with ASTM D 5686.

2.4 END SEALS

2.4.1 General

Each preinsulated section of piping shall have a complete sealing of the insulation to provide a permanent water and vapor seal at each end of the preinsulated section of piping. Preinsulated sections of piping modified in the field shall be provided with an end seal which is equivalent to the end seals furnished with the preinsulated section of piping. End seals must be tested and certified in accordance with paragraph Casing and End Seal Testing and Certification.

2.4.2 Types

End seals provided shall be one of the following types:

a. Carrying the outer casing over tapered pipe insulation ends and extending it to the carrier pipe. Sufficient surface bonding area shall be provided between the casing and the carrier pipe.

b. Using specially designed molded caps made of polyethylene or rubber of standard manufactured thickness. A minimum 40 mm surface bonding area shall be provided between the cap and both the casing and carrier pipe.

c. Using elastomer-ring end seals designed and dimensioned to fit in the annular space between the casing and the carrier pipe.

d. Using a waterproof mastic seal vapor barrier over the exposed

insulation ends.

e. Shrink sleeves.

2.4.3 Casing and End Seal Testing and Certification

Testing and certification procedures by an independent testing laboratory shall demonstrate that casings and end seals are capable of resisting penetration of water into the casing and insulation. The test shall be performed on the type of prefabricated system to be furnished. If more than one type of prefabricated system is to be used, then the tests shall be performed on each type. The test shall consist of hot and cold cycle testing followed by immersion in a water filled chamber with a head pressure. The hot and cold cycle testing shall consist of 14 days of temperature cycling. A fluid with a temperature of 5 degrees C shall circulate through the carrier pipe alternating every 24-hours with a fluid with a temperature of 95 degrees C circulating through the carrier pipe for a low temperature hot water or dual temperature service or 24 degrees for a chilled water service. While the hot and cold cycle test is being performed, the test sample is either buried or encased in dry bedding sand with a minimum of 300 mm of sand all around the test sample. The carrier pipe size of the test sample shall be 80 mm (3 inches) in diameter and shall be restrained during the test period. The insulation thickness shall not exceed the maximum thickness provided for the piping in the project. Transition time for temperature cycle testing shall not exceed 15 minutes in going from cold to hot and 30 minutes in going from hot to cold. The fluid in the carrier pipe may be water, oil or heat transfer fluid. Following the hot and cold cycling test, the test sample shall be immersed in a water filled chamber. The pressure on the highest point of the test sample shall not be less than 60 kPa subjected over the entire length of the 2.4 m test sample of prefabricated pipe. The water shall contain a dye penetrant, which will be used to check for end seal leakage. The pressure in the chamber must be held for not less than 48 hours. Upon completion of this pressure test, the test sample shall be cut open. With the use of a light that will readily show the presence of the dye that was in the water, the test sample shall be inspected. Evidence of the dye inside the test sample shall indicate that the end seal is not acceptable and cannot be certified. A pipe manufacturer who has a current Federal Letter of Acceptability for a system furnished under this section will be exempt from the testing specified in this paragraph.

2.5 INSULATION

2.5.1 Factory Applied Insulation

Prefabricated pipe and fittings shall be insulated in the factory. Foam insulation for prefabricated insulated pipe and fittings shall be polyurethane foam meeting the requirements of ASTM C 591 having a density not less than 32 kg per cubic meter. The polyurethane foam shall completely fill the annular space between the carrier pipe and the casing. Insulation thickness shall be a minimum of 20 mm. The insulation thermal conductivity factor shall not exceed the numerical value of 0.02 W/mK (0.15 Btu-inch/square foot-degree F-hour) at 24 degrees C, when tested in accordance with ASTM C 518. Manufacturer shall certify that the insulated pipe is free of insulation voids.

2.5.2 Field Applied Insulation

Field applied insulation for fittings, and field casing closures, if

required, and other piping system accessories shall be polyurethane matching the pipe insulation. Thickness shall match adjacent piping insulation thickness. Buried fittings and accessories shall have field applied polyurethane insulation to match adjacent piping and shall be protected with a covering matching the pipe casing. Shrink sleeves with a minimum thickness of 1.3 mm shall be provided over casing connection joints.

2.6 CONCRETE VALVE MANHOLES

Concrete valve manholes shall be as indicated on the drawings.

2.7 PIPING AND EQUIPMENT IN VALVE MANHOLES

Piping and equipment in valve manholes shall be indicated on the drawings.

PART 3 EXECUTION

3.1 INSTALLATION

For all preinsulated, prefabricated systems, the Contractor shall obtain the services of a trained representative of the pipe system manufacturer to instruct the Contractor's work forces in the installation procedures to ensure that the system is installed in accordance with the manufacturer's published instructions and the plans and specifications. The manufacturer's representative shall be a person who regularly performs such duties for the manufacturer. The Contractor shall furnish the Contracting Officer a list of names of personnel trained and certified by the pipe system manufacturer in the installation of this system. Only personnel whose names appear on the list will be allowed to install the system. The list shall not be more than 1 year old. Buried piping shall be installed per granular termite barrier manufacturer's recommendations.

3.2 PIPING SYSTEMS

3.2.1 Buried Insulated Systems

Buried insulated systems shall consist of carrier pipe, insulation, casing, end seals, fittings and accessories as specified.

3.3 THRUST BLOCKS

Thrust blocks shall be installed at the locations shown or recommended by the pipe system manufacturer. Thrust blocks may not be required on all systems, and the need for thrust blocks shall be as recommended by the system manufacturer. Thrust blocks, if necessary, shall be installed at all changes in direction, changes in size, valves and terminal ends, such as plugs, caps and tees. Thrust blocks shall be concrete having a compressive strength of not less than 14 MPa (2000 psi) after 28 days and shall be in accordance with Section 03300CAST-IN-PLACE STRUCTURAL CONCRETE. Thrust blocks shall be placed between solid ground and the fitting to be anchored. Unless otherwise indicated or directed, the base and the thrust bearing sides of the thrust blocks shall be poured directly against undisturbed earth. The sides of the thrust blocks not subject to thrust may be poured against forms. Thrust blocks shall be placed so that the joints for all fittings will be accessible for repair wherever possible. No pipe joint shall be embedded in concrete unless the assembly has previously been hydrostatically tested. The thrust blocks shall provide for transfer of thrusts and reactions without exceeding the allowable

stress of the concrete and shall be installed in accordance with pipe manufacturer's instructions. In muck or peat, all thrusts shall be resisted by piles or tie rods to solid foundations or by removal of peat or muck which shall be replaced with ballast of sufficient stability to resist thrusts.

3.4 INSTALLATION OF PIPING SYSTEMS

The piping system furnished shall be installed in accordance with the piping system manufacturer's instructions. Piping shall be installed without springing or forcing other than what has been calculated for cold spring. Pipe ends shall have burrs removed by reaming and shall be installed to permit free expansion and contraction without damage to joints or hangers. Nonmetallic pipe cut in the field shall be machined to fit couplings or joints and shall be coated or treated to match standard factory coated ends. Copper tubing shall not be installed in the same trench with ferrous piping materials. When nonferrous metallic pipe (e.g., copper tubing) crosses any ferrous piping material, a minimum vertical separation of 300 mm shall be maintained between pipes. Connections between different types of pipe and accessories shall be made with transition fittings approved by the manufacturer of the piping system.

3.4.1 Pitching of Horizontal Piping

Horizontal piping shall be pitched at a grade of not less than 4 mm in 1 m (1 inch in 20 feet) toward the drain points unless otherwise indicated.

3.4.2 Open Ends

Open ends of pipelines and equipment shall be properly capped or plugged during installation to keep dirt and other foreign matter out of the system.

3.4.3 Cutting Prefabricated Piping Sections

Where prefabricated pipe sections are field cut, new end seals similar to the factory applied end seal shall be provided and installed in accordance with the manufacturer's instructions.

3.4.4 Joints

3.4.4.1 Welded Joints

Welded joints between sections of pipe and between pipe and fittings shall be provided where specified or indicated.

3.4.4.2 Threaded Joints

Threaded joints shall not be used belowground. Joints shall be made tight with polytetrafluoroethylene tape applied to the male threads only. Not more than 3 threads shall show after the joint is made up.

3.4.4.3 Brazed Joints

Brazed joints for copper pipe and fittings shall conform to CDA-02. Brazing alloys melting above 593.3 degrees C (1100 degrees F) shall be utilized.

3.4.4.4 Nonmetallic Pipe Joints

Nonmetallic pipe joints shall be installed in accordance with the written instructions of the manufacturer.

3.4.5 Expansion Loops

If expansion compensation is needed, expansion loops and expansion bends (Z- and L- type) shall be factory fabricated of casing, insulation, and carrier piping identical to that furnished for straight runs. Expansion loops and bends shall be properly designed in accordance with the allowable stress limits indicated in ASME B31.1 for the type of pipe used. Expansion loops and bends shall be shipped to the jobsite in the maximum size sections feasible to minimize the number of field joints. The expansion loops and bends casing and insulation where applicable, shall be suitably sized to accommodate pipe movement. Field joints shall be made in straight runs of the expansion loops and bends, and the number shall be kept to a minimum. For steel pipe, cold springing shall not be allowed when sizing the expansion loops and bends, but piping shall be cold sprung one-half the calculated maximum operational expansion during field assembly. Pipe stress in expansion loops and bends shall conform to the requirements for expansion loops specified in ASME B31.1.

3.4.6 Anchors

Anchor design shall be in accordance with the published data of the manufacturer and for prefabricated systems shall be factory fabricated by the prefabricated system manufacturer. In all cases, the design shall be such that water penetration, condensation, or vapor transmission will not wet the insulation.

3.4.7 Field Casing Closures

Field insulation and encasement of joints shall be accomplished after the visual and pressure tests specified are completed. Field insulation and encasement shall be in accordance with the manufacturer's written instructions. Thickness dimensions of the insulation and casing materials shall not be less than those of the adjoining prefabricated section. Insulating material shall be foamed in place polyurethane. Care should be taken to ensure that field closures are made under conditions of temperature and cleanliness required to produce a sound, continuous vapor barrier. A standard polyethylene heat shrink sleeve shall be installed over the casing and shall have a 150 mm minimum overlap at each end.

3.4.8 Underground Warning Tape

Underground warning tape shall be buried above the piping during the trench backfilling and shall be buried approximately 300 mm deep. Tape shall be polyethylene tape with metallic core. Tape shall be 150 mm wide and be printed with repetitive caution warnings along its length. Tapes shall be yellow in color with black letters. Tape color and lettering shall not be affected by moisture or other substances contained in the backfill material.

3.4.9 Markers for Underground Piping

Markers for underground piping shall be placed as indicated approximately 600 mm to the right of the distribution system and referenced to the flow direction in the supply line. The marker shall be concrete 150 mm square or round section 600 mm long. The top edge of the marker shall have a minimum 10 mm chamfer all around. The letters CHW, LHW shall be impressed or cast on the top of the markers to indicate the type of system that is

being identified. Each letter shall be formed with a V-shaped groove and shall have a width of stroke at least 6 mm at the top and depth of 6 mm. The top of the marker shall protrude not more than 25 mm above finished grade.

3.5 EARTHWORK

Earthwork shall be performed in accordance with Section 02316 EXCAVATION, TRENCHING, AND BACKFILLING FOR UTILITIES SYSTEMS.

3.6 ELECTRICAL WORK

Electrical work shall be performed in accordance with Section 16375 ELECTRICAL DISTRIBUTION SYSTEM, UNDERGROUND.

3.7 TESTING

Tests shall be conducted before, during, and after installation of the system. All instruments, equipment, facilities, and labor required to properly conduct the tests shall be provided by the Contractor. Test pressure gauges for a specific test shall have dials indicating not less than 1-1/2 times nor more than 2 times the test pressure. It shall be the Contractor's responsibility to make the pipe system workable at his expense.

3.7.1 Metallic Pipe Welds

An approved independent testing firm or firms regularly engaged in radiographic testing shall perform a radiographic examination of the field welds. The radiographic testing shall be performed in accordance with ASME B31.1. All radiographs shall be reviewed and interpreted by a Certified Level III Radiographer employed by the testing firm. Any welds found to be unacceptable shall be removed, rewelded and radiographically reexamined in accordance with the above criteria. Such repair and reexamination shall be accomplished at no cost to the Government.

3.7.2 Carrier Pipe Cleaning and Testing

Distribution piping shall be tested as required before backfilling and with all joints exposed. The area between joints may be backfilled as necessary to prevent pipe movement.

3.7.2.1 Cleaning Carrier Pipe

Prior to testing, the interior of the carrier pipe shall be cleaned of foreign materials by thorough flushing with clean water. Water shall be circulated at a velocity between 2 and 3 m/s (7 and 10 feet per second) for a minimum of 4 hours. If required, temporary and/or supplementary pumps shall be provided to ensure that required velocity is achieved. System strainers shall be cleaned after the flushing operation is complete. Temporary strainers shall be installed as required. After flushing, the water shall remain in the piping system for testing of the system. All air shall be removed from the system prior to starting the tests.

3.7.2.2 Hydrostatic Pressure Cycling and Tests

Hydrostatic pressure cycling shall have 4 cycles. Each cycle shall consist of a 10 minute period at 1000 kPa followed by a 5 minute period at a pressure less than 350 kPa. The next cycle shall begin immediately following the completion of the previous cycle. Pressure rise and drop

shall not exceed 690 kPa per minute. The pressure gauge shall be located and the pressure measured at the opposite end of the system from where the pressure is applied. After completion of the hydrostatic pressure cycling, the first hydrostatic pressure test shall be performed. During the first hydrostatic pressure test, the system shall be proven tight at a pressure of 1-1/2 times the working pressure up to 1000 kPa. This pressure shall be held for a minimum of 1 hour. The method of pressurizing the system shall be disconnected from the system before starting the 1 hour pressure holding period. If the pressure cannot be held for the specified length of time, the cause of pressure loss shall be determined, corrected and the hydrostatic pressure cycling and first hydrostatic pressure test shall be repeated until the system can hold the required pressure for at least 1 hour. After successful completion of the first hydrostatic pressure test, the water shall be drained out of the piping system and the piping system filled with treated water as defined in paragraph TREATED WATER for the remaining tests and for permanent operation of the system. The hydrostatic pressure cycling and tests shall be repeated after the system has been filled with treated water, using the same test conditions and criteria.

3.7.2.3 Operational Test

Operational test shall be performed on the complete system or testable portions thereof. The test shall be conducted with full design flows and operating temperatures in all runs of piping as if in service, to demonstrate satisfactory function and operating effectiveness. The operational test will have two cycles. Each cycle shall consist of a 6-hour period with treated water in the system at the maximum operating temperature of 60 degrees C and maximum flow rate, and a period of at least 6-hours with no flow. The Contractor shall supply temporary pumps, piping connections, boilers, chillers and the gauges required to circulate the water at the desired temperatures and flow rates. Water shall be circulated through supply lines and returned through the return piping to demonstrate that the pressure drop is compatible with the flow rate and size of pipe and to show that obstructions do not exist in the piping system. Any unusual indicated pressure drop will be investigated and any obstructions removed. Any leaks found shall be repaired. After any obstructions have been removed and any leaks repaired, the operational test shall be repeated until successfully passed.

3.7.2.4 Final Hydrostatic Test

After successful completion of the operational test, the system shall be pressurized to 1-1/2 times the working pressure up to 1000 kPa. This pressure shall be held for a minimum of 4 hours. Means of pressurizing shall be disconnected prior to the start of the 4-hour pressure holding period. If the pressure cannot be held for the specified length of time, the cause of the pressure loss shall be determined, corrected, and all of the hydrostatic pressure cycling and tests repeated.

-- End of Section --

SECTION TABLE OF CONTENTS

DIVISION 08 - DOORS & WINDOWS

SECTION 08810

GLASS AND GLAZING

PART 1 GENERAL

1.1 REFERENCES
1.2 SUBMITTALS
1.3 SYSTEM DESCRIPTION
1.4 DELIVERY, STORAGE AND HANDLING
1.5 PROJECT/SITE CONDITIONS
1.6 WARRANTY

PART 2 PRODUCTS

2.1 FLOAT GLASS
2.1.1 Tinted (Light-Reducing) Glass
2.2 ROLLED GLASS
2.2.1 Wired Glass
2.3 HEAT-TREATED GLASS
2.3.1 Tempered Glass, Clear (For Interior Use)
2.3.2 Tempered Glass, Tinted (Light Reducing)
2.4 MIRRORS
2.4.1 Glass Mirrors
2.4.2 Mirror Accessories
2.4.2.1 Mastic
2.4.2.2 Mirror Frames
2.4.2.3 Mirror Clips
2.5 GLAZING ACCESSORIES
2.5.1 Preformed Tape
2.5.2 Sealant
2.5.3 Glazing Gaskets
2.5.3.1 Fixed Glazing Gaskets
2.5.3.2 Wedge Glazing Gaskets
2.5.3.3 Aluminum Framing Glazing Gaskets
2.5.4 Setting and Edge Blocking
2.6 LAMINATED GLASS

PART 3 EXECUTION

3.1 PREPARATION
3.2 INSTALLATION
3.3 CLEANING
3.4 PROTECTION

-- End of Section Table of Contents --

SECTION 08810

GLASS AND GLAZING

PART 1 GENERAL

1.1 REFERENCES

The publications listed below form a part of this specification to the extent referenced. The publications are referred to in the text by basic designation only.

AMERICAN NATIONAL STANDARDS INSTITUTE (ANSI)

ANSI Z97.1	(1984; Rev 1994) Safety Performance Specifications and Methods of Test for Safety Glazing Materials Used in Buildings

AMERICAN SOCIETY FOR TESTING AND MATERIALS (ASTM)

ASTM C 509	(1994) Elastomeric Cellular Preformed Gasket and Sealing Material
ASTM C 864	(1993) Dense Elastomeric Compression Seal Gaskets, Setting Blocks, and Spacers
ASTM C 920	(1995) Elastomeric Joint Sealants
ASTM C 1036	(1991) Flat Glass
ASTM C 1048	(1992) Heat-Treated Flat Glass - Kind HS, Kind FT Coated and Uncoated Glass
ASTM C 1172	(1996) Laminated Architectural Flat Glass
ASTM D 395	(1989; R 1994) Rubber Property - Compression Set
ASTM E 1300	(1994) Determining the Minimum Thickness and Type of Glass Required to Resist a Specified Load

CODE OF FEDERAL REGULATIONS (CFR)

16 CFR 1201	Safety Standard for Architectural Glazing Materials

GLASS ASSOCIATION OF NORTH AMERICA (GANA)

GANA-01	(1997) Glazing Manual

NATIONAL FIRE PROTECTION ASSOCIATION (NFPA)

NFPA 80	(1995) Fire Doors and Fire Windows

NFPA 252	(1995) Fire Tests of Door Assemblies
NFPA 257	(1996) Fire Tests for Window and Glass Block Assemblies

1.2 SUBMITTALS

Government approval is required for submittals with a "GA" designation; submittals having an "FIO" designation are for information only. The following shall be submitted in accordance with Section 01330 SUBMITTAL PROCEDURES:

SD-01 Data

Glass; FIO. Glazing Accessories; FIO.

Manufacturer's descriptive product data, handling and storage recommendations, installation instructions, and cleaning instructions.

SD-04 Drawings

Glazing Materials and Accessories; FIO.

Drawings showing complete details of the proposed setting methods, mullion details, edge blocking, size of openings, frame details, materials, and types and thickness of glass.

SD-13 Certificates

Glass; FIO.

Certificates stating that the glass meets the specified requirements. Labels or manufacturers marking affixed to the glass will be accepted in lieu of certificates.

SD-14 Samples

Glass; FIO.

Two 203 x 254 mm samples of each of the following: tinted tempered glass, clear tempered glass, and wired glass.

1.3 SYSTEM DESCRIPTION

Glazing systems shall be fabricated and installed watertight and airtight to withstand thermal movement and wind loading without glass breakage, gasket failure, deterioration of glazing accessories, and defects in the work. Glazed panels shall comply with the safety standards, as indicated in accordance with ANSI Z97.1. Glazed panels shall comply with indicated wind loading in accordance with ASTM E 1300.

1.4 DELIVERY, STORAGE AND HANDLING

Glazing compounds shall be delivered to the site in the manufacturer's unopened containers. Glass shall be stored indoors in a safe, well ventilated dry location in accordance with manufacturer's instructions, and shall not be unpacked until needed for installation. Glass shall not be stored on site over 1 month.

1.5 PROJECT/SITE CONDITIONS

Ventilation shall be provided to prevent condensation of moisture on glazing work during installation. Glazing work shall not be performed during damp or raining weather.

1.6 WARRANTY

Manufacturer's standard performance guarantees or warranties that extend beyond a 1 year period shall be provided.

PART 2 PRODUCTS

2.1 FLOAT GLASS

2.1.1 Tinted (Light-Reducing) Glass

Tinted (light-reducing) glass shall be Type I transparent flat type, Class 3-tinted, Quality q3 - glazing select, 50 percent light transmittance, 72 percent shading coefficient, conforming to ASTM C 1036. Color shall be bronze.

2.2 ROLLED GLASS

2.2.1 Wired Glass

Wired glass shall be 6.3 mm (1/4-inch thick), Type II flat type, Class 1 - translucent, Quality q8 - glazing, Form 1 - wired and polished both sides conforming to ASTM C 1036. Wire mesh shall be polished stainless steel Mesh 2 - square. Wired glass for fire-rated windows shall bear an identifying UL label or the label of a nationally recognized testing agency, and shall be rated as indicated on the drawings when tested in accordance with NFPA 257. Wired glass for fire-rated doors shall be tested as part of a door assembly in accordance with NFPA 252. Color shall be clear.

2.3 HEAT-TREATED GLASS

Heat-treated glass shall conform to the following requirements.

2.3.1 Tempered Glass, Clear (For Interior Use)

Tempered glass shall be 6.3 (1/4-inch) thick, kind FT fully tempered, Type I-transparent flat type, Class 1-clear, Condition A uncoated surface, Quality q3 - glazing select. Color shall be clear.

2.3.2 Tempered Glass, Tinted (Light Reducing)

Tempered glass shall be 6.3 mm (1/4-inch) thick, kind FT fully tempered, Type I-transparent flat type, Class 3 - Tinted Light-Reducing, Condition B or C, Quality q3 - glazing select, 50 to 55 percent light transmittance, 70 to 75 percent shading coefficient, conforming to ASTM C 1048. Color shall be bronze.

2.4 MIRRORS

2.4.1 Glass Mirrors

Glass for mirrors shall be Type I transparent flat type, Class 1-clear,

Glazing Quality q1 6 mm (1/4 inch) thick conforming to ASTM C 1036. Glass color shall be clear. Glass shall be coated on one surface with silver coating, copper protective coating, and mirror backing paint. Silver coating shall be highly adhesive pure silver coating of a thickness which shall provide reflectivity of 83 percent or more of incident light when viewed through 6 mm (1/4 inch) thick glass, and shall be free of pinholes or other defects. Copper protective coating shall be pure bright reflective copper, homogeneous without sludge, pinholes or other defects, and shall be of proper thickness to prevent "adhesion pull" by mirror backing paint. Mirror backing paint shall consist of two coats of special scratch and abrasion-resistant paint , and shall be baked in uniform thickness to provide a protection for silver and copper coatings which will permit normal cutting and edge fabrication.

2.4.2 Mirror Accessories

2.4.2.1 Mastic

Mastic for setting mirrors shall be a polymer type mirror mastic resistant to water, shock, cracking, vibration and thermal expansion. Mastic shall be compatible with mirror backing paint, and shall be approved by mirror manufacturer.

2.4.2.2 Mirror Frames

Mirrors shall be provided with mirror frames (J-mold channels) fabricated of one-piece roll-formed Type 304 stainless steel with No. 4 brushed satin finish and concealed fasteners which will keep mirrors snug to wall. Frames shall be 32 x 6 x 6 mm (1-1/4 x 1/4 x 1/4 inch) continuous at top and bottom of mirrors. Concealed fasteners of type to suit wall construction material shall be provided with mirror frames.

2.4.2.3 Mirror Clips

Concealed fasteners of type to suit wall construction material shall be provided with clips.

2.5 GLAZING ACCESSORIES

2.5.1 Preformed Tape

Preformed tape shall be elastomeric rubber extruded into a ribbon of a width and thickness suitable for specific application. Tape shall be of type which will remain resilient, have excellent adhesion, and be chemically compatible to glass, metal, or wood.

2.5.2 Sealant

Sealant shall be elastomeric conforming to ASTM C 920, Type S or M, Grade NS, Class 12.5, Use G, of type chemically compatible with setting blocks, preformed sealing tape and sealants used in manufacturing insulating glass. Color of sealant shall be as selected to match ajoining frame.

2.5.3 Glazing Gaskets

Glazing gaskets shall be extruded with continuous integral locking projection designed to engage into metal glass holding members to provide a watertight seal during dynamic loading, building movements and thermal movements. Glazing gaskets for a single glazed opening shall be continuous

one-piece units with factory-fabricated injection-molded corners free of flashing and burrs. Glazing gaskets shall be in lengths or units recommended by manufacturer to ensure against pull-back at corners. Glazing gasket profiles shall be as indicated on drawings.

2.5.3.1 Fixed Glazing Gaskets

Fixed glazing gaskets shall be closed-cell (sponge) smooth extruded compression gaskets of cured elastomeric virgin neoprene compounds conforming to ASTM C 509, Type 2, Option 1.

2.5.3.2 Wedge Glazing Gaskets

Wedge glazing gaskets shall be high-quality extrusions of cured elastomeric virgin neoprene compounds, ozone resistant, conforming to ASTM C 864, Option 1, Shore A durometer between 65 and 75.

2.5.3.3 Aluminum Framing Glazing Gaskets

Glazing gaskets for aluminum framing shall be permanent, elastic, non-shrinking, non-migrating, watertight and weathertight.

2.5.4 Setting and Edge Blocking

Neoprene setting blocks shall be dense extruded type conforming to ASTM D 395, Method B, Shore A durometer between 70 and 90. Edge blocking shall be Shore A durometer of 50 (+ or - 5). Silicone setting blocks shall be required when blocks are in contact with silicone sealant. Profiles, lengths and locations shall be as required and recommended in writing by glass manufacturer.

2.6 LAMINATED GLASS

Laminated glass shall consist of two layers of Type I transparent float glass, Class 2-tinted Quality q3 - glazing select, conforming to ASTM C 1036. Glass shall be bonded together with 0.76 mm thick PVB interlayer under pressure, or alternatives such as resin laminates, conforming to requirements of 16 CFR 1201 and ASTM C 1172. Color shall be bronze as indicated on drawings. Total thickness if laminated glass shall be nominal 6 mm (1/4 inch).

PART 3 EXECUTION

3.1 PREPARATION

Openings and framing systems scheduled to receive glass shall be examined for compliance with approved shop drawings, GANA-01 and glass manufacturer's recommendations including size, squareness, offsets at corners, presence and function of weep system, face and edge clearance requirements and effective sealing between joints of glass-framing members. Detrimental materials shall be removed from glazing rabbet and glass surfaces and wiped dry with solvent. Glazing surfaces shall be dry.

3.2 INSTALLATION

Glass and glazing work shall be performed in accordance with approved shop drawings, GANA-01, glass manufacturer's instructions and warranty requirements. Glass shall be installed with factory labels intact and

removed only when instructed. Wired glass shall be installed in accordance with NFPA 80. Edges and corners shall not be ground, nipped or cut after leaving factory. Springing, forcing or twisting of units during installation will not be permitted.

3.3 CLEANING

Upon completion of project, outside surfaces of glass shall be washed clean and the inside surfaces of glass shall be washed and polished in accordance with glass manufacturer's recommendations.

3.4 PROTECTION

Glass work shall be protected immediately after installation. Glazed openings shall be identified with suitable warning tapes, cloth or paper flags, attached with non-staining adhesives. Glass units which are broken, chipped, cracked, abraded, or otherwise damaged during construction activities shall be removed and replaced with new units.

-- End of Section --

SECTION TABLE OF CONTENTS

DIVISION 11 - EQUIPMENT

SECTION 11400

FOOD SERVICE EQUIPMENT

PART 1 GENERAL

1.1 REFERENCES
1.2 GENERAL REQUIREMENTS
1.2.1 Mechanical, Electrical, and Plumbing Work
1.2.1.1 Control Valves and Pressure Regulators
1.2.1.2 Plumbing, Electrical Work, and Gas Piping
1.2.2 National Sanitation Foundation Standards
1.2.3 Verification of Dimensions and Coordination of Project Data
1.2.4 Standard Products
1.2.5 Equipment Nameplates and Identification Plates
1.2.6 American Gas Association Laboratories Standards
1.2.7 Underwriters Laboratories Standards
1.3 SUBMITTALS
1.4 DELIVERY AND STORAGE
1.4.1 Delivery
1.4.2 Storage
1.4.3 Protection of Fixed/Fabricated Manufactured Equipment
1.4.4 Prohibited Use of Equipment
1.4.5 Damaged Equipment

PART 2 PRODUCTS

2.1 MATERIALS
2.1.1 Black Iron Pipe
2.1.2 Brass Pipe
2.1.3 Chromium Plating of Brass Pipe, Valves, and Fittings
2.1.4 Copper Tubing
2.1.5 Stainless Steel, Nonmagnetic
2.1.6 Stainless Steel Pipe and Tubing
2.1.7 Fittings for Copper Tubing
2.1.8 Fittings for Brass Pipe
2.1.9 Galvanizing Repair Compound
2.1.10 Silver Solder
2.1.11 Steel Structural Shapes for Framing
2.1.11.1 Paint and Coatings
2.1.11.2 Exterior Parts
2.1.12 Tin-Antimony Solder
2.2 CONSTRUCTION OF FABRICATED EQUIPMENT
2.2.1 Welding
2.2.1.1 Welding Rods
2.2.1.2 Weld Quality
2.2.2 Soldering
2.2.3 Brazing
2.2.4 Grinding, Polishing, and Finishing
2.2.5 Chromium Plating

2.2.6 Fastening Devices
2.3 COUNTERS
2.3.1 Counter Tops
2.3.2 Cafeteria Counters
2.3.3 Pitch and Drainage of Equipment Surfaces
2.3.4 Drip Gutter
2.3.5 Counter Edges and Backsplashes
2.3.5.1 Counter Edges
2.3.5.2 Counter Backsplash
2.3.6 Counter Top Support Angles
2.3.7 Sound Deadening of Counters
2.4 COUNTER BASES
2.4.1 Closed Bases
2.4.2 Open Bases
2.4.3 Gussets
2.4.4 Legs
2.4.5 Feet
2.4.6 Undercounter Shelving
2.4.6.1 Open Base Shelves
2.4.6.2 Closed Base Shelves
2.4.7 Tray Slides
2.4.7.1 Solid Type Slide
2.4.7.2 Support Brackets
2.4.8 Protector Shelf
2.4.8.1 Heat Lamps
2.4.8.2 Fluorescent Display Light Modules
2.4.8.3 Heat Lamp/Display Wiring
2.4.8.4 Protector Glass
2.4.8.5 Breath Protector
2.5 DISH COUNTERS
2.5.1 Dish Counter Support Channels
2.5.2 Dish Counter Components
2.5.2.1 Scupper Drain
2.5.2.2 Prerinse Spray
2.5.2.3 Hose Bib Faucet
2.5.2.4 Undershelves
2.5.2.5 Scraping Trough
2.5.3 Glass/Cup Rack Overshelf
2.5.4 Dish/Tray Return Shelf
2.6 SINKS
2.6.1 Plumbing/Trim Requirements
2.6.1.1 Drain Plug Fittings
2.6.1.2 Backsplash-Mounted Faucets
2.6.1.3 Counter Top or Ledge-Mounted Faucets
2.6.1.4 Backflow Preventers
2.6.1.5 Connected Overflows
2.6.1.6 Water-Fill Faucets
2.6.1.7 Water Hammer Arresters
2.6.1.8 Control Valve Mountings
2.6.2 Pot Washing Sinks
2.6.2.1 Final Rinse Compartment
2.6.2.2 Temperature Gauge
2.6.2.3 Valves, Temperature Gauge, and Controls Mounting
2.6.2.4 False Bottom
2.6.2.5 Electric Water Heater
2.6.3 Cutlery and Excess Liquid Sinks
2.7 FOOD WASTE PULPING SYSTEM
2.8 FOOD WASTE DISPOSER
2.9 FOOD WASTE PULPER

2.10 FOOD WASTE WATER PRESS
2.11 DRAIN TRENCH LINER/GRATING
2.11.1 Interior of the Liner
2.11.2 Stainless Steel Grating
2.12 HOODS
2.12.1 Exhaust Hood Connections Provisions
2.12.1.1 Exhaust Duct for Canopy or Noncanopy Hoods
2.12.1.2 Hood Support
2.12.1.3 Make-Up Air Untempered
2.12.1.4 Hood Lights and Wiring
2.12.1.5 Closure Panels
2.12.1.6 Wall Panels
2.12.2 Grease Extracting Exhaust Hoods Over Cooking Equipment
2.12.2.1 Construction
2.12.2.2 Pass-Over-Type
2.12.2.3 Automatic Washdown System
2.12.2.4 Internal Fire Protection System
2.13 CONDENSATE HOODS
2.13.1 Condensate Exhaust Hood Connections Provisions
2.13.1.1 Exhaust Duct for Canopy or Noncanopy Condensate Hoods
2.13.1.2 Hood Support
2.13.1.3 Hood Lights and Wiring
2.13.1.4 Closure Panels
2.13.2 Ducts at Dishwashing Machines
2.13.3 Condensate Exhaust Hoods
2.13.3.1 Condensate Gutter
2.13.3.2 Duct Openings
2.13.3.3 Ceiling Recessed Exhaust Hood at Dishwashing Machines
2.14 PREFABRICATED WALK-IN REFRIGERATORS
2.14.1 General Requirements
2.14.1.1 Closure Panels
2.14.1.2 I-Beam Supports
2.14.1.3 Identification Signs
2.14.1.4 Door
2.14.1.5 Strip Curtains
2.14.1.6 Door Stops
2.14.1.7 Protective Bumpers
2.14.1.8 Gasket
2.14.1.9 Alarm Systems
2.14.2 Floor
2.14.3 Refrigeration Systems
2.14.3.1 Unit Coolers
2.14.3.2 Drain Fittings
2.14.3.3 Electrical Conduit
2.14.3.4 System Start Up
2.15 GAS-BURNING EQUIPMENT
2.15.1 General Description
2.15.2 Restraining Device for Mobile Gas Equipment
2.15.3 Flexible Hoses
2.16 ELECTRICAL WORK
2.16.1 Installed Equipment Load
2.16.2 Electrical Fittings and Components
2.16.3 Cords and Caps
2.16.4 Switches and Controls
2.16.5 Motors
2.16.6 Heating Elements
2.16.7 Receptacles and Switches
2.16.8 Light Fixtures
2.16.9 Final Electrical Connection Provisions

2.16.10 Lamps
2.17 PLUMBING WORK
2.17.1 Plumbing Connection Provisions

PART 3 EXECUTION

3.1 INSTALLATION
3.1.1 Equipment Connections
3.1.2 Gas Equipment Installation
3.2 TESTING
3.2.1 Performance Tests
3.2.2 Operating Tests
3.2.3 Clean and Adjust
3.2.4 Equipment Start-Up/Demonstration
3.3 KITCHEN EQUIPMENT SPECIFICATIONS

-- End of Section Table of Contents --

SECTION 11400

FOOD SERVICE EQUIPMENT

PART 1 GENERAL

1.1 REFERENCES

The publications listed below form a part of this specification to the extent referenced. The publications are referred to in the text by basic designation only.

AMERICAN CONFERENCE OF GOVERNMENTAL INDUSTRIAL HYGIENISTS (ACGIH)

ACGIH-01	(1992) Industrial Ventilation - A Manual of Recommended Practice

AMERICAN GAS ASSOCIATION LABORATORIES (AGAL)

AGAL-01	(Jan 1994) Directory of Certified Appliances and Accessories

AMERICAN NATIONAL STANDARDS INSTITUTE (ANSI)

ANSI Z21.15	(1992) Manually Operated Gas Valves for Appliances, Appliance Connector Valves and Hose End Valves
ANSI Z21.69	(1992; Z21.69a) Connectors for Movable Gas Appliances

AMERICAN SOCIETY FOR TESTING AND MATERIALS (ASTM)

ASTM A 36	(1993a) Structural Steel
ASTM A 53	(1993) Pipe, Steel, Black and Hot-Dipped, Zinc-Coated Welded and Seamless
ASTM A 123	(1989a) Zinc (Hot-Dip Galvanized) Coatings on Iron and Steel Products
ASTM A 167	(1993) Stainless and Heat-Resisting Chromium-Nickel Steel Plate, Sheet, and Strip
ASTM A 240	(1993b) Heat-Resisting Chromium and Chromium-Nickel Stainless Steel Plate, Sheet, and Strip for Pressure Vessels
ASTM B 32	(1995) Solder Metal
ASTM B 43	(1991) Seamless Red Brass Pipe, Standard Sizes
ASTM B 75	(1992a) Seamless Copper Tube

ASTM B 88	(1993) Seamless Copper Water Tube
ASTM D 520	(1984; R 1989) Zinc Dust Pigment

AMERICAN SOCIETY OF MECHANICAL ENGINEERS (ASME)

ASME A112.18.1M	(1994; Errata Feb 1995) Plumbing Fixture Fittings
ASME B16.15	(1985; R 1994) Cast Bronze Threaded Fittings Classes 125 and 250
ASME B16.22	(1989) Wrought Copper and Copper Alloy Solder Joint Pressure Fittings
ASME B16.26	(1988) Cast Copper Alloy Fittings for Flared Copper Tubes

AMERICAN WELDING SOCIETY (AWS)

AWS A5.8	(1992) Filler Metals for Brazing and Braze Welding

MANUFACTURERS STANDARDIZATION SOCIETY OF THE VALVE AND FITTINGS INDUSTRY (MSS)

MSS SP-72	(1992) Ball Valves with Flanged or Butt-Welding Ends for General Service

NATIONAL ELECTRICAL MANUFACTURERS ASSOCIATION (NEMA)

NEMA 250	(1991) Enclosures for Electrical Equipment (1000 Volts Maximum)

NATIONAL FIRE PROTECTION ASSOCIATION (NFPA)

NFPA 10	(1994) Portable Fire Extinguishers
NFPA 17A	(1990) Wet Chemical Extinguishing Systems
NFPA 54	(1992) National Fuel Gas Code
NFPA 70	(1993) National Electrical Code
NFPA 96	(1994) Installation of Equipment for the Removal of Smoke and Grease-Laden Vapors from Commercial Cooking Equipment

NSF INTERNATIONAL (NSF)

NSF-01	(1992) NSF Listings - Food Service Equipment and Related Products, Components and Materials
NSF-02	(1968; updated Feb 1989) Manual on

	Sanitation Aspects of Installation of Food Service Equipment
NSF Std 2	(1952; Rev May 1992) Food Equipment
NSF Std 7	(1990) Food Service Refrigerators and Storage Freezers
NSF Std 35	(1991) Laminated Plastics for Surfacing Food Service Equipment

UNDERWRITERS LABORATORIES (UL)

UL-02	(1993; Supple) Electrical Appliance and Utilization Equipment Directory
UL 197	(1993; Rev thru Nov 1993) Commercial Electric Cooking Appliances
UL 207	(1993; Rev thru Mar 1995) Refrigerant-Containing Components and Accessories, Nonelectrical
UL 471	(1992) Commercial Refrigerators and Freezers
UL 710	(1990; Rev Sep 1993) Exhaust Hoods for Commercial Cooking Equipment

1.2 GENERAL REQUIREMENTS

Food service equipment shall be of the sizes and types shown. Equipment, materials, and fixtures required for use in conjunction with the items to be furnished by the Government shall be furnished and installed by the Contractor. Equipment, materials, and fixtures indicated on the drawings and schedules shown as Contractor furnished and installed, shall be furnished and installed by the Contractor.

1.2.1 Mechanical, Electrical, and Plumbing Work

Roughing-in and final connection of mechanical, electrical and plumbing systems to fixed and movable food service equipment and cold storage assemblies shall be as specified in Section 15400 PLUMBING, GENERAL PURPOSE; and Section 16415 ELECTRICAL WORK, INTERIOR; and Section 15488 GAS PIPING SYSTEMS.

1.2.1.1 Control Valves and Pressure Regulators

Control valves, appliance pressure regulators for water, gas and vacuum breakers, wherever required on food service equipment (chrome-plated where exposed) shall be furnished under this section.

1.2.1.2 Plumbing, Electrical Work, and Gas Piping

Plumbing, electrical work, and gas piping specified, but not shown, shall be provided in accordance with Section 15400 PLUMBING, GENERAL PURPOSE; and Section 16415 ELECTRICAL WORK, INTERIOR; and Section 15488 GAS PIPING SYSTEMS.

1.2.2 National Sanitation Foundation Standards

Food service equipment shall comply with NSF-01. Acceptable evidence of meeting the requirements of the applicable NSF standards shall be any one of the following:

a. A listing of the equipment in the NSF Food Service Equipment Listing and display of the NSF seal on the equipment.

b. A certification issued for special or specific food service equipment by NSF under their special one time contract evaluation and certification.

c. A certified test report from an independent testing laboratory, approved by the Office of the Surgeon General, indicating that the specific food service equipment has been tested and conforms to the applicable NSF standards.

1.2.3 Verification of Dimensions and Coordination of Project Data

The Contractor shall become familiar with all details of the work and shall advise the Contracting Officer of any discrepancy before performing any work. The Contractor shall perform the following:

a. Horizontal and vertical dimensions shall be verified in the field.

b. Contract drawings and submittal data shall be reviewed for accuracy and completeness.

c. The installed utility capacity and location shall be field checked.

d. Critical systems/components shall be reviewed for application and capacities such as for exhaust hoods, refrigeration systems, fire suppression systems, gas, water, and steam/condensate line sizes and manifold configurations.

e. Delivery shall be coordinated for access through finished openings and vertical handling limitation within the building.

1.2.4 Standard Products

Materials and equipment shall be the standard products of manufacturers regularly engaged in the manufacture of the products and shall essentially duplicate items that have been in satisfactory use for at least 2 years prior to bid opening. The experience used shall include applications of equipment and materials under similar circumstances and of similar size. Equipment shall be supported by a service organization that is, in the opinion of the Contracting Officer, reasonably convenient to the site.

1.2.5 Equipment Nameplates and Identification Plates

Each item of equipment shall bear a stainless steel, aluminum, or engraved polyester nameplate or identification plate, as standard with the manufacturer, located in a conspicuous position and permanently fastened to the equipment.

Nameplates or identification plates shall be of the size standard with the manufacturer for the particular piece of equipment provided, and shall be of the approximate size in the referenced specification.

Nameplates or identification plates shall reflect the following:

a. Name of the manufacturer/trade name.

b. Serial number, make, and model number.

c. Pertinent ratings, operating characteristics, and other information as standard with the manufacturer.

d. Date of manufacture.

e. Electrical characteristics.

f. Other applicable data, such as flow rate, temperature, pressure, capacity, and material of construction.

Separate equipment identification plates with the contract number marked thereon, shall be securely fastened to the surface of each piece of equipment. The identification plate and information imprinted thereon shall be as permanent as the life expectancy of the equipment to which they are affixed.

1.2.6 American Gas Association Laboratories Standards

Gas-burning equipment shall be designed for operation with the type of gas specified and shall be approved by AGAL. Acceptable evidence of meeting the requirements of the applicable AGAL-01 standards shall be one of the following:

a. A photostatic copy of the AGAL appliance certificate.

b. A listing of the specific food service equipment or appliance in the AGAL Directory of Certified Appliances and Accessories.

c. A certified test report from a nationally recognized independent testing laboratory, indicating that the specified food service equipment or appliance has been tested and conforms to the requirements of the applicable AGAL standards.

1.2.7 Underwriters Laboratories Standards

Electrically operated equipment shall be in accordance with UL-02 and UL 197. Evidence of meeting the requirements of UL shall be any one of the following:

a. Display of UL label on the equipment.

b. A UL listing mark.

c. A certified test report from a nationally recognized independent testing laboratory indicating that the specific food service equipment has been tested and conforms to the applicable UL standards.

1.3 SUBMITTALS

Government approval is required for submittals with a "GA" designation; submittals having an "FIO" designation are for information only. The

following shall be submitted in accordance with Section 01330 SUBMITTAL PROCEDURES:

SD-04 Detail Drawings

Food Service Equipment; FIO.

Detail drawings consisting of a complete list of equipment and materials, including manufacturer's descriptive and technical literature, performance charts and curves, catalog cuts, and installation instructions. Detail drawings shall also contain complete wiring, piping, and schematic diagrams, and any other details required to demonstrate that the system has been coordinated and will properly function as a unit. Drawings shall show proposed layout and anchorage of equipment and appurtenances, and equipment relationship to other parts of the work, including clearances for maintenance and operation.

Brochures shall have front and rear protective covers with labeled project name and include:

a. Index indicating item number, quantity, description, and manufacturer.

b. Fly sheet for each component indicating item number, name, quantity, manufacturer, optional equipment, modification, special instruction, and utility requirements.

c. Catalog specifications sheets and manufacturer's drawings.

Detail drawings by Contractor shall be separate drawings and shall be the Contractor's standard sheet size, but not smaller than the contract drawings, and indicate:

a. Food service equipment and cold storage assemblies with itemized schedule.

b. Special conditions drawings indicating size and location of slab depressions, cores, wall openings, blockouts, ceiling pockets, blocking grounds, ceiling, wall, access panels, and above ceiling hanger assemblies.

c. Plumbing/mechanical rough-in drawings.

d. Electrical rough-in drawings.

Detail drawings by manufacturer shall be separate drawings; sheet size shall be manufacturer's standard size and indicate:

a. Item number, name, and quantity.

b. Construction details, sections, and elevations.

c. Adjacent walls, columns, and equipment.

d. Plumbing and electrical schematics, and fabricated fixtures with single electrical or plumbing connection.

e. Service access panels required for maintenance or replacement of mechanical or electrical components.

SD-09 Reports

Testing; FIO.

Test reports in booklet format showing all field tests performed to prove compliance with the specified performance criteria, upon completion and testing of the installed system. Each test report shall indicate the final position of controls.

SD-19 Operation and Maintenance Manuals

Food Service Equipment; FIO.

Six complete copies of the service manual, after approval of the detail drawings and not later than 3 months prior to the date of beneficial occupancy, with data for each different item of material and equipment specified. Service manuals shall include:

a. Front and rear protective covers with labeled project name.

b. Index indicating item number, quantity, description, manufacturer's name, and model number.

c. Maintenance instructions for stainless steel and plastic laminate.

d. Manufacturer's catalog specification sheets and manufacturer's detail drawings.

e. Manufacturer's operation manual outlining the step-by-step procedures for equipment installation, startup, basic operation features, and operation shutdown.

f. Manufacturer's maintenance manual listing routine maintenance procedures, possible breakdowns, repairs, and troubleshooting guides. The instructions shall include simplified diagrams for the equipment as installed.

g. Manufacturer's list of parts and supplies with current unit price and address of manufacturer's parts supply warehouse.

1.4 DELIVERY AND STORAGE

1.4.1 Delivery

Unless otherwise directed, the following procedures shall apply:

a. Field assembled fixed equipment integrated into structure shall be sent to jobsite when required.

b. Fixed equipment not integrated into structure shall be sent to the jobsite after completion of finished ceilings, lighting, and acidizing of the finished floor and wall systems, including painting.

c. Major movable equipment shall be delivered to inventory in a secured area for interim jobsite storage, or if secured area is not available, when fixed equipment installation/clean-up has been completed.

d. Minor appliances and loose items shall be delivered to the jobsite when the Contracting Officer is prepared to receive and inventory such items.

1.4.2 Storage

All items delivered and placed into storage shall be stored with protection from weather, humidity, and temperature variation, dirt and dust, or other contaminants.

1.4.3 Protection of Fixed/Fabricated Manufactured Equipment

Fiberboard or plywood shall be taped to surfaces as required by equipment shape and installation access requirements.

1.4.4 Prohibited Use of Equipment

Food service equipment shall not be used as tool and material storage, work bench, scaffold, or stacking area.

1.4.5 Damaged Equipment

Contractor shall immediately submit documentation to the Contracting Officer with a recommendation of action for repair or replacement and the impact on project schedule.

PART 2 PRODUCTS

2.1 MATERIALS

Materials shall conform to the following:

2.1.1 Black Iron Pipe

ASTM A 53.

2.1.2 Brass Pipe

ASTM B 43.

2.1.3 Chromium Plating of Brass Pipe, Valves, and Fittings

ASME A112.18.1M.

2.1.4 Copper Tubing

ASTM B 88, Type K or L, or ASTM B 75, as required to suit application.

2.1.5 Stainless Steel, Nonmagnetic

ASTM A 167 or ASTM A 240: 18-8, Type 302, polished to No. 4 finish unless noted otherwise.

2.1.6 Stainless Steel Pipe and Tubing

Pipe and tubing shall be seamless or welded, of the gauge specified, of true roundness, and of material as specified for stainless steel. Seamless tubing shall be thoroughly annealed, pickled, and ground smooth. Welded

tubing shall be thoroughly heat-treated, quenched to eliminate carbide precipitation and then drawn true to size and roundness, and ground. Tubing shall be given a No. 3 or 4 finish when exposed to view.

2.1.7 Fittings for Copper Tubing

Fittings on tubing shall be of solder-joint type. Flared joint fittings may be used in specific applications when approved. Cast-bronze solder joint fittings shall conform to ASME B16.22. Cast-bronze fittings for flared joints shall conform to ASME B16.26.

2.1.8 Fittings for Brass Pipe

ASME B16.15 shall be as required for application.

2.1.9 Galvanizing Repair Compound

ASTM D 520, Type I.

2.1.10 Silver Solder

AWS A5.8, class shall be as applicable.

2.1.11 Steel Structural Shapes for Framing

ASTM A 36. Structural shapes shall be uniform, ductile in quality, and shall be free of hard spots, runs, checks, cracks and other surface defects. Sections shall be galvanized by the hot-dip process, conforming to ASTM A 123, coating designation G-90.

2.1.11.1 Paint and Coatings

Paint and coatings shall be of a durable, nontoxic, nondusting, nonflaking, and mildew-resistant type, suitable for use with food service equipment and in conformance with NSF Std 2. Application shall be in accordance with the recommendations of the manufacturer.

2.1.11.2 Exterior Parts

Exterior, galvanized parts, exposed members of framework, and wrought steel pipe, where specified to be painted, shall be cleaned, degreased with mineral spirits, and primed with rust inhibiting primer, and finished with two coats of epoxy-based gray hammertone paint, unless otherwise specified.

2.1.12 Tin-Antimony Solder

ASTM B 32, Composition Sb5.

2.2 CONSTRUCTION OF FABRICATED EQUIPMENT

2.2.1 Welding

2.2.1.1 Welding Rods

Welding shall be done with welding rods of the same composition as the sheets or parts welded.

2.2.1.2 Weld Quality

Welds shall be strong and ductile. Welds shall be free of imperfections such as pits, runs, spatter, cracks, and shall be finished to have the same color as the adjoining surfaces. Butt welds made by welding straps under seams, or by filling in with solder, or by grinding will not be acceptable. Welded joints shall be homogeneous with the sheet metal. Spot welding shall not be substituted for continuous welding. Joints in tops of counters, tables, drainboards, exposed shelving, and sinks shall be joined by heli-arc welding or a process other than carbon-arc welding or one that will permit carbon pick-up. Joints shall be fully welded. Counter tops shall be factory welded into lengths as long as practical in order to reduce field welded joints to a minimum. All welds shall be ground smooth and free of burrs and sharp edges. Wherever welds occur on nonfood contact surfaces not suitable for grinding or polishing, such welds and the accompanying discoloration shall be sandblasted and coated in the factory with a nontoxic metallic-base paint. Bolts and screws shall be welded by a process that will minimize the possibility of carbide precipitation. Welds in galvanized steel made after galvanizing, and the adjacent areas where galvanizing is damaged, shall be cleaned and coated with galvanizing repair compound.

2.2.2 Soldering

Soldering shall serve only as a filler to prevent leakage and shall be made with tin-antimony solder. Stainless steel requiring soldering shall first be cleaned of discoloration and then have a soldering flux applied. Excess or remaining flux shall be washed clean after the soldering has been completed, and the entire soldered joint and adjacent metallic surfaces shall be cleaned with a liquid alkaline or neutralizing agent to prevent any attack on the surrounding metallic surfaces by the soldering flux.

2.2.3 Brazing

Brazing shall be accomplished with silver solder. Brazing shall be used only on copper tubing to brass and bronze connection fittings. Steam coils requiring dip-tinning shall first be brazed with all surplus flux removed so that metal is exposed and then tinned.

2.2.4 Grinding, Polishing, and Finishing

Exposed welded joints shall be ground smooth and finished to match the adjoining material. Wherever materials have been depressed or sunken by welding operation, such depressions shall be hammered and peened flush with the adjoining surface, and again ground to eliminate high spots. Ground surfaces shall then be polished or buffed to match adjoining surfaces. Care shall be exercised in the grinding operations to avoid excessive heating of the metal and metal discoloration. Abrasives, wheels, and belts used in grinding shall be free of iron and shall not have been used on carbon steel. In all cases, the grain of rough grinding shall be removed by several successively finer polishing operations. The texture of the final polishing operation shall be uniform, smooth, and consistent. The grain direction of horizontal stainless steel surface shall be longitudinal, including the splash back. Polishing at right angle corners shall provide a mitered appearance. Butt and contact joints shall be close fitting and not require solder as a filler. Wherever brake bends occur, the bends shall be free of open texture or orange peel appearance. Where brake work does mar the uniform appearance of the material, such marks shall be removed by grinding, polishing, and finishing. Sheared edges shall be free of burrs, projections, and fins. Where miters or bullnosed corners occur, such miters and corners shall be finished with the underage

of the material and ground to a uniform condition. Overlapping of material is not acceptable. Exposed stainless steel surfaces shall have a No. 3 or 4 finish. Finishes of materials, other than stainless steel, shall be comparable in appearance to commercial mill finish. Exposed surfaces shall include:

a. Exterior surfaces exposed to view.

b. Interior surfaces exposed to view in doorless cabinets.

c. Undersides of shelves shall have a ground finish of No. 90 grit or finer.

2.2.5 Chromium Plating

Chromium plating, where used, shall be applied over nickel plating.

2.2.6 Fastening Devices

Fastening devices shall be of the same material as the metal being joined when joint pieces are of similar metal. Fastening devices shall be stainless steel when stainless steel is joined to dissimilar metal. Stud bolts shall be 1/4-20 stainless steel with length necessary to accept washers, lock washers, and required nuts, and shall be welded 225 mm on center maximum. Exposed surfaces of equipment shall be free of bolts, screws, and rivet heads. Stainless steel stud bolts shall be used to fasten tops of counters or tables to angle framing and trim to other surfaces. Such bolts shall be of the concealed type. Threads of stud bolts which are on the inside of fixtures and are either visible or might come in contact with a wiping cloth, shall be capped with chrome plated washers, lock washers, and chromium-plated brass cap nuts. Wherever bolts are welded to the underside of trim or tops, the reverse side of the welds shall be finished uniform with the adjoining surface of the trim or the top. Dimples at these points will not be acceptable.

2.3 COUNTERS

Counters shall be constructed in accordance with applicable portions of NSF Std 2.

2.3.1 Counter Tops

Counter tops shall be constructed of 1.9 mm (14 gauge) stainless steel with all seams and corners welded, ground smooth, and polished.

2.3.2 Cafeteria Counters

Cafeteria counters shall be constructed and sound deadened as indicated and as specified for counters.

2.3.3 Pitch and Drainage of Equipment Surfaces

Wherever a fixture has a waste or drain outlet, the surface shall have a distinct pitch toward such outlet. Corners shall be coved on 19 mm radius and sloped 10 mm per m maintaining level crown at front edges of rolled rims, marine edges, and backsplashes, when tops are sloped to drains.

2.3.4 Drip Gutter

Drip gutter shall be an integral part of the counter top and located below beverage dispensing faucets where indicated. Drip gutter shall be provided with a 25 mm brass drain tube centered in the bottom of the gutter. Bottom shall be pitched to the drain. The drip gutter shall be 100 mm wide, 25 mm deep, and the length indicated. The drip gutter shall be provided with a 100 mm wide, 25 mm high, removable, nonsplash, stainless steel, wire mesh strainer with frame. A cold water flush inlet fitting shall be installed at one end of the gutter, and shall have a faucet with quick disconnect connection mounted under the top.

2.3.5 Counter Edges and Backsplashes

2.3.5.1 Counter Edges

Counter edges shall be one of the following types:

a. Turned Down: Fifty mm at 9O degrees with 19 mm tight hem at bottom. Free Corners shall be rounded on 19 mm radius.

b. Marine Edge: Turned up 13 mm and 38 mm at 45-degree angle and turned down 50 mm at 135 degree angle with 19 mm tight hem at bottom.

c. Rolled Rim: Coved up 75 mm with 38 mm wide rim rolled 180 degrees and turned down to table top; hem edges, and bullnose corners.

2.3.5.2 Counter Backsplash

Counter backsplash shall be one of the following types:

a. Coved up 250 mm and sloped back 38 mm at the top on a 45-degree angle; 63 mm slope where piping occurs. Turned down 25 mm at 135 degrees at the rear of the splash with the ends closed to the bottom of the top turn down. Splash turn down shall be secured to wall with 100 mm long, 1.9 mm (14 gauge) stainless steel "zee" clips anchored to wall, 900 mm on center.

b. Turned up 150 mm at 90 degrees on 16 mm radius with edge turned back 25 mm at 90-degree angle with 25 mm turn down at 90 degrees at rear of splash with the ends closed to the bottom of the top turn down. Splash turn down shall be secured to wall with 100 mm long, 1.9 mm (14 gauge) stainless steel "zee" clips anchored to wall, 900 mm on center.

c. Turned up 150 mm at 90 degrees on a 16 mm radius with edge turned back 50 mm at 90 degree angle with the ends closed to the bottom of the top turn down. Splash turn down shall be secured to wall with 100 mm long, 1.9 mm (14 gauge) stainless steel "zee" clips anchored to wall, 900 mm on center.

2.3.6 Counter Top Support Angles

Counter top support angles shall be of 38 mm by 38 mm by 3 mm painted galvanized steel angles with all corners mitered, welded, and ground smooth at perimeter. Cross members shall be provided on 600 mm centers maximum. A 100 mm by 100 mm, 2.7 mm (12 gauge) stainless steel triangular pad shall be provided where leg gussets are welded to the frame. Angle frame shall be stud bolted to counter top.

2.3.7 Sound Deadening of Counters

Counter tops shall be sound deadened with 13 mm wide rope sealant positioned continuously between all contact surfaces of the frame-members and the underside of counter top, overshelves and undershelves. Stud bolts shall be tightened for maximum compression and the excess sealant trimmed.

2.4 COUNTER BASES

Counter bases shall be open or closed as indicated.

2.4.1 Closed Bases

Closed bases shall be constructed with 38 mm by 38 mm, 3 mm galvanized steel angle with all corners mitered, welded, and ground smooth. Horizontal and vertical angles shall be provided on 600 mm centers or less. The enclosure panels on closed bases shall be of 1.3 mm (18 gauge) stainless steel NSF Std 35. Joint trim on enclosed bases shall be 50 mm wide, 1.9 mm (14 gauge) stainless steel, attached with concealed stud bolts and sealed to interior partition. Enclosed bases shall be double walled on interior, exposed ends, and at interior exposed partitions. Service access shall be provided for utilities supplying equipment designed to fit atop the counter.

2.4.2 Open Bases

Open bases shall be constructed of 41 mm outside diameter, 1.6 mm (16 gauge) stainless steel rails welded 360 degrees to the legs.

2.4.3 Gussets

Gussets shall be stainless steel, fully enclosed, a minimum of 75 mm in diameter at the top, reinforced with a bushing, and shall be continuously welded to channel or angle.

2.4.4 Legs

Legs shall be of 1.6 mm (16 gauge), 41 mm outside diameter stainless steel tubing. Legs shall be continuously welded to gussets, channel, or angle as specified.

2.4.5 Feet

Feet shall be sanitary, die-stamped stainless steel bullet-shaped, fully enclosed and shall provide for a 25 mm adjustment. The bottom of the legs shall be finished off smoothly and the stem overlapped to provide a sanitary closed fitting. Feet for free-standing fixtures requiring utility connections shall be as above except with a flanged plate at the bottom which shall be anchored to the floor with noncorrosive bolts.

2.4.6 Undercounter Shelving

2.4.6.1 Open Base Shelves

Open base shelves shall be constructed of 1.6 mm (16 gauge) stainless steel with all edges turned down 38 mm at 90 degrees with a 19 mm tight hem at bottom. Corners shall be notched a full 90 degrees and welded from underside to completely fill the gap, ground and polished. Undershelf

shall be braced with 25 mm by 100 mm, 1.9 mm (14 gauge) stainless steel channel at longitudinal center line and between each intermediate pair of legs.

2.4.6.2 Closed Base Shelves

Interior shelves on closed bases shall be constructed of 1.6 mm (16 gauge) stainless steel. Side edges of the shelf shall be turned up 50 mm at 90 degrees on a 6 mm radius and sealed to the side walls. Rear of the shelf shall be coved up at 90 degrees on a 16 mm radius to shelf above or counter top, flanged out for attachment with no open space at interior. Vertical joints shall be sealed. Front edge shall be turned down 50 mm at 9O degrees with a 19 mm tight hem. The vertical seam of shelf turn down/turn up shall be welded to the face of body partition. Maximum depth of shelves shall be 550 mm. Shelves shall be reinforced with 25 mm by 100 mm, 1.9 mm (14 gauge) stainless steel closed hat channel. Shelf slides, where indicated, shall be 1.9 mm (14 gauge) stainless steel, 38 mm by 38 mm angles, and shall have front and back corners rounded and finished smooth.

2.4.7 Tray Slides

Tray slides shall be solid type. The width of the tray slides shall be as shown. The mounting height of the tray slides shall be as indicated above the finished floor. Tray slides shall be installed true and level. Tray slide shall be designed and installed to preclude tray spillage.

2.4.7.1 Solid Type Slide

Solid type slide shall be constructed of 1.9 mm (14 gauge) stainless steel as indicated. Ends of the slide shall be closed to eliminate sharp edges.

2.4.7.2 Support Brackets

Support brackets for tray slides shall be stainless steel, and shall be secured to the trim strip of the counter with stainless steel truss head bolts. Brackets shall not be spaced more than 1200 mm, center to center.

2.4.8 Protector Shelf

Protector shelf shall be installed on the serving line counters and shall be located over the equipment as indicated.

Protector/serving shelf shall be constructed of 1.6 mm (16 gauge) stainless steel, with a minimum width of at least 300 mm, and shall have a full 25 mm skirt with 19 mm tight hem on all sides and shall be supported on stainless steel uprights, at front. All free corners shall be rounded on a 19 mm radius.

2.4.8.1 Heat Lamps

Heat lamp units shall be provided with consolidated chassis of longest possible length for multiple sections. Heat lamp units shall have integral incandescent display light with warm white lamps, and shall be wired to a recess mounted pilot light and infinite control for each separate section. Heat lamps shall be secured tightly to the underside of the serving shelf and shall have a "USDA" approved thermal breaker provided between the heat lamps and the shelf the full size of heat lamp chassis. Each 600 mm heat lamp section shall be located above two food wells. Maximum allowable temperature at the top of a serving shelf shall be 49 degrees C.

2.4.8.2 Fluorescent Display Light Modules

Fluorescent display light modules (not included with heat lamps) shall be in 450 mm and 900 mm increments, each with warm white lamps. Display lamps shall be wired to a single recess mounted master switch per serving shelf.

2.4.8.3 Heat Lamp/Display Wiring

Heat lamp/display wiring shall be concealed in a corner post.

2.4.8.4 Protector Glass

Protector glass sheet shall be no less than 6 mm thick in transparent, tempered plate glass or heat- and mar-resistant clear acrylic framed in an all welded stainless steel channel edging and shall be installed under the protector shelf and in front of the food display. At the top and bottom of the installed glass shall be a 25 mm space for vapor venting. The protector glass or clear acrylic shall be pivoted for easy cleaning. Design shall be such that glass or clear acrylic can be replaced in the event of breakage.

2.4.8.5 Breath Protector

Breath protector/self serve shall be constructed of 1.6 mm (16 gauge) stainless steel, with a minimum width of at least 300 mm and shall have a full 25 mm skirt with 19 mm tight hem on all sides and shall be supported on stainless steel uprights at front. All free corners shall be rounded on 19 mm radius.

a. Adjustable louver brackets below the top shall be fitted with 6 mm polished, tempered plate glass or heat and mar-resistant clear acrylic framed in an all welded stainless steel channel and shall be installed with a 175 mm clearance above counter top.

b. Fluorescent light fixtures shall be installed the full length of the undershelf with warm white lamps. Display light wiring shall be concealed in a corner post. Fixtures shall be prewired to a single recess-mounted master switch per serving shelf.

2.5 DISH COUNTERS

Dish counters shall be constructed and sound deadened as indicated and as specified for counters. The dish counters shall be fitted and flanged into the dishwashing machine with a water-tight joint.

2.5.1 Dish Counter Support Channels

Dish counter support channels shall be 25 mm by 100 mm by 25 mm, 2.7 mm (12 gauge) stainless steel. Channels shall be provided under dish counter top between each pair of legs and shall have closed ends. Cross members, on the centerline, shall be provided between legs. Channels shall be stud-bolted to counter top at 150 mm on center, maximum.

2.5.2 Dish Counter Components

2.5.2.1 Scupper Drain

Scupper drain shall be provided the full width of dish counter with all corners coved, 150 mm wide by 50 mm deep, and integrally welded to the soiled/clean dish counter top at the entrance/exit of a rack-type dishwash machine. Bottom of the scupper drain shall be scored and sloped to 38 mm brass drain with tailpiece. Removable drainer shall be 1.6 mm (16 gauge) stainless steel, flush-mounted, pan-formed, perforated top, shall have 13 mm holes punched 38 mm on center, and shall be installed in the scupper opening on 13 mm diameter stainless steel legs with closed ends.

2.5.2.2 Prerinse Spray

A prerinse spray assembly shall be mounted on the backsplash of the dish counter with vertical tubing, wall bracket, flexible gooseneck hose, and self closing squeeze-type valve and spray.

2.5.2.3 Hose Bib Faucet

A hose bib faucet shall be mounted on a 2.7 mm (12 gauge) stainless steel flange or inverted gusset below top of counter, which shall be ground and polished to match counter top.

2.5.2.4 Undershelves

Undershelves shall be the solid type, and shall be constructed as specified for open base shelves.

2.5.2.5 Scraping Trough

Scraping trough in the soiled dish counter shall be 1.9 mm (14 gauge) stainless steel with all corners coved, and shall be integrally welded to the dish counter. Two hundred millimeter wide trough shall be sloped from 100 mm depth to integral disposer or prewash sink. Long sides of trough shall be formed on a 60 degree angle with a 13 mm by 13 mm recessed shoulder at juncture of the dish counter. Removable trough covers shall be 197 mm by 500 mm, 1.6 mm (16 gauge) stainless steel, pan formed, and the top shall be perforated (13 mm diameter holes punched 38 mm on center). One trough cover shall be provided for each 900 mm of trough. One inlet fitting shall be installed at the shallow end of the scraping trough, and intermediate inlet fittings shall be installed at 1200 mm on center. Inlet fittings shall be piped to a blending valve, vacuum breaker, solenoid valve, and shall have a globe valve at each intermediate inlet. Integral disposer sink shall be 450 mm by 450 mm by 188 mm deep, 1.9 mm (14 gauge) stainless steel with all corners coved, welded to dish counter/scraping trough and shall be fitted with a removable silverware-trap. Removable flush cover shall be 1.6 mm (16 gauge) stainless steel, 13 mm pan-formed, and perforated (13 mm holes punched at 38 mm on center) with welded corners. A finger ring shall be provided for the removal of the cover. Support clips shall be 6 mm diameter stainless steel rod, 50 mm long, formed at 45 degree angle with two 19 mm leg ends (6 mm long threaded ends). Rod-clips shall be inserted through tight clearance holes in sink corners, and sealed watertight and shall be secured with stainless steel acorn-nuts or tack-welded at exterior of sink wall. Support clips shall be set for a flush cover position (approximately 13 mm below top). A solenoid valve shall be interconnected with the disposer delay-relay control to initiate the blended water flow when the disposer is activated. All inlet fittings shall have 13 mm copper tubing from blending valve to inlet fittings. Exposed fittings shall be chrome plated.

2.5.3 Glass/Cup Rack Overshelf

Glass/cup rack overshelf shall be 1.9 mm (14 gauge) stainless steel with a 38 mm deep "Vee" trough at free long sides with a 25 mm tight hem at inside of trough. A 13 mm marine edge shall be provided at free ends and a 100 mm high splash at the wall.

a. Shelf shall be suspended at 450 mm above counter top.

b. Drain tubes shall be provided at each end of trough through the backsplash to 19 mm above top of table.

c. A horizontal rack rest of 41 mm outside diameter stainless steel tubing shall be provided the full length of the shelf and shall be supported 250 mm above the shelf on 31 mm outside diameter stainless steel tubing spaced at 1500 mm on center.

2.5.4 Dish/Tray Return Shelf

Dish/tray return shelf shall be sized as indicated on the drawings. Shelf shall extend through opening in wall to be flush with the wall at the deposit side. Shelf shall be turned down 25 mm at 90 degrees at the front with 19 mm return at bottom. Rear long side shall be turned down 25 mm at 90 degrees, and shall be integral with dish counter whenever adjacent.

2.6 SINKS

Sink shall be of the dimensions indicated and conform to the applicable requirements of NSF Std 2. Sinks shall be constructed of a minimum of 1.9 mm (14 gauge) stainless steel. Vertical and horizontal corners shall be rounded to a radius of not less than 19 mm with double walls at partitions. Continuous 1.9 mm (14 gauge) stainless steel exterior filler panels shall be provided between compartments of multiple-compartment sinks and shall be ground and polished to match the adjacent surfaces. The sink bottom shall be scored and sloped to assure drainage to the waste outlet. Sinks shall be equipped with waste and overflow fittings, drain plugs with quick-opening valves, and faucets of the type specified. Faucet and drain plug, and overflow fitting shall be required for each sink compartment, unless otherwise indicated. Spout outlet of faucets shall be a minimum of 125 mm above the rim of the sink. Sink legs shall be as specified for counters, except that closed gussets shall be welded to the support channels. Sinks installed adjacent to walls or enclosures shall be anchored and sealed thereto. Sinks shall be sound-deadened as specified for counters.

2.6.1 Plumbing/Trim Requirements

2.6.1.1 Drain Plug Fittings

Drain shall consist of a 38 mm quick opening brass body valve with a stainless steel twist lever handle. Removable perforated stainless steel strainer plate shall be not less than 75 mm in diameter.

2.6.1.2 Backsplash-Mounted Faucets

Backsplash-mounted faucets shall be combination fitting-type with an exposed body and concealed supply connections at the back of the sink. Fitting shall have a swinging spout of approximately 200 mm in length and inlets with 19 mm pipe thread. Faucets shall have adjustable flanges.

Valves shall have indexed metal lever handles and replaceable seats.

2.6.1.3 Counter Top or Ledge-Mounted Faucets

Counter top or ledge-mounted faucets shall be combination fitting-type with a concealed body and with the supply connections under the sink ledge or counter top. The faucets shall have replaceable valve seats, swinging spout elevated to clear valve handle, and four-arm or lever-style indexed metal handles. Chrome-plated copper alloy or stainless steel escutcheons for valves and spout, locknuts and washers or lock-nut type escutcheons together with coupling nuts, and 13 mm pipe size union-tailpieces shall be provided.

2.6.1.4 Backflow Preventers

Backflow preventers shall be provided at each item of food service equipment having a water supply and waste connections, where the water inlet is connected below the flood level of the equipment. Backflow preventer shall be supplied of a size and proportion that will allow an ample flow of water to the equipment, but will prevent the backflow of waste or polluted water into the water supply system. Backflow preventers shall be as specified in Section 15400 PLUMBING, GENERAL PURPOSE.

2.6.1.5 Connected Overflows

Faucets, and drains with connected overflows, unless otherwise indicated, shall be provided for all sinks.

2.6.1.6 Water-Fill Faucets

Specialty food service water-fill faucets or hose assemblies shall be provided as indicated in drawings/specifications.

2.6.1.7 Water Hammer Arresters

Water hammer arresters shall be provided for food service equipment with quick-opening or solenoid-operated water valves. Each unit shall be installed in a vertical position.

2.6.1.8 Control Valve Mountings

Gusset-shaped 1.9 mm (14 gauge) stainless steel panel for the control valves shall be mounted on open base fixtures with 88 mm setback from the countertop edge/rim to the valve handle.

2.6.2 Pot Washing Sinks

2.6.2.1 Final Rinse Compartment

The final rinse compartment of the pot washing sink shall be equipped for sanitizing, using a chemical injector and a wall mounted automatic metered pump.

2.6.2.2 Temperature Gauge

Temperature gauge shall have a 75 mm diameter face with stainless steel flange.

2.6.2.3 Valves, Temperature Gauge, and Controls Mounting

Valves, temperature gauge, and controls shall be installed in a stainless steel recessed panel, ready for final connections. A perforated stainless steel casing shall be provided over the temperature bulb.

2.6.2.4 False Bottom

False bottom shall be constructed of 1.9 mm (14 gauge) stainless steel, 13 mm deep pan formed with a perforated top (13 mm holes punched 38 mm on center), and shall have welded corners and finger rings. False bottom shall be fitted with 50 mm high by 31 mm outside diameter tubular stainless steel feet with closed ends.

2.6.2.5 Electric Water Heater

Electric water heater shall be a 15 kw heater and shall have a cement or glass-lined tank and shall produce not less than 0.11 L per second of 82 degrees C water with a 21 degrees C temperature rise and shall have a storage capacity of 60 L. The unit shall be preplumbed and prewired at the factory and shall have immersion type heating elements, thermostat, and high temperature limit switch. The heater shall be provided with a temperature gauge, pressure gauge, and low water cut-off switch. The tank shall be suitable for 1.035 MPa working pressure and shall be factory tested at 2.07 MPa. The body, base, and legs shall be constructed of a minimum of 400 series stainless steel. The legs shall be adjustable.

2.6.3 Cutlery and Excess Liquid Sinks

Cutlery and excess liquid sinks shall have a removable standpipe overflow, in lieu of an overflow in the back of the sink. The overflow shall be installed in the corner of the sink compartment. Compartments shall be provided with snug-fitting removable basket strainers. Drain plug with quick-opening valve shall be arranged for operation from the work side of the counter.

2.7 FOOD WASTE PULPING SYSTEM

The food waste pulping system shall be a remote type and consist of two food waste disposers, two food waste pulpers and one food waste water press. The disposers and pulpers shall be connected to the water press through a piping system. The piping system and equipment shall be designed by the food waste pulping system manufacturer.

2.8 FOOD WASTE DISPOSER

a. The food waste disposer shall be used in conjunction with the food waste water press. The disposer shall be furnished with a minimum 2238 watt (3hp) slurry pump to pump the waste to the water press. The disposer shall have the capability of grinding a minimum capacity of 181 kg (400 lbs) per hour of food scraps only. Hobart Model FD3-300 or approved equal.

b. The unit shall be furnished complete with a 460 mm (18 inch) diameter stainless steel inlet cone that shall be welded into the stainless steel countertop, minimum 2238 watt (3 hp) disposer motor, slurry pump, minimum 2238 watt (3hp), slurry line check valve, valve package for the fresh water inlet, control panel, push button station and all other appurtenances required for installation. The valve package for the fresh water inlet shall include a solenoid valve, shut

off valve and vacuum breaker.

2.9 FOOD WASTE PULPER

a. The food waste pulper shall be used in conjunction with the food waste water press. The pulper shall be furnished with a minimum 2238 watt (3hp) slurry pump to pump the waste to the water press. The pulper shall have the capability of grinding a minimum capacity of 408 kg (900 lbs) per hour of food scraps, plastics, milk cartons, paper, aluminum foil and cardboard. Hobart Model WS-1000 or approved equal.

b. The unit shall be furnished complete with pulping tank, minimum 2238 watt (3hp) pulping motor, feed trough connection, slurry pump, minimum 2238 watt (3hp), slurry line check valve, backflow preventer for fresh water inlet, slurry return line shut off valve, motorized valve and throttling valve, drain valve, and all other appurtenances required for installation.

2.10 FOOD WASTE WATER PRESS

a. The water press shall be used in conjunction with the food waste disposers and pulpers to extract water from the slurry and discharging the semi-dry pulp to a dumpster. The water extracted from the slurry shall be recycled and returned to the disposers and pulpers by a minimum 3730 watt (5hp) slurry return pump. The water press shall have a minimum capacity of 1179 kg (2600 lbs) per hour of food service waste consisting of food scraps, plastics, milk cartons, paper, aluminum foil and cardboard. Hobart Model W-59 or approved equal.

b. The water press shall be constructed of stainless steel and be furnished complete with water press motor, slurry return pump set and motor, control panel, discharge chute, 100 mm (4") diameter slurry inlet and return outlet connections, slurry return line check valve, fresh water screen flush valve package, drain line valve assembly and all other appurtenances required for installation. The fresh water screen flush valve package shall consist of a shut off valve, backflow preventer, and solenoid valve. The drain line valve assembly shall consist of a motorized valve and shut off valve.

2.11 DRAIN TRENCH LINER/GRATING

Drain trench liner/crating shall be of 1.9 mm (14 gauge) stainless steel in sizes as indicated and flanged out for attachment to the slab.

2.11.1 Interior of the Liner

Interior of the liner shall be as shown with corners coved on 19 mm radius; sloped 25 mm to an integrally welded box pattern drain (drain housing only). Drains shall be fitted with 150 mm long welded tailpiece. A safety chain shall be connected to the basket strainer assembly and the top of the liner wall.

2.11.2 Stainless Steel Grating

Stainless steel grating shall be removable, without the use of tools, with 25 mm by 5 mm (l" x 3/16") treads as shown. Section quantities and sizes shall be as indicated on the drawings with a maximum of 600 mm long sections.

2.12 HOODS

Design, fabrication, air flow rate and installation of hoods and duct systems shall conform to ACGIH-01, NFPA 96, and UL 710, where applicable to automatic washdown hood systems. These standards represent only the minimum requirements; subsequent subsections of this clause may require construction that exceeds these minimum requirements. Hood duct systems, grease removal devices, and cooking which may be a source of ignition of grease in the hood or duct, shall be protected with fixed pipe systems and provided with portable fire extinguishing equipment in accordance with NFPA 96, NFPA 17A, and as specified. Unless otherwise specified, ducts and hoods shall be secured to building so as to be level and free from vibration under all conditions of operations. Supply and installation of exhaust fans for food service equipment and exhaust hoods shall be as specified in Section 15895 AIR SUPPLY, DISTRIBUTION, VENTILATION, AND EXHAUST SYSTEM.

2.12.1 Exhaust Hood Connections Provisions

2.12.1.1 Exhaust Duct for Canopy or Noncanopy Hoods

Exhaust duct for canopy or noncanopy hoods shall be constructed of 1.3 mm (18 gauge) stainless steel and shall have all external seams welded continuously, liquid-tight. Duct size shall be based on a minimum air velocity of 7.6 m per second and maximum of 12.7 m per second. Duct shall be continuously welded, liquid tight, to hood duct collar as required by NFPA 96.

2.12.1.2 Hood Support

Wall mounted or island type hoods shall be supported from the ceiling structure with stainless steel mounting brackets provided with hoods. Hanger rods shall be 13 mm diameter stainless steel, threaded at the bottom and designed at the top to fit into inserts in building slats above or shall have hanger attachments fastened to structural steel members. Hanger rods shall be spaced 1200 mm on center, maximum.

2.12.1.3 Make-Up Air Untempered

The air volume which is exhausted from a kitchen shall be replaced as required by NFPA 96. A fire activated damper of at least the same gauge as the hood shall be installed in the supply plenum at the same plane as the external weld. Air supplied upstream of the hood suction opening does not qualify as make-up air. The exhaust air flow rate for ventilation of cooking equipment shall be drawn through the open area between cooking surfaces and the perimeter entrance of the hood. Make-up air diffusers shall be provided at the front panel, the exterior length of the hood producing a low velocity discharge. The supply air plenum shall have 25 mm thick foil-faced fiberglass insulation at interior of plenum. The temperature differential between make-up air and the air in the conditioned space shall not exceed 5 degrees C, except air that is part of the air conditioning system or air that does not decrease comfort conditions of the occupied space.

2.12.1.4 Hood Lights and Wiring

This section shall provide as indicated on the drawing, vapor proof incandescent fixtures. The light fixtures shall be prewired to junction box in the hood.

2.12.1.5 Closure Panels

Vertical corner mullions, at removable closure panels, shall be 50 mm by 50 mm wide, 1.6 mm (16 gauge) stainless steel, and shall be welded integrally to the furring and head channel. Exhaust hood closure panels shall be 13 mm pan-formed, 1.3 mm (18 gauge) stainless steel. Upper edge of panels shall be retained in 25 mm by 50 mm continuous 1.6 mm (16 gauge) stainless steel head channel secured to the hood superstructure. Lower edge of panels shall be mounted on perimeter furring cap, and shall be turned back 25 mm and flanged up 25 mm for "zee" clip retention.

2.12.1.6 Wall Panels

Double pan-formed wall panels shall be 1.3 mm (18 gauge) stainless steel, 13 mm thick with internal stiffener members. The panels shall be filled with a "USDA Approved" thermal insulation the full height and width of panels, and shall be attached to the interior with mastic. Maximum allowable temperature at rear side of panel shall be 49 degrees C.

a. Level and square lower edge and sides.

b. Butt joint all panels.

2.12.2 Grease Extracting Exhaust Hoods Over Cooking Equipment

Grease extracting exhaust hoods shall be pre-engineered, factory fabricated and assembled with built-in fire protection and washdown systems. Grease extracting exhaust hoods shall be UL listed as a grease extractor for exhaust ducts in accordance with UL 710. Hoods shall conform to the requirements of NFPA 96. Grease extracting exhaust hoods shall be of the size and type as indicated and shall be welded as required by NFPA 96 to the exhaust ductwork. A fire system cabinet shall be furnished to contain the release assembly and wet chemical fire suppression tanks. The cabinet shall be attached to the end of the hood and fabricated of stainless steel. The cabinet shall be furnished with an access door.

2.12.2.1 Construction

Construction shall be entirely of stainless steel. Grease extraction chamber and exhaust capture chamber shall be not less than 1.3 mm (18 gauge) stainless steel. All seams or joints inside the capture area of the hood shall be continuously welded, with the weld ground and polished to match the adjacent finish. The vertical joint where the front outside face of the hood meets the end panel of the hood shall be continuously welded, with the weld ground and polished to match the adjacent finish. All other joints or seams shall be mechanically sound in accordance with the hood manufacturer's listing procedure. Hoods over 3.6 m in length may be provided in multiple, equal-length sections for mounting end to end; no section shall be less than 1.8 m in length. Hoods comprised of multiple sections shall be factory preassembled and provided with predrilled mounting holes and stainless steel fasteners. Field joints inside the capture area and field joints exposed to view shall be welded, ground and polished to match the adjacent finish. Hoods shall be factory preplumbed and prewired and shall have a single connection point. Hoods built in multiple sections shall be furnished with unions and junction boxes for field connections. Canopy-type grease extracting exhaust hoods shall be of the overhead type suitable for wall mounting. Island-type grease extracting exhaust hoods shall be canopy-type hoods mounted back-to-back

for ceiling mounting over exhaust hoods shall be designed for installation over griddle, fryers, and ranges and shall be of the roof mounting type.

2.12.2.2 Pass-Over-Type

Pass-over-type grease-extracting exhaust hoods shall be designed for installation over griddles or fryers on service lines where prepared foods will be passed over the hood. Hoods shall have end exhaust outlet with upward direction. Hood shall be designed so as to prevent carbonization of grease extraction chamber.

2.12.2.3 Automatic Washdown System

Automatic washdown system shall be provided for each grease extracting exhaust hood or group of hoods served by a common exhaust fan and shall be controlled by a pushbutton control station. The washdown system shall remove accumulations of grease and other cooking process contaminants from the internal hood surfaces using a hot-water and detergent solution. The washdown system shall operate using water at a temperature of not less than 60 degrees C, at a flow pressure of 275 kPa minimum. A pressure reducing valve, when supply line pressure exceeds 345 kPa, shall be provided ahead of the hood control panel. The hood shall have within the grease extraction chamber a full length stainless steel tube header with brass spray nozzles, located to remove accumulated grease deposits during the hood wash cycle. Plumbing of associated components for the hood washdown system, shall include a 1/4 turn ball-type shut-off valve conforming to MSS SP-72 or MSS SP-110, temperature/pressure gauge, water hammer arrester, line strainer, solenoid valve, flow check valve, detergent inlet fitting with check valve, detergent pump, detergent tank, and pump test switch. Plumbing and detergent components shall be located within a factory prewired and prewired control enclosure. All hot-water piping within control enclosure shall be copper tubing. All electrical components shall be factory prewired to common terminal blocks. A vacuum breaker shall be furnished for the hot-water/detergent supply line from the control enclosure to the hood connection point. The control enclosure shall be mounted as indicated. The wash water and grease shall be collected within the hoods, piped to the outside of the hoods, and interconnected to the building plumbing system through an air-gap hub assembly. Operation shall be by a control system, including indicator lights, timing relay adjustable from a minimum of 1 to 10 minutes, control relays and terminal blocks. "START" button shall start the exhaust fan and "STOP" button shall stop the exhaust fan and activate the timed wash cycle. The pushbutton control station shall be mounted as indicated.

2.12.2.4 Internal Fire Protection System

Each grease extracting hood shall be provided with an internal fire protection system as required by NFPA 96 and local fire marshall regulations. In the event of a fire or overheat situation in excess of 138 degrees C, fusible links located in the supply duct collars shall melt and automatically release a self closing, stainless steel fire damper, sealing the supply ducts. Exhaust fan shall continue to operate after the extinguishing system has been activated unless fan shut down is required by a listed component of the ventilation system or by design of the extinguishing system. Each damper shall have a manual control device for the purpose of resetting the damper to its normal position after activation. The reset level shall not be located greater than 2.1 m above the finished floor. Once the temperature reaches a safe level, the damper control shall be used to manually raise the fire damper without the removal

of any inspection doors or use of tools. Each fire protection system shall be provided with a remote pull station mounted as indicated. Grease extracting hoods shall be furnished prepiped by hood manufacturer at the factory with piping and nozzles for a fire protection system providing coverage of the cooking surfaces below the hood. All exposed piping and fittings shall be chrome-plated or stainless steel sleeved. Exposed pipe threads in/above the food zone shall not be acceptable. Field installation shall be limited to detection lines with chrome sleeves where exposed, remote pull station, and connecting piping from the container holding the fire extinguishing agent. Hand held fire extinguishers shall be located at each exhaust hood, suitable for gas, electric and grease fires. Size and location of extinguishers shall be determined by the Contractor in accordance with NFPA 10 and shall be dependent on type of extinguishing agent selected. Fire protection system shall be installed in accordance with manufacturer's recommendations, NFPA 17A and applicable codes or standards. An installation certification form shall be submitted to the Contracting Officer, at the completion of the installation.

2.13 CONDENSATE HOODS

Design, fabrication, air flow rate and installation of hood and duct systems shall conform to ACGIH-01 and NFPA 96. Unless otherwise specified, ducts and hoods shall be secured to building so as to be level and free from vibrations under all conditions of operation. Supply and installation of exhaust fans for food service equipment and exhaust hoods shall be as specified in Section 15990 TESTING ADJUSTING AND BALANCING.

2.13.1 Condensate Exhaust Hood Connections Provisions

2.13.1.1 Exhaust Duct for Canopy or Noncanopy Condensate Hoods

Ducts shall be constructed of 1.3 mm (18 gauge) stainless steel. External seams shall be welded and liquid-tight. Duct size shall be based on a minimum air velocity of 4.06 m per second. Duct shall be continuously welded, liquid tight, to hood duct collar as required by NFPA 96.

2.13.1.2 Hood Support

Wall mounted or island type hoods shall be supported from the roof structure with stainless steel mounting brackets provided with the hoods. Hanger rods shall be 13 mm diameter stainless steel, threaded at the bottom and designed at the top to fit into inserts in building slats above or hanger attachments fastened to structural steel members. Hanger rods shall be spaced 1200 mm on center, maximum.

2.13.1.3 Hood Lights and Wiring

Recess mounted, vapor-proof fluorescent light fixtures shall be provided the full length of the hood as shown on the drawings. A full-length angle member shall be secured to the rear side of the stainless steel surface for total contact of the fixture flange. The light fixtures shall be prewired to junction box at a rear free corner.

2.13.1.4 Closure Panels

Vertical corner mullions shall be provided at removable closure panels, 50 mm by 50 mm, 1.6 mm (16 gauge) stainless steel, and shall be welded integrally to furring and head channel. Exhaust hood closure panels shall be 13 mm pan-formed 1.3 mm (18 gauge) stainless steel. The upper edge of

the panel shall be retained in a 25 mm by 50 mm continuous 1.6 mm (16 gauge) stainless steel head channel secured to the hood superstructure. The lower edge of the panels shall be mounted on perimeter furring cap, and shall be turned back 25 mm for "zee" clip retention.

2.13.2 Ducts at Dishwashing Machines

Ducts at dishwashing machines shall consist of two vertical ducts, one at each end of the dishwasher. Exposed, seamless, ducts shall be constructed of not less than 1.3 mm (18 gauge) stainless steel and shall be sized to accommodate the machine exhaust vent. The intake of each duct shall be at the top edge of the dishwasher and the ducts shall extend to 150 mm above the finished ceiling for final connection. The duct shall be trimmed at the ceiling with a 1.6 mm (16 gauge) stainless steel angle flange with all corners welded. The exhaust outlet shall be connected to the exhaust system.

2.13.3 Condensate Exhaust Hoods

Hoods, exposed ducts, and enclosures over dishwashing machines and the rinse compartment of pot washing sinks shall be constructed of 1.6 mm (16 gauge) stainless steel with all seams welded, ground, and polished.

2.13.3.1 Condensate Gutter

Hood shall be fabricated so as to form a condensate gutter 75 mm wide by 25 mm high at the perimeter and shall be provided with a condensate drain terminating at a floor sink location.

2.13.3.2 Duct Openings

Duct openings with collars shall be of quantity/size as indicated, with a stainless steel louvered grille at the openings. Penetrations of the dishwashing machine duct risers through the hood body shall be trimmed and sealed.

2.13.3.3 Ceiling Recessed Exhaust Hood at Dishwashing Machines

Hood over dishwashing machines shall be constructed of 1.6 mm (16 gauge) stainless steel with all seams welded, ground, and polished. Both long sides shall slope up to an 450 mm interior height from 150 mm above bottom edge. Body shall have a 50 mm wide perimeter flanged turned-up 19 mm at 90 degrees (increase to 250 mm width at supply air diffusers.) Duct openings with collars shall be of quantity/size as indicated, with a stainless steel louvered grille at the openings. Penetrations of the dishwashing machine duct risers through the hood body shall be trimmed and sealed.

2.14 PREFABRICATED WALK-IN REFRIGERATORS

Refrigerators shall be prefabricated, commercial, walk-in type intended for use in dining facilities. Units shall conform to UL 207, UL 471 and NSF Std 7 type and size as indicated, and the following:

2.14.1 General Requirements

2.14.1.1 Closure Panels

Closure panels and/or trim strips to the building walls and ceiling shall

be installed with concealed attachments. Closure/trim shall be of the same material as the wall panels unless otherwise noted.

2.14.1.2 I-Beam Supports

Wherever compartment dimension exceeds the clear-span ability of ceiling panels, I-beam supports shall be provided on the exterior of the ceiling or supported by spline-hangers. 13 mm diameter steel rods shall be installed through beam/hangers and secured to the structure above. Beams or posts within compartments will not be acceptable.

2.14.1.3 Identification Signs

Engraved phenolic plastic compartment identification signs 300 mm by 50 mm high in Contracting Officer's selection of color with 25 mm letters shall be mounted on door above view window.

2.14.1.4 Door

Door panel inner and outer skins shall be of 1 mm patterned aluminum. Doors shall be filled with insulation 100 mm thick, and one per unit. Safety hardware shall conform to NSF Std 2. Hardware shall be stainless steel.

2.14.1.5 Strip Curtains

Transparent, flexible, vinyl-reinforced strip curtains shall be provided which are able to be replaced individually and anchored at top. Strip shall be a minimum 800 mm in width and 2 mm thick.

2.14.1.6 Door Stops

Door stops shall be provided, where necessary, to prevent walk-in refrigerator doors from striking adjacent walls, plumbing fixtures or food service equipment when door is open.

2.14.1.7 Protective Bumpers

Bumpers shall be fabricated from either 1.5 mm thick galvanized steel or stainless steel channel or from solid rubber or rubber-like materials having a durometer A-hardness of 75 plus or minus 5.

2.14.1.8 Gasket

Gasket material shall be either natural or synthetic rubber. Where frames are used, the panels shall fit together with gaskets that are designed for 50 percent compression.

2.14.1.9 Alarm Systems

An alarm system shall be provided consisting of a thermostat, amber pilot and red lights, buzzer and a 12 volt stepdown transformer. The amber light shall indicate power is being supplied to the system. The thermostat shall sense a rise in temperature and activate the red light and buzzer. A shutoff switch shall be installed to silence the buzzer. A time delay shall be furnished to prevent activation of alarm during defrost cycle.

2.14.2 Floor

Floor shall be constructed as indicated in the drawings.

2.14.3 Refrigeration Systems

Refrigeration equipment for cold storage facilities shall be as specified under Section 15652 COLD STORAGE REFRIGERATION SYSTEM.

2.14.3.1 Unit Coolers

Unit coolers shall be of specified quantity and model numbers and shall be ceiling-hung by 13 mm outside diameter nylon bolts with stainless steel washers and nuts. Hanger bolts shall be inserted through plastic sleeve with the penetrations sealed airtight.

2.14.3.2 Drain Fittings

Unit cooler drain fittings shall be positioned as indicated on the drawings. Cast tee-fittings shall be installed on drain pan outlet with union and cleanout plug and shall have a 25 mm copper drainline extended through a wall panel to an air-gap fitting or floor drain.

a. Drainline shall be sloped 42 mm per m, trap at exterior of the assembly, and shall turn down into drain. Drainlines of adjacent compartments shall be manifolded wherever possible.

b. Plastic sleeve shall be installed through the compartment wall, and sealed around the drainline. A stainless steel escutcheon shall be installed with set screws at the exterior of the wall.

c. Electric drainline heater cable shall be provided with a minimum rating of 100 watt per lineal meter, 208 volts, single phase. The drainline shall be wrapped with a maximum 50 mm loop spacing and interwired to the unit cooler for continuous operation.

2.14.3.3 Electrical Conduit

EMT conduit with pull-wire and wide-sweep bends shall be installed for refrigerant piping to remote food service equipment refrigeration systems and shall be sealed at both ends with silicone foam.

2.14.3.4 System Start Up

Evacuation and charging after completion of pressure test shall be as specified under Section 15652 COLD STORAGE REFRIGERATION SYSTEM.

2.15 GAS-BURNING EQUIPMENT

2.15.1 General Description

Gas-burning equipment shall comply with the applicable requirements of AGAL, ANSI, and NFPA 54.

2.15.2 Restraining Device for Mobile Gas Equipment

A heavy duty steel cable, 75 mm by 150 mm shorter than the equipment connector shall be fastened to the equipment and the walls.

2.15.3 Flexible Hoses

Flexible hoses for gas shall be AGAL listed hose assemblies constructed with a corrugated corrosion-resistant steel inner jacket, stainless steel braided mesh exterior jacket, and shall have a sanitary outer coating. Quick disconnect hose assemblies shall be supplied with quick disconnect couplings, with gas couplings being AGAL design certified and conforming to ANSI Z21.69.

2.16 ELECTRICAL WORK

Electrical systems, components and accessories shall be certified to be in accordance with NFPA 70 and the following:

2.16.1 Installed Equipment Load

Should equipment differ from that specified, be approved for use and such equipment have different load requirements from that specified, the Contractor shall provide electrical service compatible with the installed equipment loads.

2.16.2 Electrical Fittings and Components

Food service equipment furnished under this section shall have loads, voltages, and phases compatible with building system, and shall conform to existing equipment requirements.

2.16.3 Cords and Caps

Food service equipment cord/caps shall be coordinated with related receptacles. All 120/208 volt "plug-in" equipment shall have Type SO or SJO cord and a plug with ground, fastened to frame/body of item. Mobile equipment shall have a strain-relief assembly at the cord connection of the appliance. Mobile electrical support equipment (heated cabinets, dish carts, etc.) and counter appliances mounted on mobile stands (mixers, food cutter, toaster, coffee makers, microwave ovens, etc.) shall have cord/cap assembly with cord-hanger strap secured to rear of equipment.

2.16.4 Switches and Controls

Each motor-driven appliance or electrically-heated unit shall be equipped with control switch or starter per Underwriters Laboratories, and shall have low-voltage and overload protection. Disposer controls recess-mounted in the wall shall have external fittings and accessories removed from enclosure and shall be furnished with a 1.6 mm (16 gauge) stainless steel perimeter angle flange with welded corners. Controls shall be installed at 1200 mm above finished floor to bottom of enclosure. Disposer controls recess-mounted in the counter-splash risers shall have external fittings and accessories removed from a NEMA Type 4 watertight enclosure and shall be furnished with a 1.6 mm (16 gauge) stainless steel perimeter angle flange with welded corners. Control shall be installed at 900 mm above finished floor to bottom of enclosure. The panel shall be provided with a 1200 mm long coil of waterproof electrical conduit from the bottom of the control panel. Remote manual starters, magnetic contactors, starters, and push-button stations shall have a NEMA Type 4 waterproof enclosure as defined by NEMA 250. A NEMA Type 1 enclosure shall be used only when installed in a closed base body, as defined by NEMA 250. Equipment or devices at 208/240 volts and 460/480 volts shall have integral, prewired step-down transformer to provide 120 volt control circuit.

2.16.5 Motors

Motors at 120 volts shall have manual tumbler type starter with thermal overload protection and interchangeable heating elements. Motors at 208/240 volts shall have magnetic starter with low-voltage protection and one interchangeable overload relay per phase.

2.16.6 Heating Elements

Electrically-heated equipment shall have thermostatic controls. Water heating equipment shall be equipped with a positive low-water shut-off.

2.16.7 Receptacles and Switches

Receptacles which are located in vertical panels of closed base bodies shall be installed in 300 mm by 215 mm by 75 mm deep recessed mounting panel sloped on a 60-degree angle and turned up to the top of the opening. Receptacles which are located in closed base fixtures shall be prewired to a junction box located within 150 mm from the bottom of the utility compartment. Receptacles which are installed in/on fabricated equipment shall be horizontally-mounted in a metal box with a stainless steel cover plate.

2.16.8 Light Fixtures

Light fixtures with lamps which are installed in/on fabricated or field-assembled equipment shall be prewired to a junction box for final connection (fixtures shall be continuous run when indicated). Fluorescent display light shall be installed the full-length of the display stand and serving shelf with stud bolts and shall be prewired through a support post to a recess-mounted switch. Heat lamps shall be installed to underside of serving shelf assemblies as specified. When multiple 600 mm heat lamps are specified, a maximum length heat lamps chassis shall be provided. Switches shall be installed remote from lamps. Cold storage light fixtures shall be electrically connected through the hub fitting located on the top of the fixture. All horizontal conduit shall be above the ceiling panels. Plastic sleeves shall be installed through ceiling panels for electrical conduit and the penetrations shall be sealed airtight at both sides of panel.

2.16.9 Final Electrical Connection Provisions

Final electrical connection points of equipment shall be tagged with item number, name of devices on the circuit, total electrical load, voltage, and phase. Fabricated equipment containing electrically-operated components or fittings, indicated on utility connections drawings to be direct-connected, shall have each component, fitting or group thereof prewired to a junction box for final connection. Refer to the drawings for circuit loading. Field-assembled equipment (example, prefabricated cold storage assemblies, conveyor systems, exhaust hoods) shall have electrical components completely interconnected by this section for final connection as indicated on utility connection drawing. The following groups of cold storage assembly electrical devices shall be prewired to a top-mounted junction box for final connection per compartment grouping, unless otherwise indicated.

a. Light fixtures, switches, and heated pressure-relief vent.

b. Door/jamb heater and temperature monitors/alarms.

c. Evaporator fans, defrost elements, freezer fan door switch, and drainline heaters.

2.16.10 Lamps

Food service equipment containing light fixtures shall have appliance type bulbs. Exposed fluorescent lamps above or within a food zone shall have plastic coated lamps or standard lamps, sleeved in plastic tube with end caps.

2.17 PLUMBING WORK

Plumbing final connection points of equipment shall be tagged, indicating item number, name of devices or components, and type of utility (water, gas, drain).

2.17.1 Plumbing Connection Provisions

Extensions of indirect waste fittings shall be provided to open-sight hub drain, floor sink or floor drains from food service equipment. Drains shall have diameter as required, or 25 mm minimum, stainless steel. All drain lines subject to condensation shall be insulated as specified in Section 15080 THERMAL INSULATION FOR MECHANICAL SYSTEMS. Fabricated equipment containing components, fitting and/or devices indicated on food service connections drawings to be connected to the building systems shall have each component, fitting, or group thereof prepiped to a utility compartment for final connection. Piping brackets and supports shall be provided beneath/within fabricated equipment. Field assembled equipment (for example, prefabricated walk-in refrigerator/freezers, conveyor systems, exhaust hoods, dishwashing machines, convection ovens) shall have plumbing components completely interconnected under this section for final connection as indicated on utility connection drawings. For piping material and installation, see Section 15400, PLUMBING GENERAL PURPOSE.

PART 3 EXECUTION

3.1 INSTALLATION

Equipment shall be installed at locations shown in accordance with NSF-02 and in accordance with the manufacturer's written instructions. The Contractor shall make provision for the plumbing, heating, and electrical connections and for equipment indicated as being furnished and installed by the Government.

3.1.1 Equipment Connections

Equipment connections shall be complete for all utilities. Unless otherwise specified, exposed piping shall be chromium-plated copper alloy.

3.1.2 Gas Equipment Installation

Installation of equipment shall conform to ANSI Z21.15 and NFPA 54.

3.2 TESTING

All equipment shall be inspected and tested under operating conditions after installation. If inspection or test shows defects, such defects shall be corrected, and inspection and test shall be repeated. Refrigerator tests shall include the following:

3.2.1 Performance Tests

A written test procedure shall be submitted for approval prior to performance of tests. The Contractor shall furnish all instruments, test equipment, and personnel required for the tests; Government will furnish the necessary water and electricity for the installed equipment. Evidence shall be submitted that the instruments have been properly calibrated by an independent laboratory at the Contractor's expense. Performance tests for refrigeration system shall be in accordance with Section 15652 COLD STORAGE REFRIGERATION SYSTEMS.

3.2.2 Operating Tests

An operating test shall be performed on all items after complete installation and adjustment. The item of test failure shall be corrected and the test shall be rerun.

3.2.3 Clean and Adjust

All debris resulting from this work, as the installation progresses, shall be cleaned up and removed from the jobsite. All food service equipment, prior to demonstration, shall be thoroughly cleaned and polished, both interior/exterior. Drawer slides and casters shall be lubricated and adjusted. All pressure regulating valves, timed-delay relays, thermostatic controls, temperature sensors, and exhaust hood grilles shall be adjusted, as required, for proper operation. All faucet aerators and line strainers shall be cleaned or replaced. Damage to painted finishes shall be touched up.

3.2.4 Equipment Start-Up/Demonstration

The Contractor shall obtain the services of the manufacturer's representative experienced in the installation, adjustment and operation of the equipment specified. The representative shall supervise the start-up, adjustment, and testing of the equipment, prior to the demonstration. Equipment shall be carefully tested, adjusted, and regulated in accordance with the manufacturer's instructions and shall be so certified in writing to the Contracting Officer. A thorough operational demonstration shall be provided of all equipment and instructions furnished for general and specific care and maintenance. Selected items of equipment and attendees shall be scheduled, with the Contracting Officer, at least 2 weeks in advance of demonstration periods.

3.3 KITCHEN EQUIPMENT SPECIFICATIONS

See attachment.

-- End of Section --

ITEM CODE		NAME	DESCRIPTION	MAKE	MODEL NUMBER
1	C	Scale, Counter Spring Dial	Spring dial scale with wheeled stand. Temperature compensated spring, rack and pinion weighing mechanism. Non-glare three plated lock steel face with large vertical numbers. Stainless steel platform cover meeting USDA standard. See Equipment Schedule for quantity and dimensions.	Hobart	HOB 15
2	C	Desk, Double Pedestal	Double-pedestal desk has three storage drawers in the left pedestal and a storage drawer and file drawer in the right pedestal. Nonconference-style desk does not have an overhang. See Equipment Schedule for quantity and dimensions.	GSA	7110-00-149-1626
3	C	Shelving, Modular System	Wire shelves shall be stainless steel construction. Posts are fitted with adjustable leveling bolts. Shelf system meets U.S. Government Specifications MIL-S-40144E. See Equipment Schedule for quantity and dimensions.	Metro; Metropolitan Wire Corporation	
4	C	Platform Truck	2000-pound capacity aluminum platform truck has two 8” swivel casters and two 8” rigid casters, removable 1” aluminum pipe handle, and one end rack. Diamond tread deck is fully wrapped around with a grey rubber bumper. See Equipment Schedule for quantity and dimensions.	Colson	10-6220
5	C	Shelving, Stationary	Aeroform shelf is press formed from a single sheet of 18 ga stainless steel. Each inside corner is fitted with an extruded aluminum bracket to accommodate an upright. The uprights are 1” O.D. stainless steel fitted with top caps and adjustable sanitary bullet foot. See Equipment Schedule for quantity and dimensions.	Servolift Eastern	80-A5
6	A	Freezer Condenser Unit	See Equipment Schedule for quantity, capacity and other requirements.		
7	A	Refrigerator Condenser Unit	See Equipment Schedule for quantity, capacity and other requirements.		
7a	A	Refrigerator Evaporator Unit	See Equipment Schedule for quantity, capacity and other requirements.		

Equipment Class: A = Contractor Furnished and Installed C = Government Furnished and Installed L = Other, Not In Contract

ITEM CODE		NAME	DESCRIPTION	MAKE	MODEL NUMBER
8	A	Doorway Closure	USDA vinyl strips to be 8 inches wide with a 2-inch nominal overlap, reinforced with nylon cord, and with an electronically heat sealed loop at the top to swing free on a round rod supported by end brackets attached to the inside face of the door frame. Vinyl material shall be 0.08 inches thick, approved for use in contact with exposed food in temperatures from -40 degrees to +150 degrees fahrenheit. Each strip shall be 8 inches wide with three embedded nylon reinforcing cords the full height spaced approximately 3 inches apart. See Equipment Schedule for quantity and dimensions of door opening.	Curtron Industries Inc.	M-200 Polar Strip Doors
9	A	Faucet Hose Station	See Mechanical Dwgs for fixture type.		
10a	A	Freezer	See Mechanical Dwgs for details.		
10b	A	Refrigerator- Dairy	See Mechanical Dwgs for details.		
10c	A	Refrigerator- Vegetable	See Mechanical Dwgs for details.		
10d	A	Freezer	See Mechanical Dwgs for details.		
10e	A	Refrigerator- Vegetable	See Mechanical Dwgs for details.		
11	A	Air Curtain	Air curtain shall be Underwriters Laboratories Listed and meet the requirements of the National Electric Code. Cabinet shall be a self contained one piece molded dark bronze high density polyethylene material. Adjustable inlet air louver assembly shall include a washable aluminum air filter. See Equipment Schedule for quantity and dimensions. See electrical for wiring and switch/control requirements.	Mars Air Doors	72CH (unheated)
11a	A	Air Curtain	Air curtain shall be Underwriters Laboratories Listed and meet the requirements of the National Electric Code. Cabinet shall be a self contained one piece molded dark bronze high density polyethylene material. Adjustable inlet air louver assembly shall include a washable aluminum air filter. See Equipment Schedule for quantity and dimensions. See electrical for wiring and switch/control requirements.	Mars Air Doors	72C (unheated)
11b	A	NOT USED			

Equipment Class: A = Contractor Furnished and Installed C = Government Furnished and Installed L = Other, Not In Contract

ITEM CODE		NAME	DESCRIPTION	MAKE	MODEL NUMBER
12	A	Floor Trough with Grate	Floor water receptacle unit is constructed of heavy duty, 14 gauge stainless steel, type 304, 18-8 all welded, ground and polished smooth. Receptacle is pitched toward waste for complete drainage. All troughs are fitted with special stainless steel waste cup with removable perforated stainless steel baskets. Unit is furnished with a type 304 stainless steel subway grate. Grating is constructed of 3/16" x 1" bars, set in a vertical position with open front and back for ease of draining. Two (2) ½" rods, set 3" in from each edge, are wedged through the bars full length. Three (3) ½" rods are used for grating over 15" wide. There is 13/16" clearance between bars so that wheels of mobile equipment will not become wedged. See Architectural drawings for locations and dimensions.	Food Service Corporation	
12a	C	Can Racks	The can storage rack is stationary, mounted on four adjustable flanged feet welded to the uprights. The top is .060" thick aluminum with all edges turned down 2". This unit is loaded from the rear and has a 210 #10 can capacity. See Equipment Schedule for quantity and dimensions.	Servolift Eastern	CSR-210
13	A	Cart	Model JB racks are: fabricated entirely of stainless steel; 1 ½ " square 16 gauge type 300 tubular frame; approved by the National Sanitation foundation and the U.S. Department of Agriculture. See Equipment Schedule for quantity and dimensions.	John Boos & Co.	Model JB
14	A	Sink, Vegetable Prep	Custom fabricated stainless steel stainless steel sink. See Equipment Schedule for quantity and dimensions.		
15	A	Waste Pulping Disposer	See Mechanical Dwgs for details.	Hobart	Model FD500
16	A	Refrigerator, Roll-Thru	Exterior cabinet including front, sides, doors, and louver rails shall be of heavy gauge stainless steel with #4 finish. Cabinet interior and a door liners shall be of stainless steel. Interior floors shall be of reinforced stainless steel. 38.8 cubic feet nominal capacity. See Equipment Schedule for quantity and dimensions.	Trausen Hobart	RR1-32 L P UT (roll-thru/self-contained) QESD1
17	C	Table	Stainless steel work tables shall have no drip countertop edge, square edge flush fit design, and built in drawer. Construction shall be: 14 gauge type 300 stainless steel top, 1 5/8" diameter tubular stainless steel legs with adjustable bullet feet, stainless steel gussets and 18 gauge type 430 stainless steel under shelf. See Equipment Schedule for quantity and dimensions.	TABCO (Tables Mfg. Inc.)	VSS-304

Equipment Class: A = Contractor Furnished and Installed C = Government Furnished and Installed L = Other, Not In Contract

ITEM CODE		NAME	DESCRIPTION	MAKE	MODEL NUMBER
18	C	Table, /Equipment Stand	Stainless steel work tables shall have no drip countertop edge, square edge flush fit design, and built-in drawer. Construction shall be: 14 gauge type 300 stainless steel top, 1 5/8" diameter tubular stainless steel legs with adjustable bullet feet, stainless steel gussets and 18 gauge type 430 stainless steel under shelf. See Equipment Schedule for quantity and dimensions.	TABCO (Tables Mfg. Inc.)	VSS-303
19	C	Table, /Equipment Stand, Mobile	Stainless steel work tables shall have no drip countertop edge, and square edge flush fit design. Construction shall be: 14 gauge type 300 stainless steel top, 1 5/8" diameter tubular stainless steel legs with adjustable bullet feet, stainless steel gussets and 18 gauge type 430 stainless steel undershelf.	TABCO (Tables Mfg. Inc.)	SAG-MT-302
20	A	Storage Shelving System	Top track high density storage system. See Equipment Schedule for quantity and dimensions.	InterMetro Industries Corporation	
21	A	Table with Sink	Stainless steel work tables shall have no drip countertop edge, square edge flush fit design, and built-in sink. Construction shall be: 14 gauge type 300 stainless steel top, 1 5/8" diameter tubular stainless steel legs with adjustable bullet feet, stainless steel gussets and 18 gauge type 430 stainless steel undershelf. See Equipment Schedule for quantity and dimensions.	TABCO (Tables Mfg. Inc.)	VSS-306 & TA-11D
22	C	Meat Slicing Machine	Two speed automatic slicing with ½ HP permanently lubricated ball bearing motor. The knife, knife cover, gauge plate, and carriage are stainless steel. The platter area is burnished aluminum. Slicer comes with a tubular chute and plunger for random slicing of fruits, vegetables and meats. See Equipment Schedule for quantity and dimensions.	Hobart	2712
23	A	Vegetable Peeling Machine	Peeler comes with 1 HP motor with a peeling capacity of 50-60 pounds in 1-3 minutes and peel trip unit. Stand is furnished with solenoid water control valve and air-gap type inlet. Peeler Unit: Cylindrical construction, heliarc-welded stainless steel with abrasive permanently bonded on interior surface of peeling hopper. Discharge chute is cast aluminum. Abrasive Disc: Lightweight fiberglass reinforced plastic disc. Peel Trap Unit: This unit consists of a base, strainer and legs. The strainer is made all of stainless steel. The bottom of drawer is removable for easy cleaning. See Equipment Schedule for quantity and dimensions.	Hobart	6460

Equipment Class: A = Contractor Furnished and Installed C = Government Furnished and Installed L = Other, Not In Contract

ITEM CODE		NAME	DESCRIPTION	MAKE	MODEL NUMBER
24	A	Waste Pulper with Through Connection	See Mechanical Dwgs for details.	Hobart	Model WR1000
25	C	Food Cutter	¾ HP cutter slices, dices, shreds and grates vegetable, fruits, cheeses, and bread crumbs. Cutter comes with storage rack for: Slicer discs (S2, S3, S5, S8, S11, S14, S5C, J2x2, J4x4 & J6x6), shredder discs (SH2, SH3, SH4 & SH7), and dicing grids (D8, D11, D14 & D22). See Equipment Schedule for quantity and dimensions.	Mannhart, Inc. Hobart	Model M3000 FP150
26	A	Rack, Utensil	Table mounted rack unit is all welded-stainless steel. Flat bar and tubular supports are stainless steel. Tubular supports extend through table top and are secured to the under shelf. See Equipment Schedule for quantity and dimensions.	Tabco	ST-48
27	A	Range, (4) Burner	Gas restaurant range with four 20,000 BTU/hour input per section open burners, with oven below to have automatic lighting with oven and pilot gas shut off in case of pilot outage. Oven to have 35,000 BTU/hour with one oven rack and two rack positions. Unit is provided with stainless steel door panel, sides and legs. See Equipment Schedule for quantity and dimensions.	Vulcan	Model 24L
28	A	Pan, Frying and Braising	Gas closed base tilting braising pan: 40 gallon capacity tilting braising pan, gas heated, closed base with electronic ignition and spray hose - hot and cold faucet mounted to base frame below pan at front. Pan body to be 14 gauge stainless steel, front hinged, cooking surface stainless steel bonded to ½" thick steel plate, interior coved bottom. See Equipment Schedule for quantity and dimensions.	Vulcan	Model G40C
29	A	Refrigerator, Rapid Thaw	Rapid thaw roll-in thawing cabinet: Stainless steel case front and doors. The 2-door unit has foamed-in-place polyurethane insulation throughout the cabinet and doors. The air circulating fans and plasticized, finned, forced convection coil are contained within a top mounted housing. All condensate water is removed by a vaporizer located in the top of the cabinet. See Equipment Schedule for quantity and dimensions (64.3 feet ^{3} interior capacity).	Victory Hobart	TRIS-2D-S7 TQES2
30	A	Floor Trough with Grate	Same as Item 12.		
31	A	Frozen Food Cabinet (pass-thru)	Two section 32" deep model with wide doors. Exterior cabinet including front, sides, doors and louver rails of heavy gauge stainless steel with #4 finish. Cabinet interior and door liners of stainless steel. 6" stainless steel legs are adjustable. Unit provided with a top mounted automatic non-electric condensate	Traulsen Hobart	Model RLT 2-32 W UT QSDF2

Equipment Class: A = Contractor Furnished and Installed C = Government Furnished and Installed L = Other, Not In Contract

ITEM CODE		NAME	DESCRIPTION	MAKE	MODEL NUMBER
			disposal system, and stainless steel shelving and tray slides. See Equipment Schedule for quantity and dimensions (54 cubic feet nominal interior capacity).		
32	A	Oven	Double deck gas convection oven: Stainless steel front, sides, top, rear enclosure panel and legs. Stainless steel doors with windows. Two 30,000 BTU/hr burners per section, 120,000 BTU/hr total input. Electronic spark igniters. 1/3 HP two speed oven blower motors. Solid state temperature controls. Extra oven racks. Stainless steel drip pans. Flexible gas hose with quick disconnect and restraining device. Down draft flue diverter for direct vent connection. See Equipment Schedule for quantity and dimensions	Vulcan-Hart	Model SG44D
32a	A	Oven/Steamer Combination	Combination-Oven/Steamer: Constructed entirely of stainless steel. Stainless steel door, right hand hinge, with tempered viewing windows. Four function selection switch. Solid state rotary dial thermostat. Fully insulated cooking chamber. Open vented system. Factory installed water pressure regulator, vented drain assembly, and hose and spray assembly. See Equipment Schedule for quantity and dimensions.	Blodgett	Model COS-20G
33	C	Opener, Can	Portable Electric Can Opener: Durable Lexan housing. Replaceable knife and gear. Spring-loaded mechanism. See Equipment Schedule for quantity and dimensions.	Edlund	Model No. 201
34	A	Mixing Machine 56.78 liters	60-Quart Mixer: Hand-operated bowl lift. Nickel-chromed finish. 2 HP fixed speed motor. Direct drive 4-speed transmission. Stainless steel two-piece bowl guard. Attachments and accessories: 9” vegetable slicer. Tray support. Beaters, whips, dough arm. Bowl splash cover. Bowl extension ring. Bowl truck. Colander. Bowl scraper.	Hobart	Model H-600-DT
35	C	Mixing Machine 18.93 liters	20-Quart Bench Type Mixer: ½ HP motor with grease packed ball bearing, ventilated, splash proof enclosure. Positive gear drive with 3 speed operation. Mixer comes with 20-quart stainless steel bowl, one flat “B” beater, one “D” wire loop whip, adjustable tray support, soup strainer/colander, and splash cover.	Hobart	Model A200DT
36	A	Kettle, 151.2 liters	Gas (input 105,000 BTU/hour) Tri-leg Stationary Fully Steam Jacketed 40 gallon capacity Kettle: 3” tapered plug type draw-off valve. 15 psi relief valve, vacuum relief valve, air relief valve, pilot outage automatic shut off, low-water cut off. Double faucet with swing spout and bracket mounted. Accessories: draw-off opening strainer, draw-off tube stainless steel, graduated measuring rod, kettle brushes, kettle paddles and whips.	Vulcan	Model GL40

Equipment Class: A = Contractor Furnished and Installed C = Government Furnished and Installed L = Other, Not In Contract

ITEM CODE		NAME	DESCRIPTION	MAKE	MODEL NUMBER
37	A	Counter, Stainless Steel	Stainless steel work tables shall have no drip countertop edge, square edge flush fit design, and built in drawer. Construction shall be: 14 gauge type 300 stainless steel top, 1 5/8" diameter tubular stainless steel legs with adjustable bullet feet, stainless steel gussets and 18 gauge type 430 stainless steel under shelf. See Equipment Schedule for quantity and dimensions.	TABCO (Tables Mfg. Inc.)	VSS-305
37a	A	Tray Slide	Custom fabricated stainless steel tray slide. See Equipment Schedule for quantity and dimensions.		
38	A	Kettle with Stand	Two 20-Quart Tilting Kettle Modules Self Generating Gas on 36" Base: Kettles to be mounted on cabinet base with stainless steel top, sides, and two hinged front doors with pull handle, 6" high stainless steel adjustable legs, and stainless steel flue back. To have elevated single swing faucet mounted on top of cabinet base. To be N.S.F. and American Gas Association (A.G.A.) design certified. See Equipment Schedule for quantity and dimensions.	Vulcan	2T2036G
38a		NOT USED			
39	A	Hood, Exhaust	See Mechanical drawings for location and dimensions.		
39a	A	Hood, Exhaust	See Mechanical drawings for location and dimensions.		
39b		NOT USED			
40	A	Floor Trough with Grate	Same as Item 12.		
41	A	Hood Washdown System	See Mechanical and Electrical drawings.		
42		Fry/Filter Station with Food Warmer & Lamp	Deep fryer consists of a fry pot with heat transfer tubes, having a splashdeck and splashback, installed in a cabinet. An automatic temperature control, melt cycle, dual timers, panel of 4 indicating lights, and safety shut off are arranged and designed for the proper frying of food in hot oil. The 20" TS has 4 burners with total input of 136,000 BTU/hour. Central filter is designed to utilize the natural sedimentation of the fryer. Safety switch shuts off fryer prior to filtration process. Prep area: recessed dump station over filter with stainless steel perforated screen comes with 2 LCF infrared heat lamps mounted over prep area.	Keating	Model 20TS GAS
43		NOT USED			

Equipment Class: A = Contractor Furnished and Installed C = Government Furnished and Installed L = Other, Not In Contract

ITEM CODE		NAME	DESCRIPTION	MAKE	MODEL NUMBER
44		NOT USED			
45	A	Water Meters	Automatic water meters: 100 lbs./minute capacity. See Equipment Schedule for quantity and dimensions.	Gemini Bakery Equipment Co.	Stoppil Model A
46	C	Table, Baker's	Stainless steel work tables shall have no drip countertop edge, square edge flush fit design, and 10-1/2" back splash. Construction shall be: 14 gauge type 300 stainless steel top, galvanized understructure; 1 5/8" diameter tubular 16 gauge stainless steel legs, stainless steel gussets and 1" adjustable metal bullet feet. See Equipment Schedule for quantity and dimensions.	TABCO (Tables Mfg. Inc.)	TVKS-245
47	A	Cooker, Steamer	Stainless steel pressureless steamer with twin atmospheric 45,000 BTU/hour firing rate gas steam generators. Two steamer cavities in cabinet base shall be all stainless steel construction. Steamer shall be design certified by the American Gas Association and be NSF listed. Pan capacity: six 12x20x1" pans; three 12x2x2 ½ " pans; two 12x20x4" pans. See Equipment Schedule for quantity and dimensions.	Groen	HY-6G
48	A	Hand Sink with Soap & Towel Dispenser	One piece deep drawn type 304 stainless steel sink bowl. Soap and towel dispenser (7PS-34). See Equipment Schedule for quantity. For sink specifications, see Section 15400, PLUMBING, GENERAL PURPOSE.		
49	C	Ingredient Bin, Mobile	150 pound capacity ingredient bin shall be constructed with heavy gauge stainless steel. Ingredient bin comes with removable left-to-right stainless steel partition (321-3442). See Equipment Schedule for quantity and dimensions.	Seco	Model 47-150
50	A	Pot Sanitizer	Fully-automatic electric pot, pan and utensil washing machine for front loading operation. Heavy gauge stainless steel construction: base, frame, tank, hood, spray arms, doors and standard enclosure panels. 28"x28"x28" wash chamber washes 25 racks per hour. Wash temperature: 150°F. Rinse temperature: 180°F. Unit comes with five each stainless steel 5"x28"x28" pan rack, utility rack, bake sheet rack and basket rack. See Equipment Schedule for quantity and dimensions.	Champion	Model PP-28
50a	A	Table, Drain Board	Custom fabricated stainless steel stainless steel drain board. See Equipment Schedule for quantity and dimensions.		
50b		NOT USED			

Equipment Class: A = Contractor Furnished and Installed C = Government Furnished and Installed L = Other, Not In Contract

ITEM CODE		NAME	DESCRIPTION	MAKE	MODEL NUMBER
51	A	Sink, Pot & Pan	Custom fabricated stainless steel stainless steel pot and pan sink. See Equipment Schedule for quantity and dimensions.		
51a	A	Heater, Booster	15KW booster is factory pre-plumbed and pre-wired with calibrated immersion thermostats and high temperature limit switch. All stainless steel body, base, and adjustable legs. Storage capacity is 16 gallons. Provides rinse water at 151 gallons per hour. See Equipment Schedule for quantity, dimensions, and notes.	Hatco	Model S-15
52	A	Spray, Pre-Rinse	Complete pre-rinse unit includes a mixing faucet for obtaining correct water temperature. Deck type faucet has under-sink spreader with built-in spring checks. Spring action gooseneck comes with built-in backflow preventer. Unit comes with add-on swinging nozzle faucet for dual purpose utility.	T&S Food Service Specialties	Model B-113
53		NOT USED			
54	A	Sink Heater, Booster	Sanitizing sink heater features dual reservoir system. One reservoir contains the heating element. The other reservoir traps and collects soil carried from other sink compartments. Unit shall be furnished complete with valves, temperature gauge and controls. Unit is all stainless steel body and base construction. Unit comes with a temperature monitor indicating when water reaches the sanitizing temperature. Unit is rated at 9KW. See Equipment Schedule for quantity, dimensions, and notes.	Hatco	Model 3CS-9
55	A	Hood, Exhaust	See Mechanical drawings for location and dimensions.		
56	C	Cart, Storage (pot & pan)	Storage Cart: Solid embossed stainless steel shelves. Polyurethane casters. Wheeled casters. See Equipment Schedule for quantity, dimensions, and notes.	Metro	PR48ES
56a	C	Rack, Storage for mixer accessories	Mobile mixer bowl and attachment cart. The removable overhead attachment rack is constructed of two stainless steel vertical tubular posts with top caps; three stainless steel cross members, welded to the vertical posts so as to form a rigid structure; seven 6” long stainless steel pegs welded to each of the two top cross members; and seven pegs welded to the bottom cross member. The assembly fits over the rear uprights. The unit is mounted on four 5” heavy duty, double ball bearing swivel casters with non-marking rubber tires. See Equipment Schedule for quantity, dimensions, and notes.	Servolift Eastern	Model 1005-A
57	A	Cashier Station and	Custom fabricated stainless steel cashier station and tray slide. See Equipment		

Equipment Class: A = Contractor Furnished and Installed C = Government Furnished and Installed L = Other, Not In Contract

ITEM CODE		NAME	DESCRIPTION	MAKE	MODEL NUMBER
		Tray Slide	Schedule for quantity, dimensions, and notes.		
57a	A	Cashier Counter	Custom fabricated stainless steel cashier counter. See Equipment Schedule for quantity, dimensions, and notes. **See Arch drawings for details**.		
58	A	Hot Food Bar (6 pans) with Guard	Solid oak cabinet with laminate panel insets, full undercounter storage with working doors on one side. Laminated countertop, concealed casters. Biztron tray slides, three per side. Oak and glass sneezeguard with fluorescent lighting. See Equipment Schedule for quantity, dimensions, and notes.	Yorkraft	6-Pan Spectrum Salad/Deli Station
59	A	Salad Bar Cold Pan (14) with Soup Station	14 Cold Pans and 1 Hot Pan (soup) Unit: Solid oak cabinet with laminate panel insets, full undercounter storage with working doors on one side. Laminated countertop, concealed casters. Biztron tray slides, three per side. Oak and glass sneezeguard with fluorescent lighting. See Equipment Schedule for quantity, dimensions, and notes.	Yorkraft	Spectrum Salad/Deli Station
60	C	Bread Dispenser	Tempered glass front stainless steel rear-load bread dispenser holds 3 Pulman loaves. See Equipment Schedule for quantity, dimensions, and notes.	Serv-a-Slice Industries	Model A-3
61	C	Butter Dispenser	All stainless steel dispenser with tempered glass front panel. Two stainless steel eutectic cooling units furnished. Five compartment unit holds 2.5 pounds of butter, 225 pats or 180 pats. See Equipment Schedule for quantity, dimensions, and notes.	Serv-a-Slice Industries	5-Compartment Model
62	C	Dispenser, Bread & Butter Plates	Unheated cabinet style mobile dish dispenser. The frame is constructed of all welded heavy gauge steel. The body sides are 20 ga. stainless steel and top is 18 ga. stainless steel. Unit is fitted with model AT adjustable drop-in dish dispensers, wrap-around, non-marking vinyl bumper, and 4" diameter heavy-duty double ball bearing swivel casters with non-marking rubber tires. Each tubular dispenser holds approximately 28-36 bowls or 50-72 plates (5 ¾" to 6 ½ " dish diameter) See Equipment Schedule for quantity, dimensions, and notes.	Servolift Eastern	Model 2AT3-ST
63	A	Salad/Deli Bar Corner Unit	Custom fabricated stainless steel salad/deli bar corner unit. See Equipment Schedule for quantity, dimensions, and notes.		
63a	A	Microwave Oven	1000 watt commercial microwave oven: 1.2 cubic foot stainless steel interior; 9 timer pads; electronic count-down display	Amana	Model RVS10A
64	A	Ice Cream Display	Cabinet to have tempered heat reflective glass lids with self-closing feature,	Master-Bilt	Model GT-50

Equipment Class: A = Contractor Furnished and Installed C = Government Furnished and Installed L = Other, Not In Contract

ITEM CODE		NAME	DESCRIPTION	MAKE	MODEL NUMBER
		Case	interior reflective stainless steel coil guard, protective front bumper guard, front air discharge compressor compartment, semi-hermetic compressor, automatic condensate evaporator, and have automatic defrost gravity evaporator coil. The temperature range will be 0° to -20°F. See Equipment Schedule for quantity, dimensions, and notes.		
64a		NOT USED			
65	A	Carving Station	Fully assembled and pre-wired carving cart includes heat lamp, gravy pan and perforated stainless carving plate with meat tongs. Each unit comes with 5" diameter swivel casters, two with brakes. See Equipment Schedule for quantity, dimensions, and notes.	Atlas Metal Industries, Inc.	Model CWGP-2
66	A	Hot Food Well (6 pans)	Six-pan Unit: The wells shall have an inner liner of 18 gauge stainless steel, type 304, grade 18-8. Wells shall be of one piece all welded construction. All corners shall be coved with a minimum of ¼" radius. Insulation shall be 1" minimum thick fiberglass. There shall be a minimum of 850 watts per pan opening. The top shall be of 18 gauge stainless steel die pressed with a raised bead edge around the entire perimeter. See Equipment Schedule for quantity, dimensions, and notes.	Atlas Metal Industries, Inc.	Model L-6-30P
66a	A	Shelf Protector (sneeze guard)	Protector Case with Glass Sneeze Guard & Fluorescent Light Fixtures. All stainless steel construction. Top of 16 gauge stainless steel, uprights of stainless steel square tubing. All welded construction, ground and polished. Glass angled for maximum visibility and sanitary protection	Atlas Metal Industries, Inc.	Model PRC-6
67	A	Counter, Hot/Grill	Custom fabricated stainless steel Hot/Grill counter. See Equipment Schedule for quantity, dimensions, and notes.		
67a		NOT USED			
68	C	Dispenser, Dinner Plates	Unheated cabinet style mobile dish dispenser. The frame is constructed of all welded heavy gauge steel. The body sides are 20 ga. stainless steel and top is 18 ga. stainless steel. Unit is fitted with model AT adjustable drop-in dish dispensers, wrap-around, non-marking vinyl bumper, and 4" diameter heavy-duty double ball bearing swivel casters with non-marking rubber tires. Each tubular dispenser holds approximately 28-36 bowls or 50-72 plates (8 ¼ " to 9 ¼ " diameter). See Equipment Schedule for quantity, dimensions, and notes.	Servolift Eastern	Model 2AT6-ST

Equipment Class: A = Contractor Furnished and Installed C = Government Furnished and Installed L = Other, Not In Contract

ITEM CODE		NAME	DESCRIPTION	MAKE	MODEL NUMBER
69	A	Griddle	Gas griddle consists of a griddle plate, having a drain trough and perimeter installed in a cabinet equipped with gas burners, and the griddle unit comes with a stainless steel stand (item no. 70). Griddle plate is 45”x24”x ¾ “. Gas burners are “H” shaped, atmospheric type with one burner for every 12” of linear plate surface. Each pilot is manually ignited with a piezo igniter. The griddle has a total input of 160,000 BTU’s. See Equipment Schedule for quantity, dimensions, and notes.	Keating	Model 48x30
70	A	Grill Stand	Factory fabricated stainless steel stand for Keating 48x30 gas griddle (item no. 69).	Keating	
70a	A	Splash Guard	Custom fabricated stainless steel splash guard. See Equipment Schedule for quantity, dimensions, and notes.		
71	A	Hood Exhaust	See Mechanical drawings for location and dimensions.		
72	A	Hood Washdown System	See Mechanical and Electrical drawings.		
73	A	Cabinet, Food Warming (pass-thru)	Two Section Pass-Thru Warmer: top mounted heating plenum ”plug” design with circulating fans for uniform temperature distribution; humidity relief vent; self-closing doors with lift-off hinges; exterior thermostat control with master on/off control switch; adjustable 6” stainless steel legs; heavy duty, epoxy-coated steel shelves; external digital thermometer; automatic interior lighting. Nominal Net capacity: 52 cubic feet. See Equipment Schedule for quantity, dimensions, and notes.	Continental Refrigerator Hobart	Model DL2WE-SS QSDH2
74	C	Cabinet, Pastry Storage	Enclosed aluminum compound guide cabinets to accommodate forty 18”x26” sheet pans. The cabinet is mounted on four 5” diameter, heavy duty, double ball bearing swivel casters with non-marking rubber tires (two casters are equipped with brakes).	Servolift Eastern	EC72-1826-40
75	A	Counter, Dessert/Condiments	Custom fabricated stainless steel stainless steel dessert/condiment counter. See Equipment Schedule for quantity, dimensions, and notes.		
76	A	Cold Food Frost Top	Frost plate unit is NSF listed. Top is constructed of 16 gauge stainless steel. The 1/3 HP compressor housing is fabricated from formed angles and bolted in a rigid form. See Equipment Schedule for quantity, dimensions, and notes.	Atlas Metal Industries	Model WF-5

Equipment Class: A = Contractor Furnished and Installed C = Government Furnished and Installed L = Other, Not In Contract

ITEM CODE		NAME	DESCRIPTION	MAKE	MODEL NUMBER
77	A	Breath Protector/Display Shelves	Double Deck display with Sneeze Guards: 1" stainless steel square tubing. Frame of all welded construction, ground and polished, top and intermediate shelving of ¼ " seamed glass, removable for cleaning. Sneeze guards of ¼ " glass, on adjustable brackets.	Atlas Metal Industries	Model DDC-5
77a	A	Tray Slide	Custom fabricated stainless steel tray slide. See Equipment Schedule for quantity and dimensions.		
78	A	Refrigerator, Roll-thru with Racks	Refrigeration: Air-cooled, hermetically sealed, capillary-type refrigeration system. Cabinet construction: The cabinet front and doors are constructed of heavy gauge polished stainless steel. Cabinet body and doors are insulated witn non-CFC foamed-in-place polyurethane foam. Cabinets are equipped with 6" adjustable stainless steel legs. Shelving:	Continental Refrigerator (Division of National Refrigeration & A/C Products Inc.)	
79	C	Toaster	Vertical conveyor bread or bun toaster with a toasting capacity of 16 bread slices per minute.	Hatco	TK-100
80	L	Dispenser, Soda	Leased unit comes ¼ " water line and ½ " drain from drain trough.		
81	C	Beverage Counter with Trough	Custom fabricated stainless beverage counter with trough. See Equipment Schedule for quantity and dimensions.		
81a	A	Tray Slide	Custom fabricated stainless steel tray slide. See Equipment Schedule for quantity and dimensions.		
82	L	Fruit Juice Dispenser	Leased unit.		
83	C	Sandwich Unit with Sneeze Guard	Sandwich/Salad Unit: Uses 134A refrigerant. Stainless steel telescoping rll-ack foam insulated cover. Extra wide 8-7/8" full length removable high-density polyethylene cutting board. All stainless steel front, top and sides. Adjustable vinyl-coated wire shelves. Aluminum finished back. 6" adjustable legs. Sneeze Guard: Clear plastic shield with two stainless steel supports. See Equipment Schedule for quantity and dimensions.	True Food Service Equipment, Inc.	Model TSSU-48-18M
84	A	Ice Maker, Dispenser	Countertop Ice Dispenser: 250 lb. ice storage capacity. Exterior cabinet to 20 gauge type 304 stainless steel. Dispenser to be UL and NSF listed.	SerVend International	Model M-250

Equipment Class: A = Contractor Furnished and Installed C = Government Furnished and Installed L = Other, Not In Contract

ITEM CODE		NAME	DESCRIPTION	MAKE	MODEL NUMBER
85	C	Dispenser, Juice	Visual Display Dispenser: Merchandise two different beverages at once. Constant recirculation of beverage keeps drinks chilled and fresh.	Jet Spray	Model JT20
86	A	Counter with Trough	Custom fabricated stainless steel counter with trough. See Equipment Schedule for quantity and dimensions.		
86a	A	Tray Slide	Custom fabricated stainless steel tray slide. See Equipment Schedule for quantity and dimensions.		
87	C	Dispenser, Milk	Refrigerated Milk Dispensers: Three-container storage capacity. Containers accommodates 3 or 5 gallon dispenser cans or 3, 5 or 6 gallon single-service bag and box containers. Temperature indicator in door. Refrigeration is a hermetically sealed copper tube cold wall evaporator system.	Silver King	Model SK-3
88	C	Dispenser, Cup & Glass	Mobile Cup or Glass Rack Dispenser: 20”x20” rack size. Removable stainless steel base panel and push handle. See Equipment Schedule for quantity and dimensions.	Servolift Eastern	Model 42
89	A	Cold Pan 2 Openings	Self-contained pre-charged and wired refrigeration unit designed to use the standard 12”x20” pan. Stainless steel, one piece 18 gauge surface and inner pan furnished with 20” removable divider bars. See Equipment Schedule for quantity and dimensions.	Atlas Metal Industries	Model WCM-2
89a	A	Shelf Protector with Light	Lighted Overshelf Single Service: All stainless steel construction, welded, ground and polished. Uprights constructed of ¾“ stainless steel square tubing. Sneeze guard furnished in ¼” clear plexiglass. Unit is equipped with two lines of fluorescent lights.	Atlas Metal Industries	Model OS-2
90	A	Counter, Stainless Steel	Custom fabricated stainless steel counter. See Equipment Schedule for quantity and dimensions.		
91	A	Floor Trough with Grate	Same as Item 12.		
92	A	Ice Making Machine	Ice Cubed Machine: Regular 30 ice cubes per pound. Air-cooled condenser unit. Ice production 1,025 pounds per 24 hours. Ice machine will include a self-cleaning feature consisting of one 10-minute clean cycle and 6 rinse cycles and a condenser air filter of aluminum mesh. See Equipment Schedule for quantity and dimensions.	Maniowoc	Model BR-1200A

Equipment Class: A = Contractor Furnished and Installed C = Government Furnished and Installed L = Other, Not In Contract

ITEM CODE		NAME	DESCRIPTION	MAKE	MODEL NUMBER
93		NOT USED			
94	A	Rack, Syrup Tank	Aluminum syrup tank racks: The uprights are extruded aluminum channels and the cross bracing are channels and angles fully welded to form a rigid structure. Between the uprights square aluminum tubing is welded horizontally on the rear and sides, to act as retainers for the metal syrup tanks. The uprights are fitted with adjustable bullet feet. Capacity: ten full syrup tanks and fifteen empty tanks. See Equipment Schedule for quantity and dimensions.	Servolift Eastern	Model STR2
95	A	Coffee Dispenser with Pre-Heater	Coffee dispenser with 10-gallon preheater (Vanguard model 6E730). Hot water available on demand. Two beverages, plus hot water available from dispenser. Machine is connected to cold water supply. See Equipment Schedule for quantity and dimensions.	Prestige	Model K-72
96		NOT USED			
97	A	Stand, Condiments	Custom fabricated stainless steel condiment stand. See Equipment Schedule for quantity and dimensions.		
97a	A	Tray Slide	Custom fabricated stainless steel tray slide. See Equipment Schedule for quantity and dimensions.		
98	A	Rack, Condiment Packs (9 bins)	Rack with 9 bins. See Equipment Schedule for quantity and dimensions.	Cambro	Model 9R9
99	L	Cappuccino Machine	Leased item.		
100	A	Tray Slide	Custom fabricated stainless steel tray slide. See Equipment Schedule for quantity and dimensions.		
101	A	Soft Serve Machine	Air-Cooled Soft Serve Machine: Hopper style freezer. 2 individual flavors or an equal combination of both for a twist effect. Design incorporates microprocessor based control system programmed to regulate all necessary modes of operation. Two 3.4 quart volume freezing cylinders. Two 20 quart capacity hoppers.	Taylor	Model 754/8754
102	A	Conveyor with Soiled Tray Table	Custom fabricated stainless steel conveyor with soiled tray table. See Equipment Schedule for quantity and dimensions.		
103	A	Dish Table, Soiled with	Custom fabricated stainless steel soiled dish table with trough. See Equipment		

Equipment Class: A = Contractor Furnished and Installed C = Government Furnished and Installed L = Other, Not In Contract

ITEM CODE		NAME	DESCRIPTION	MAKE	MODEL NUMBER
		Trough	Schedule for quantity and dimensions.		
104	A	Dishwashing Machine	Three-tank straight through operation. Each tank has a separate scrapper, wash and rinse tank with a final rinse. Each tank independently sprays 185-300 gallons per minute of concentrated recirculated water over the ware. Processes 247 to 38 racks per hour. High temperature final rinse distributes 3.76 to 4.53 gallons per minute of 180° F water over ware. See Equipment Schedule for quantity and dimensions. W/2 vent hood connections and single point, electrical connection for dishwasher only. Table limit switches.	The Stero Company Hobart	Model SCT-120S Model CPW 124A
104a	A	Booster Heater	45KW booster is factory pre-plumbed and pre-wired with calibrated immersion thermostats and high temperature limit switch. All stainless steel body, base, and adjustable legs. Storage capacity is 16 gallons. Provides rinse water at 452 gallons per hour. See Equipment Schedule for quantity, dimensions, and notes.	Hatco	Model S-45
105	A	Waste Pulping Extractor	See Mechanical Dwgs for details.	Hobart	Model W59
106	C	Dolly	Cup or Glass rack dolly for 20”x20” rack size. Unit with 14 gauge stainless steel platform and 16 gauge tubular handle. The units are mounted on four 4” diameter heavy-duty, double ball bearing swivel casters with non-marking rubber tires (2 casters with brakes). See Equipment Schedule for quantity, dimensions, and notes.	Servolift Eastern	Model 750-1
107	A	Duct Set	See Mechanical Dwgs for details.		
108	C	Sink, Silver Soak	Mobile undercounter soak sink. The heavy-duty undercounter soak sink is designed to fit under most counters that allows silverware or similar products to be placed into for soaking purposes. The heavy gauge one piece seamless die drawn sink is sloped toward the center and fitted with a lever handle drain. The sink bowl is mounted on four legs with non-marking rubber tires. See Equipment Schedule for quantity, dimensions, and notes.	Seco	Model 3474
		Not Used		.	
110	A	Dish Table, Clean	Custom fabricated stainless steel clean dish table. See Equipment Schedule for quantity and dimensions.		

Equipment Class: A = Contractor Furnished and Installed C = Government Furnished and Installed L = Other, Not In Contract

ITEM CODE		NAME	DESCRIPTION	MAKE	MODEL NUMBER
111	A	Conveyor with Soiled Tray Table	Custom fabricated stainless steel soiled dish table with conveyor. See Equipment Schedule for quantity and dimensions.		
112	A	Spray Assembly	Complete spray assembly unit includes a mixing faucet for obtaining correct water temperature. Deck type faucet has under-sink spreader with built-in spring checks. Spring action gooseneck comes with built-in backflow preventer. See Equipment Schedule for quantity and dimensions.	T&S Food Service Specialties	Model B-113
113	C	Clean/Sanitizing Machine	Portable high pressure cleaning system. Two 5 gallon heavy gauge polyethylene detergent tanks. Direct drive, positive displacement twin piston pump with factory grease packed crankcase for 180° F water temperatures. Pressures to 600 psi. Water pressure regulator assures precise detergent ratio and prevents excess pressure on pump inlet valves. All fittings in fluid system brass or stainless steel. See Equipment Schedule for quantity and dimensions.	Sage Systems, Inc.	Model 120
114	C	Dispenser, Bowl with Cover	One compartment dish cart with doors and cover. The frame is constructed of stainless steel tubing with integrally welded cross rails for rigidity. The cabinet is constructed of all-welded 18 gauge stainless steel, with all edges flanged for rigidity. The unit is mounted on four 4” diameter double bearing swivel casters. Approximate dish storage capacities: 10” diameter (288-324 plates); 7” diameter (576-648 plates); 5” diameter (1152-1296 plates). See Equipment Schedule for quantity and dimensions.	Servolift Eastern	Model D411
115	A	Wall Mounted Sorting Shelf	Dual purpose open tubular design, wall mounted open style rack shell with solid end brackets. TIG-welded construction with exposed areas blended to a #3 satin finish. 14 gauge type 300 series stainless steel brackets. 1-5/8 “ 18 gauge stainless steel tubing. Shelf sized for standard 20” rack. See Equipment Schedule for quantity and dimensions.	Advance food Service Equipment, Inc.	Model DT-6R-02
116	A	Wall Mounted Flat Shelf	Shelf provides a landing ledge for clean dishware. The dish rest is ideal for the accumulation and sorting of clean ware prior to being placed in their respective return carts. The shelf is fabricated from 12 gauge stainless steel . The total ledge protrusion is 11 ¾”. See Equipment Schedule for quantity and dimensions.		
117	C	Dispenser, Tray	Cantilever Style, Mobile Tray and Silverware Dispenser: The body and sides are 20 gauge stainless steel. The top is fitted with a stainless steel sloped overhead-type silverware dispenser, enclosed on all four sides, and provided with eight openings for insertion of stainless steel cylinders. The unit is mounted	Servolift Eastern	Model TCA-ST-OSW8

Equipment Class: A = Contractor Furnished and Installed C = Government Furnished and Installed L = Other, Not In Contract

ITEM CODE		NAME	DESCRIPTION	MAKE	MODEL NUMBER
			on four double ball bearing swivel casters (2 casters with brakes). The tray carrier is constructed of all-welded 16 gauge stainless steel and the tray size is 15 ¼" x 20 ½". See Equipment Schedule for quantity and dimensions.		
118	L	Bread Rack	Leased item.		
119	C	Proofing Cabinet	Non-insulated Proofing Cabinet: Formed and welded .100 aluminum top, .190 aluminum base. Extruded aluminum angles for (17) 18"x26" pans, riveted on 3" centers. Field reversible Lexan door. Removable 1000 watt, 120V power unit. Load capacity 200 lbs. Each. See Equipment Schedule for quantity and dimensions.	Cres Cor	Model 121-1816B
120	A	Refrigerator Display	Self-contained Glass Door Merchandiser: 1/3 HP compressor. 26 cubic feet capacity. Four wire shelves. Plug-in installation. 25 11/16" x 24" shelf size. See Equipment Schedule for quantity and dimensions.	True Food Service Equipment, Inc.	Model GDM-26
121	A	Electronic Menu Board	Custom fabricated menu board.		
122	A	Chute Hot Sandwich	Dual horizontal shelf sandwich display warmers are designed to hold hot wrapped sandwiches. The unit is made of extruded aluminum and sturdy stainless steel with tempered glass end panels. Incandescent lights illuminate the food holding area. See Equipment Schedule for quantity and dimensions.	Hatco	Model GRSDH-41D
123	C	Pizza Warmer	Food Holding and Display Cabinet: Tempered glass sides and incandescent lighting to enhance food appeal. Cabinet opening: 18 ¾" W x 22" H. See Equipment Schedule for quantity and dimensions.	Hatco	Model FST-1X
124	C	Cheese Warmer	3-1/2 quart warmer with pump maintains pre-warmed cheese at the proper serving temperature. See Equipment Schedule for quantity and dimensions.	Hubert	Stock No. 33287
125	A	Nachos Warmer	Holding and display cabinet is for warming and displaying nacho chips. Holds up to 40 lbs. Built of stainless steel and aluminum with tempered glass sides and doors. See Equipment Schedule for quantity and dimensions.	Hatco	Model FST-1-MN
126	C	Hot Dog Station with Warmer	Capacity: 130 dogs; 30-40 buns. See Equipment Schedule for quantity and dimensions.	Star Manufacturing International, Inc.	Model 35SS
127	C	Donut/Pastry Display	GFGI item.		

Equipment Class: A = Contractor Furnished and Installed C = Government Furnished and Installed L = Other, Not In Contract

ITEM CODE		NAME	DESCRIPTION	MAKE	MODEL NUMBER
128	A	Stand, Stainless Steel	Custom fabricated stainless steel stand. See Equipment Schedule for quantity and dimensions.		
129	A	Stand, Stainless Steel	Custom fabricated stainless steel stand. See Equipment Schedule for quantity and dimensions.		
129c	A	Tray Slide	Custom fabricated stainless steel tray slide. See Equipment Schedule for quantity and dimensions.		
130	A	Stand, Stainless Steel	Custom fabricated stainless steel stand. See Equipment Schedule for quantity and dimensions.		
131	A	Cold Food Table with Slide & Guard	Top: Top trim shall be heavy gauge 300 series stainless steel, flanged down into a stainless steel cold pan liner. Body: Unit shall have a fully enclosed body formed from heavy gauge cold-rolled paint grip steel. Unit shall be mounted on 5” diameter casters, two with brakes. Mechanical cold pan: To be heavy gauge stainless steel, coved corner construction. Unit shall be insulated on four sides with 2” styrene and on bottom with 1” urethane. Refrigeration: Equipped with refrigerant coil, condensing unit, controls and electric cord and plug. Compressor compartment has removable stainless steel louvered grill located at one end of salad bar. Canopy: A one-piece clear plexiglass canopy shall be mounted on brackets. Specially sized stainless steel and simulated marble adapter panels. Formica Brand laminate body finishes. 3 bar tray slide. Flourescent lights beneath canopy. See Equipment Schedule for quantity and dimensions.	Duke Manufacturing Co.	Model AHC-5M
132	A	Hood, Exhaust	See Mechanical drawings for location and dimensions.		
133	A	Hot Pan 3 Holes	Three-well hot food module. See Equipment Schedule for quantity and dimensions.	Galley	Model 9031
134	A	Cold Pan 3 Holes	Three-well cold food module, 5” deep refrigerated pan. See Equipment Schedule for quantity and dimensions.	Galley	Model 9230
135	A	Cold Pan 5Holes	Five-well cold food module, 5” deep refrigerated pan. See Equipment Schedule for quantity and dimensions.	Galley	Model 9250
136	A	Cook Hold	Electric Cooking and holding oven: Two separately controlled oven compartments enclosed in one exterior cabinet. Exterior of 22 gauge stainless	Halo Heat Systems by Alto-	Model 1000-TH-

Equipment Class: A = Contractor Furnished and Installed C = Government Furnished and Installed L = Other, Not In Contract

ITEM CODE		NAME	DESCRIPTION	MAKE	MODEL NUMBER
			steel. Two 18 gauge, non-magnetic stainless steel doors with magnetic door latch and viewing window. Four non-magnetic stainless steel side racks. Six non-magnetic stainless steel wire shelves. Two non-magnetic stainless steel drip pans. The unit is mounted on four 5” heavy duty casters; 2 with brakes. See Equipment Schedule for quantity and dimensions.	Shaam	I/HD/D
137		NOT USED			
138	A	Dock Leveler			

Equipment Class: A = Contractor Furnished and Installed C = Government Furnished and Installed L = Other, Not In Contract

ITEM CODE		NAME	DESCRIPTION	MAKE	MODEL NUMBER
C1	A	Hand Sink, Stainless Steel	One piece deep drawn type 304 stainless steel sink bowl (10”x14”x5”). Soap and towel dispenser (7PS-34). See Equipment Schedule for quantity and dimensions.	Advance Tabco	7-PS-50
C2	C	Dunnage Shelving, Mobile	Aeroform shelf is press formed from a single sheet of 18 ga stainless steel. Each inside corner is fitted with an extruded aluminum bracket to accommodate an upright. The uprights are 1” O.D. stainless steel fitted with top caps and adjustable sanitary bullet foot. See Equipment Schedule for quantity and dimensions.	Servolift Eastern	80-A5
C3		NOT USED			
C4	A	Warmer, Reach In	Double compartment holding cabinet with 18 gauge stainless steel exterior casing and two (2) 18 gauge stainless steel doors. Each compartment is separately controlled. The cabinet includes two ON/OFF adjustable thermostats, 60° to 200°F; two indicator lights; and two holding temperature gauges to monitor inside air temperature. Each compartment is equipped with one water reservoir pan with a perforated cover, and four sets of stainless steel universal angle pan supports. Pan supports in each compartment are adjustable in fourteen positions. Each cabinet includes one set of 5” heavy duty casters, two rigid and two swivel with brake. See Equipment Schedule for quantity and dimensions.	Halo Heat Systems by Alto-Shaam	Model 1000-UP/VSI/HD
C5	A	Overshelf	Wall-mounted Shelf: Manufactured of 18 gauge stainless steel, supported by 14 gauge stainless steel brackets. Maximum weight per shelf is 200 pounds. See Equipment Schedule for quantity and dimensions.	Duke	Model MSD-2424
C6	A	Conveyor Toaster	Same as Item No. 79.		
C7	A	Table/Equipment Stand	Custom fabricated stainless steel Table/Equipment stand. See Equipment Schedule for quantity and dimensions.		
C8	A	Equipment Stand	Custom fabricated stainless steel Table/Equipment stand. See Equipment Schedule for quantity and dimensions.		
C9	A	Food Warmer	Portable Food Warmer: Unit has thermo-controlled base that conducts heat from the bottom while an infrared element heats from above. A swing-away top provides fast and easy access to food pans. Clearance between heated base	Hatco	GR-FFB

Equipment Class: A = Contractor Furnished and Installed C = Government Furnished and Installed L = Other, Not In Contract

ITEM CODE		NAME	DESCRIPTION	MAKE	MODEL NUMBER
			and upper housing is 16”. Unit comes with food holding pans, wire trivet, and chrome pan rail.		
C10	A	Hood, Exhaust	See Mechanical Dwgs for details.		
C11	A	Hood Washdown System	See Mechanical Dwgs for details.		
C12	A	Deep Fat Fryer	Electric counter deep fat fryer. Fry pot: seamless drawn 18 gauge stainless steel with a cooking capacity of 22 pounds. Splashdeck made of 18 gauge stainless steel. Splashback is mad of 20 gauge stainless steel. Cabinet is made of 18 USS gauge mild steel with an enamel finish. Cabinet presents a stainless steel front with a full width 22 gauge stainless steel door directly under a control panel. The unit has three elements with a total input of 13.5 KW per hour rated at 240 volts. The unit sits on Item C14. See Equipment Schedule for quantity and dimensions.	Keating	Model 10x11 TS
C13	A	Top/Bottom Grill	Top-Side Cooker consists of cooking platen with an electrical control, electrical elements, NSF approved removable cooking sheet and a cool to the touch handle. The top side cooker is mounted on a Keating 48x30 gas griddle with griddle stand (Item C-14). Platen: 10-1/2” wide by 20” deep by 3/8” thick surface. Top-side cooker electrical specifications: 4KW AND 18 amps single phase at 220 VAC. Gas griddle consists of a griddle plate, having a drain trough and perimeter installed in a cabinet equipped with gas burners, and the griddle unit comes with a stainless steel stand (item no. 70). Griddle plate is 45”x24”x ¾ “. Gas burners are “H” shaped, atmospheric type with one burner for every 12” of linear plate surface. Each pilot is manually ignited with a piezo igniter. The griddle has a total input of 160,000 BTU’s. See Equipment Schedule for quantity, dimensions, and notes.	Keating	Top-side cooker & 48x30 gas griddle with stand
C14	A	Undercounter Refrigerator	Griddle Stand Refrigerator for Item C12 and C13. Features: stainless steel exterior and interior; plasticized fin evaporator coil; digital thermometer; anti-sweat drawer heaters; chrome-plated hardware; heavy gauge, reinforced stainless steel work top with drip-guard edge; stainless steel pans; self-closing drawers; adjustable stainless steel 6” legs. Refrigeration: 1/5 HP condensing unit; 1725 BTU/hour capacity. See Equipment Schedule for quantity, dimensions, and notes.	Continental Refrigerator	Model DL1G-SS
C15	A	Microwave Oven	1000 watt commercial microwave oven: 1.2 cubic foot stainless steel interior; 9	Amana	Model RVS10A

Equipment Class: A = Contractor Furnished and Installed C = Government Furnished and Installed L = Other, Not In Contract

ITEM CODE		NAME	DESCRIPTION	MAKE	MODEL NUMBER
			timer pads; electronic count-down display		
C16	A	Front Counter	Custom fabricated stainless steel front counter. See Equipment Schedule for quantity and dimensions.		
C17	A	Sandwich Refrigerator	Sandwich/Salad Unit: All stainless steel front, top and sides; 2 adjustable vinyl coated wire shelves; adjustable 6" legs; full length removable cutting board; 6.5 cubic feet capacity; 1/3 HP compressor. See Equipment Schedule for quantity and dimensions.	True Food Service Equipment, Inc.	Model TSSU-27-8
C17a	A	Serving Unit, Heated (2 wells)	Heated mobile modular serving unit for two well tray make-up system: Each well is thermostatically controlled and temperature adjustment knobs provide individual well temperatures between 80 and 200 degrees fahrenheit. Unit is mounted on heavy duty casters, two with brakes. See Equipment Schedule for quantity and dimensions.	Carter-Hoffman Corporation	Model CC-232
C18	A	Hot Dog/Pizza Counter	Custom fabricated stainless hot dog/pizza counter. See Equipment Schedule for quantity and dimensions.		
C19	A	Hot Dog Roller Grill	Roller grill (model 25) with sneeze guard (model 25SG) stacked on drawer type bun warmer (model SST-25): 27 hot dogs per load; 10 rollers; 2 motors. Bun warmer: stainless steel cabinet; thermostat control; stainless steel drawer slides; indicating light; stainless steel removable bun pan; 3-1/2 dozen bun capacity. See Equipment Schedule for quantity and dimensions.	Star Manufacturing Company	Models 25, 25SG & SST-25.
C20	A	Breath Protector (lighted)	Custom fabricated stainless breath protector counter. See Equipment Schedule for quantity and dimensions.		
C21	C	Tray Dispenser	Cantilever Style, Mobile Tray and Silverware Dispenser: The body and sides are 20 gauge stainless steel. The top is fitted with a stainless steel sloped overhead-type silverware dispenser, enclosed on all four sides, and provided with eight openings for insertion of stainless steel cylinders. The unit is mounted on four double ball bearing swivel casters (2 casters with brakes). The tray carrier is constructed of all-welded 16 gauge stainless steel and the tray size is 14" x 18". See Equipment Schedule for quantity and dimensions.	Servolift Eastern	Model TCA-ST-OSW8
C22	A	Display Refrigerator	Drop-in self contained refrigerated display case installed on custom fabricated beverage counter. Self-contained units require a cutout and drop-in space for the ½ HP compressor-condenser housing extension. Unit comes with self-	Delfield	Model 5248-S

Equipment Class: A = Contractor Furnished and Installed C = Government Furnished and Installed L = Other, Not In Contract

ITEM CODE		NAME	DESCRIPTION	MAKE	MODEL NUMBER
			closing sliding thermopane tempered glass doors. Exteriors are constructed of stainless steel. 18.0 cubic feet capacity & 20.8 square feet shelving space. See Equipment Schedule for quantity and dimensions.		
C23	A	Cup/Lid Dispenser	Four gravity fed cup storage tubes dispenser. Cup dispenser top with compartments for condiment storage as we as storage for lids, straws and napkins. Removable plastic top. See Equipment Schedule for quantity and dimensions.	SerVend	Model CD4A-T
C24	A	Ice Machine/Dispenser	Countertop Ice Dispenser: 150 lb. ice storage capacity. Exterior cabinet to 20 gauge type 304 stainless steel. Dispenser to be UL and NSF listed. Unit comes with water dispenser. See Equipment Schedule for quantity and dimensions.	SerVend International	Model M-150
C24a	L	Soda Dispenser	Leased Item		
C25	A	Coffee Urn (3 gallon)	Dual wall fiberglass insulated 3-gallon coffee urn: 375 five ounce cups per hour brewing rate. See Equipment Schedule for quantity and dimensions.	American Beverage Systems	Model 8113
C26	A	Rack, Condiment (9 bins)	Same as item 98.		
C27	A	Beverage Counter with Trough	Custom fabricated stainless beverage counter with trough See Equipment Schedule for quantity and dimensions.		
C28	A	Wrapping Station	Custom fabricated stainless wrapping staion. See Equipment Schedule for quantity and dimensions.		
C29	A	Overshelf	Same as item C5.		
C30	A	Reach-in Refrigerator	Self-contained Refrigerator: Exterior cabinet including front, sides, doors and louver, and rails of heavy gauge stainless steel with #4 finish. Cabinet interior and door liners of stainless steel. 6” stainless steel adjustable legs. Nominal 40.8 net cubic feet capacity. 1/3 HP compressor. 2540 BTU per hour. See Equipment Schedule for quantity and dimensions.	Traulsen Hobart	Model RHT 2-26 W UT Model SQS2
C31	A	Reach-in Frozen food Cabinet	Same as item 31.		

Equipment Class: A = Contractor Furnished and Installed C = Government Furnished and Installed L = Other, Not In Contract

ITEM CODE		NAME	DESCRIPTION	MAKE	MODEL NUMBER
C32	A	Tray Slide	Custom fabricated stainless steel tray slide. See Equipment Schedule for quantity and dimensions.		
C33	A	Refrigerator	Self-contained reach-in refrigerator: 19.1 net cubic capacity. ¼ HP compressor. 2030 BTU per hour. Three shelves: 14.6 square feet shelf area. See Equipment Schedule for quantity and dimensions.	Traulsen Hobart	Model RHT 1-26 W UT Model SQS1
C34	C	Point of Sale Station	Government Furnished/Government Installed Item		
C35		NOT USED			
C36	C	Pizza Warmer	Government Furnished/Government Installed Item		
C37	C	Pastry Display	Government Furnished/Government Installed Item		
C38	A	Tray Slide	Custom fabricated stainless steel tray slide. See Equipment Schedule for quantity and dimensions.		

Equipment Class: A = Contractor Furnished and Installed C = Government Furnished and Installed L = Other, Not In Contract

SECTION TABLE OF CONTENTS

DIVISION 15 - MECHANICAL

SECTION 15400

PLUMBING, GENERAL PURPOSE

PART 1 GENERAL

1.1 REFERENCES
1.2 STANDARD PRODUCTS
1.3 PERFORMANCE REQUIREMENTS
1.4 ELECTRICAL WORK
1.5 SUBMITTALS
1.6 REGULATORY REQUIREMENTS
1.7 PROJECT/SITE CONDITIONS

PART 2 PRODUCTS

2.1 MATERIALS
2.1.1 Pipe Joint Materials
2.1.2 Miscellaneous Materials
2.1.3 Pipe Insulation Material
2.2 PIPE HANGERS, INSERTS, AND SUPPORTS
2.3 VALVES
2.3.1 Hose Bibs
2.3.2 Lawn Faucets
2.3.3 Relief Valves
2.3.4 Thermostatic Mixing Valves
2.3.5 Pressure Reducing Valves
2.4 FIXTURES
2.4.1 Lavatories
2.4.2 Automatic Flushing System
2.5 BACKFLOW PREVENTERS
2.6 DRAINS
2.6.1 Floor and Shower Drains
2.6.1.1 Drains and Backwater Valves
2.6.2 Area Drains
2.6.3 Floor Sinks
2.7 TRAPS
2.8 GREASE INTERCEPTOR
2.9 WATER HEATERS
2.9.1 Automatic Storage Type
2.9.1.1 Gas-Fired Type
2.9.1.2 Electric Type
2.9.2 Electric Booster Heater
2.10 HOT-WATER STORAGE TANKS
2.11 EXPANSION TANKS
2.12 PUMPS
2.12.1 Sump Pumps
2.12.2 Circulating Pumps
2.12.3 Flexible Connectors
2.13 PLATE HEAT EXCHANGER
2.14 FOOD SERVICE EQUIPMENT

2.15 LEAK DETECTION SYSTEM FOR WATER
2.15.1 Operation
2.15.2 Installation

PART 3 EXECUTION

3.1 GENERAL INSTALLATION REQUIREMENTS
3.1.1 Water Pipe, Fittings, and Connections
3.1.1.1 Utilities
3.1.1.2 Cutting and Repairing
3.1.1.3 Protection of Fixtures, Materials, and Equipment
3.1.1.4 Mains, Branches, and Runouts
3.1.1.5 Pipe Drains
3.1.1.6 Expansion and Contraction of Piping
3.1.1.7 Commercial-Type Water Hammer Arresters
3.1.2 Joints
3.1.2.1 Threaded
3.1.2.2 Union and Flanged
3.1.2.3 Cast Iron Soil, Waste and Vent Pipe
3.1.2.4 Copper Tube and Pipe
3.1.3 Dissimilar Pipe Materials
3.1.4 Pipe Sleeves and Flashing
3.1.4.1 Sleeve Requirements
3.1.4.2 Flashing Requirements
3.1.4.3 Waterproofing
3.1.4.4 Optional Counterflashing
3.1.4.5 Pipe Penetrations of Slab on Grade Floors
3.1.5 Fire Seal
3.1.6 Supports
3.1.6.1 General
3.1.6.2 Pipe Supports and Structural Bracing, Seismic Requirements
3.1.6.3 Pipe Hangers, Inserts, and Supports
3.1.7 Pipe Cleanouts
3.2 WATER HEATERS AND HOT WATER STORAGE TANKS
3.2.1 Relief Valves
3.2.2 Installation of Gas- Fired Water Heater
3.2.3 Heat Traps
3.2.4 Connections to Water Heaters
3.3 FIXTURES AND FIXTURE TRIMMINGS
3.3.1 Fixture Connections
3.3.2 Flushometer Valves
3.3.3 Height of Fixture Rims Above Floor
3.3.4 Shower Bath Outfits
3.3.5 Fixture Supports
3.3.5.1 Support for Solid Masonry Construction
3.3.5.2 Support for Cellular-Masonry Wall Construction
3.3.5.3 Support for Steel Stud Frame Partitions
3.3.6 Backflow Prevention Devices
3.3.7 Access Panels
3.3.8 Sight Drains
3.3.9 Traps
3.4 VIBRATION-ABSORBING FEATURES
3.5 IDENTIFICATION SYSTEMS
3.5.1 Identification Tags
3.5.2 Color Coding
3.6 ESCUTCHEONS
3.7 PAINTING
3.8 TESTS, FLUSHING AND DISINFECTION
3.8.1 Plumbing System

3.8.1.1 Test of Backflow Prevention Assemblies
3.8.2 Defective Work
3.8.3 System Flushing
3.8.4 Operational Test
3.8.5 Disinfection
3.9 PLUMBING FIXTURE SCHEDULE
3.9.1 Company Operations Facilities (COF-2)
3.9.2 Company Operations Facilities (COF-3 to COF-7)
3.9.3 PLUMBING FIXTURE SCHEDULE FOR SOLDIER COMMUNITY BUILDING
3.9.4 PLUMBING FIXTURE SCHEDULE FOR REMOTE SWITCHING CENTER BUILDING
3.9.5 PLUMBING FIXTURE SCHEDULE FOR TRAINING FACILITY
3.9.6 PLUMBING FIXTURE SCHEDULE FOR BARRACKS BUILDING ("BK-1" and "BK-2")
3.9.7 PLUMBING FIXTURE SCHEDULE FOR BATTALION HEADQUARTERS BUILDING ("BN-1" and "BN-2")
3.9.8 Plumbing Fixture Schedule for Dining Facility (DN-1)
3.9.9 Plumbing Fixture Schedule For Central Plant Building
3.10 POSTED INSTRUCTIONS
3.11 PERFORMANCE OF WATER HEATING EQUIPMENT
3.11.1 Storage Water Heaters
3.11.1.1 Electric
3.11.1.2 Gas
3.11.2 Unfired Hot Water Storage
3.12 FOOD SERVICE EQUPMENT FOR DINING FACILITY DN-1
3.13 TABLES

-- End of Section Table of Contents --

SECTION 15400

PLUMBING, GENERAL PURPOSE

PART 1 GENERAL

1.1 REFERENCES

The publications listed below form a part of this specification to the extent referenced. The publications are referred to in the text by basic designation only.

AIR CONDITIONING AND REFRIGERATION INSTITUTE (ARI)

ARI 700	(1995) Specifications for Fluorocarbon and Other Refrigerants
ARI 1010	(1994) Self-Contained, Mechanically-Refrigerated Drinking-Water Coolers

AMERICAN NATIONAL STANDARDS INSTITUTE (ANSI)

ANSI Z21.10.1	(1993; Z21.10.1a; Z21.10.1b; Z21.10.1c) Gas Water Heaters Vol. I Storage Water Heaters with Input Ratings of 75,000 Btu Per Hour or Less
ANSI Z21.10.3	(1993; Z21.10.3a; Z21.10.3b) Gas Water Heaters Vol. III Storage, With Input Ratings Above 75,000 Btu Per Hour, Circulating and Instantaneous Water Heaters
ANSI Z21.22	(1986; Z21.22a) Relief Valves and Automatic Gas Shutoff Devices for Hot Water Supply Systems
ANSI Z21.56	(1994; Z21.56a) Gas-Fired Pool Heaters

AMERICAN SOCIETY FOR TESTING AND MATERIALS (ASTM)

ASTM A 53	(1997) Pipe, Steel, Black and Hot-Dipped, Zinc-Coated, Welded and Seamless
ASTM A 74	(1996) Cast Iron Soil Pipe and Fittings
ASTM A 105/A 105M	(1996) Carbon Steel Forgings for Piping Applications
ASTM A 193/A 193M	(1997a) Alloy-Steel and Stainless Steel Bolting Materials for High-Temperature Service
ASTM A 515/A 515M	(1992) Pressure Vessel Plates, Carbon

	Steel, for Intermediate- and Higher-Temperature Service
ASTM A 516/A 516M	(1990; R 1996) Pressure Vessel Plates, Carbon Steel, for Moderate- and Lower-Temperature Service
ASTM A 733	(1993) Welded and Seamless Carbon Steel and Austenitic Stainless Steel Pipe Nipples
ASTM A 888	(1996) Hubless Cast Iron Soil Pipe and Fittings for Sanitary and Storm Drain, Waste, and Vent Piping Applications
ASTM B 32	(1996) Solder Metal
ASTM B 88	(1996) Seamless Copper Water Tube
ASTM B 88M	(1996) Seamless Copper Water Tube (Metric)
ASTM B 370	(1992) Copper Sheet and Strip for Building Construction
ASTM B 641	(1993) Seamless and Welded Copper Distribution Tube (Type D)
ASTM B 813	(1993) Liquid and Paste Fluxes for Soldering Applications of Copper and Copper Alloy Tube
ASTM B 828	(1992) Making Capillary Joints by Soldering of Copper and Copper Alloy Tube and Fittings
ASTM C 564	(1995a) Rubber Gaskets for Cast Iron Soil Pipe and Fittings
ASTM C 920	(1995) Elastomeric Joint Sealants
ASTM D 2822	(1991; R 1997) Asphalt Roof Cement
ASTM D 3308	(1991a) PTFE Resin Skived Tape
ASTM D 3311	(1994) Drain, Waste, and Vent (DWV) Plastic Fittings Patterns
ASTM E 1	(1995) ASTM Thermometers
ASTM F 409	(1995) Thermoplastic Accessible and Replaceable Plastic Tube and Tubular Fittings

AMERICAN SOCIETY OF HEATING, REFRIGERATING AND AIR-CONDITIONING ENGINEERS (ASHRAE)

ASHRAE 34	(1992; Addenda a-j) Number Designation and Safety Classification of Refrigerants
ASHRAE 90.1	(1989; 90.1b; 90.1c; 90.1d; 90.1e; 90.1g;

	90.1i) Energy Efficient Design of New Buildings Except Low-Rise Residential Buildings

ASME INTERNATIONAL (ASME)

ASME A112.1.2	(1991) Air Gaps in Plumbing Systems
ASME A112.6.1M	(1997) Supports for Off-the-Floor Plumbing Fixtures for Public Use
ASME A112.18.1M	(1996) Plumbing Fixture Fittings
ASME A112.19.1M	(1994) Enameled Cast Iron Plumbing Fixtures
ASME A112.19.2M	(1995; Errata) Vitreous China Plumbing Fixtures
ASME A112.19.3M	(1987; R 1996) Stainless Steel Plumbing Fixtures (Designed for Residential Use)
ASME A112.19.4M	(1994; Errata Nov 1996) Porcelain Enameled Formed Steel Plumbing Fixtures
ASME A112.21.1M	(1991) Floor Drains
ASME A112.36.2M	(1991) Cleanouts
ASME B1.20.1	(1983; R 1992) Pipe Threads, General Purpose (Inch)
ASME B16.3	(1992) Malleable Iron Threaded Fittings
ASME B16.4	(1992) Gray Iron Threaded Fittings
ASME B16.5	(1996) Pipe Flanges and Flanged Fittings NPS 1/2 thru NPS 24
ASME B16.12	(1991) Cast Iron Threaded Drainage Fittings
ASME B16.15	(1985; R 1994) Cast Bronze Threaded Fittings Classes 125 and 250
ASME B16.18	(1984; R 1994) Cast Copper Alloy Solder Joint Pressure Fittings
ASME B16.21	(1992) Nonmetallic Flat Gaskets for Pipe Flanges
ASME B16.34	(1996) Valves - Flanged, Threaded, and Welding End
ASME B16.39	(1986; R 1994) Malleable Iron Threaded Pipe Unions Classes 150, 250, and 300
ASME B31.5	(1992; B31.5a) Refrigeration Piping
ASME B36.19M	(1985; R1994) Stainless Steel Pipe

ASME B40.1	(1991) Gauges - Pressure Indicating Dial Type - Elastic Element
ASME BPV VIII Div 1	(1998) Boiler and Pressure Vessel Code; Section VIII, Pressure Vessels Division 1 - Basic Coverage
ASME CSD-1	(1995; CSD-1a; CSD-1b) Controls and Safety Devices for Automatically Fired Boilers

AMERICAN SOCIETY OF SANITARY ENGINEERING (ASSE)

ASSE ANSI/ASSE 1001	(1990) Pipe Applied Atmospheric Type Vacuum Breakers
ASSE 1002	(1986) Water Closet Flush Tank Ball Cocks
ASSE ANSI/ASSE 1003	(1995) Water Pressure Reducing Valves for Domestic Water Supply Systems
ASSE 1005	(1986) Water Heater Drain Valves - 3/4-Inch Iron Pipe Size
ASSE ANSI/ASSE 1006	(1989) Residential Use (Household) Dishwashers
ASSE ANSI/ASSE 1011	(1995) Hose Connection Vacuum Breakers
ASSE ANSI/ASSE 1012	(1995) Backflow Preventers with Intermediate Atmospheric Vent
ASSE 1013	(1993) Reduced Pressure Principle Backflow Preventers
ASSE 1018	(1986) Trap Seal Primer Valves Water Supply Fed
ASSE ANSI/ASSE 1037	(1986; Rev thru Mar 1990) Pressurized Flushing Devices (Flushometers) for Plumbing Fixtures
ASSE 1037	(1990) Performance Requirement for Pressurized Flushing Devices (Flushometers) for Plumbing Fixtures

AMERICAN WATER WORKS ASSOCIATION (AWWA)

AWWA-01	(1995) Standard Methods for the Examination of Water and Wastewater
AWWA B300	(1992) Hypochlorites
AWWA B301	(1992) Liquid Chlorine
AWWA C203	(1991) Coal-Tar Protective Coatings and Linings for Steel Water Pipelines - Enamel and Tape - Hot-Applied
AWWA C606	(1987) Grooved and Shouldered Joints

AWWA D100	(1996) Welded Steel Tanks for Water Storage
AWWA M20	(1973) Manual: Water Chlorination Principles and Practices

AMERICAN WELDING SOCIETY (AWS)

AWS A5.8	(1992) Filler Metals for Brazing and Braze Welding
AWS B2.2	(1991) Brazing Procedure and Performance Qualification

CAST IRON SOIL PIPE INSTITUTE (CISPI)

CISPI 301	(1995) Hubless Cast Iron Soil Pipe and Fittings for Sanitary and Storm Drain, Waste, and Vent Piping Applications
CISPI 310	(1995) Coupling for Use in Connection with Hubless Cast Iron Soil Pipe and Fittings for Sanitary and Storm Drain, Waste, and Vent Piping Applications
CISPI HSN-85	(1985) Neoprene Rubber Gaskets for Hub and Spigot Cast Iron Soil Pipe and Fittings

CODE OF FEDERAL REGULATIONS (CFR)

10 CFR 430	Energy Conservation Program for Consumer Products

COMMERCIAL ITEM DESCRIPTIONS (CID)

CID A-A-238	(Rev B) Seat, Water Closet
CID A-A-240	(Rev A) Shower Head, Ball Joint

COPPER DEVELOPMENT ASSOCIATION (CDA)

CDA-02	(1995) Copper Tube Handbook

COUNCIL OF AMERICAN BUILDING OFFICIALS (CABO)

CABO A117.1	(1992; Errata Jun 1993) Accessible and Usable Buildings and Facilities

FOUNDATION FOR CROSS-CONNECTION CONTROL AND HYDRAULIC RESEARCH (FCCHR)

FCCCHR-01	(1993) Manual of Cross-Connection Control

HYDRAULIC INSTITUTE (HI)

HI ANSI/HI 1.1-1.5	(1994) Centrifugal Pumps

INTERNATIONAL ASSOCIATION OF PLUMBING AND MECHANCIAL OFFICIALS

IAPMO ANSI/IAPMO Z124.1	(1995) Plastic Bathtub Units
IAPMO ANSI/IAPMO Z124.5	(1997) Plastic Toilet (Water Closets) Seats
IAPMO ANSI/IAPMO Z124.9	(1993) Plastic Urinal Fixtures

MANUFACTURERS STANDARDIZATION SOCIETY OF THE VALVE AND FITTINGS INDUSTRY (MSS)

MSS SP-25	(1998) Standard Marking System for Valves, Fittings, Flanges and Unions
MSS SP-58	(1993) Pipe Hangers and Supports - Materials, Design and Manufacture
MSS SP-69	(1996) Pipe Hangers and Supports - Selection and Application
MSS SP-70	(1990) Cast Iron Gate Valves, Flanged and Threaded Ends
MSS SP-71	(1997) Cast Iron Swing Check Valves, Flanges and Threaded Ends
MSS SP-72	(1992) Ball Valves with Flanged or Butt-Welding Ends for General Service
MSS SP-73	(1991; R 1996) Brazing Joints for Copper and Copper Alloy Pressure Fittings
MSS SP-78	(1987; R 1992) Cast Iron Plug Valves, Flanged and Threaded Ends
MSS SP-80	(1997) Bronze Gate, Globe, Angle and Check Valves
MSS SP-83	(1995) Class 3000 Steel Pipe Unions Socket-Welding and Threaded
MSS SP-85	(1994) Cast Iron Globe & Angle Valves, Flanged and Threaded Ends
MSS SP-110	(1996) Ball Valves Threaded, Socket-Welding, Solder Joint, Grooved and Flared Ends

NATIONAL ASSOCIATION OF PLUMBING-HEATING-COOLING CONTRACTORS (NAPHCC)

NAPHCC-01	(1996) National Standard Plumbing Code

NATIONAL ELECTRICAL MANUFACTURERS ASSOCIATION (NEMA)

NEMA 250	(1991) Enclosures for Electrical Equipment (1000 Volts Maximum)

NATIONAL FIRE PROTECTION ASSOCIATION (NFPA)

NFPA NFPA 54/ANSI Z223.1	(1996; Errata) National Fuel Gas Code

NFPA 90A	(1996) Installation of Air Conditioning and Ventilating Systems

PLUMBING AND DRAINAGE INSTITUTE (PDI)

PDI G-101	(1996) Testing and Rating Procedure for Grease Interceptors with Appendix of Sizing and Installation Data
PDI WH 201	(1992) Water Hammer Arresters

SOCIETY OF AUTOMOTIVE ENGINEERS (SAE)

SAE J 1508	(1996) Hose Clamps

UNDERWRITERS LABORATORIES (UL)

UL 174	(1996; Rev thru Nov 1997) Household Electric Storage Tank Water Heaters
UL 430	(1994; Rev thru Oct 1996) Waste Disposers
UL 749	(1997) Household Dishwashers

1.2 STANDARD PRODUCTS

Specified materials and equipment shall be standard products of a manufacturer regularly engaged in the manufacture of such products. Specified equipment shall essentially duplicate equipment that has performed satisfactorily at least two years prior to bid opening.

1.3 PERFORMANCE REQUIREMENTS

1.4 ELECTRICAL WORK

Motors, motor controllers and motor efficiencies shall conform to the requirements of Section 16415 ELECTRICAL WORK, INTERIOR. Electrical motor-driven equipment specified herein shall be provided complete with motors. Equipment shall be rated at 60 Hz, single phase, ac unless otherwise indicated. Where a motor controller is not provided in a motor-control center on the electrical drawings, a motor controller shall be as indicated. Motor controllers shall be provided complete with properly sized thermal-overload protection in each ungrounded conductor, auxiliary contact, and other equipment, at the specified capacity, and including an allowable service factor.

1.5 SUBMITTALS

Government approval is required for submittals with a "GA" designation; submittals having an "FIO" designation are for information only. The following shall be submitted in accordance with Section 01330 SUBMITTAL PROCEDURES:

SD-01 Data

Vibration-Absorbing Features; FIO.

Details of vibration-absorbing features, including arrangement, foundation

plan, dimensions and specifications.

SD-04 Drawings

Plumbing System; FIO.

Detail drawings consisting of illustrations, schedules, performance charts, instructions, brochures, diagrams, and other information to illustrate the requirements and operations of each system. Detail drawings for the complete plumbing system including piping layouts and locations of connections; dimensions for roughing-in, foundation, and support points; schematic diagrams and wiring diagrams or connection and interconnection diagrams. Detail drawings shall indicate clearances required for maintenance and operation. Where piping and equipment are to be supported other than as indicated, details shall include loadings and proposed support methods. Mechanical drawing plans, elevations, views, and details, shall be drawn to scale.

Electrical Schematics; FIO.

Complete electrical schematic lineless or full line interconnection and connection diagram for each piece of mechanical equipment having more than one automatic or manual electrical control device.

SD-06 Instructions

Plumbing System; FIO.

Diagrams, instructions, and other sheets proposed for posting. Manufacturer's recommendations for the installation of bell and spigot and hubless joints for cast iron soil pipe.

SD-09 Reports

Tests, Flushing and Disinfection; FIO.

Test reports in booklet form showing all field tests performed to adjust each component and all field tests performed to prove compliance with the specified performance criteria, completion and testing of the installed system. Each test report shall indicate the final position of controls.

Backflow Prevention Assembly Tests; FIO.

Certification of proper operation shall be as accomplished in accordance with state regulations by an individual certified by the state to perform such tests. If no state requirement exists, the Contractor shall have the manufacturer's representative test the device, to ensure the unit is properly installed and performing as intended. The Contractor shall provide written documentation of the tests performed and signed by the individual performing the tests.

SD-13 Certificates

Materials and Equipment; FIO.

Where materials or equipment are specified to comply with requirements of AGA, or ASME, proof of such compliance. The label or listing of the specified agency will be acceptable evidence. In lieu of the label or listing, a written certificate may be submitted from an approved,

nationally recognized testing organization equipped to perform such services, stating that the items have been tested and conform to the requirements and testing methods of the specified agency. Where equipment is specified to conform to requirements of the ASME Boiler and Pressure Vessel Code, the design, fabrication, and installation shall conform to the code.

Bolts; FIO.

Written certification by the bolt manufacturer that the bolts furnished comply with the specified requirements. The certification shall include illustrations of product-required markings, the date of manufacture, and the number of each type of bolt to be furnished based on this certification.

SD-19 Operation and Maintenance Manuals

Plumbing System; FIO.

Six copies of the operation manual outlining the step-by-step procedures required for system startup, operation and shutdown. The manual shall include the manufacturer's name, model number, service manual, parts list, and brief description of all equipment and their basic operating features. Six copies of the maintenance manual listing routine maintenance procedures, possible breakdowns and repairs. The manual shall include piping and equipment layout and simplified wiring and control diagrams of the system as installed. Instructions and maintenance manuals shall be submitted for approval 30 days following CQC approval of equipment/materials.

1.6 REGULATORY REQUIREMENTS

Plumbing work shall be in accordance with NAPHCC-01.

1.7 PROJECT/SITE CONDITIONS

The Contractor shall become familiar with details of the work, verify dimensions in the field, and advise the Contracting Officer of any discrepancy before performing any work.

PART 2 PRODUCTS

2.1 MATERIALS

Materials for various services shall be in accordance with TABLES I and II. Pipe schedules shall be selected based on service requirements. Pipe fittings shall be compatible with the applicable pipe materials. Pipe threads (except dry seal) shall conform to ASME B1.20.1. Material or equipment containing lead shall not be used in any potable water system. Hubless cast-iron soil pipe shall not be installed underground, under concrete floor slabs, or in crawl spaces below kitchen floors.

2.1.1 Pipe Joint Materials

Hubless cast-iron soil pipe shall not be used under ground. Joints and gasket materials shall conform to the following:

a. Coupling for Cast-Iron Pipe: for hub and spigot type ASTM A 74, AWWA C606. For hubless type: CISPI 310

b. Coupling for Steel Pipe: AWWA C606.

c. Flange Gaskets: Gaskets shall be made of non-asbestos material in accordance with ASME B16.21. Gaskets shall be flat, 1.6 mm (1/16 inch) thick, and contain Aramid fibers bonded with Styrene Butadiene Rubber (SBR) or Nitro Butadiene Rubber (NBR). Gaskets shall be the full face or self centering flat ring type. Gaskets used for hydrocarbon service shall be bonded with NBR.

d. Neoprene Gaskets for Hub and Cast-Iron Pipe and Fittings: CISPI HSN-85.

e. Brazing Material: Brazing material shall conform to AWS A5.8, BCuP-5.

f. Brazing Flux: Flux shall be in paste or liquid form appropriate for use with brazing material. Flux shall be as follows: lead-free; have a 100 percent flushable residue; contain slightly acidic reagents; contain potassium borides; and contain fluorides. Silver brazing materials shall be in accordance with AWS A5.8.

g. Solder Material: Solder metal shall conform to ASTM B 32 95-5 tin-antimony.

h. Solder Flux: Flux shall be liquid form, non-corrosive, and conform to ASTM B 813, Standard Test 1.

i. PTFE Tape: PTFE Tape, for use with Threaded Metal or Plastic Pipe, ASTM D 3308.

j. Rubber Gaskets for Cast-Iron Soil-Pipe and Fittings (hub and spigot type and hubless type): ASTM C 564.

k. Flanged fittings including flanges, bolts, nuts, bolt patterns, etc., shall be in accordance with ASME B16.5 class 150 and shall have the manufacturer's trademark affixed in accordance with MSS SP-25. Flange material shall conform to ASTM A 105/A 105M. Blind flange material shall conform to ASTM A 516/A 516M cold service and ASTM A 515/A 515M for hot service. Bolts shall be high strength or intermediate strength with material conforming to ASTM A 193/A 193M.

2.1.2 Miscellaneous Materials

Miscellaneous materials shall conform to the following:

a. Water Hammer Arrester: PDI WH 201.

b. Copper, Sheet and Strip for Building Construction: ASTM B 370.

c. Asphalt Roof Cement: ASTM D 2822.

d. Hose Clamps: SAE J 1508.

e. Supports for Off-The-Floor Plumbing Fixtures: ASME A112.6.1M.

f. Metallic Cleanouts: ASME A112.36.2M.

g. Plumbing Fixture Setting Compound: A preformed flexible ring seal

molded from hydrocarbon wax material. The seal material shall be nonvolatile nonasphaltic and contain germicide and provide watertight, gastight, odorproof and verminproof properties.

h. Coal-Tar Protective Coatings and Linings for Steel Water Pipelines:

AWWA C203.

i. Hypochlorites: AWWA B300.

j. Liquid Chlorine: AWWA B301.

k. Gauges - Pressure and Vacuum Indicating Dial Type - Elastic Element: ASME B40.1.

l. Thermometers: ASTM E 1.

2.1.3 Pipe Insulation Material

Insulation shall be as specified in Section 15080 THERMAL INSULATION FOR MECHANICAL SYSTEMS.

2.2 PIPE HANGERS, INSERTS, AND SUPPORTS

Pipe hangers, inserts, and supports shall conform to MSS SP-58 and MSS SP-69.

2.3 VALVES

Valves shall be provided on supplies to equipment and fixtures. Valves 65 mm (2-1/2 inches) and smaller shall be bronze with threaded bodies for pipe and solder-type connections for tubing. Valves 80 mm (3 inches) and larger shall have flanged iron bodies and bronze trim. Pressure ratings shall be based upon the application. Valves shall conform to the following standards:

Description	Standard
Cast-Iron Gate Valves, Flanged and Threaded Ends	MSS SP-70
Cast-Iron Swing Check Valves, Flanged and Threaded Ends	MSS SP-71
Ball Valves with Flanged Butt-Welding Ends for General Service	MSS SP-72
Ball Valves Threaded, Socket-Welding, Solder Jointand Flared Ends	MSS SP-110
Cast-Iron Plug Valves, Flanged and Threaded Ends	MSS SP-78
Bronze Gate, Globe, Angle, and Check Valves	MSS SP-80
Steel Valves, Socket Welding and Threaded Ends	ASME B16.34
Cast-Iron Globe and Angle Valves, Flanged and Threaded Ends	MSS SP-85

Description	Standard
Vacuum Relief Valves	ASSE ANSI/ASSE 1001
Water Pressure Reducing Valves	ASSE ANSI/ASSE 1003
Water Heater Drain Valves	ASSE 1005
Trap Seal Primer Valves	ASSE 1018
Temperature and Pressure Relief Valves for Hot Water Supply Systems	ANSI Z21.22
Temperature and Pressure Relief Valves for Automatically Fired Hot Water Boilers	ASME CSD-1 Safety Code No., Part CW, Article 5

2.3.1 Hose Bibs

Hose Bibs with vacuum-breaker backflow preventer shall be brass with 20 mm (3/4 inch) male inlet threads, hexagon shoulder, and 20 mm (3/4 inch) hose connection. Hose Bib handle shall be securely attached to stem. Where indicated on drawings, provide hose bibbs integral with recessed wall hydrant boxes with bronze box construction, chrome plated finish, integral vacuum beaker, hinged locking cover and tee handle key.

2.3.2 Lawn Faucets

Lawn faucets shall be brass, with either straight or angle bodies, and shall be of the compression type. Body flange shall be provided with internal pipe thread to suit 20 mm (3/4 inch) pipe. Body shall be suitable for wrench grip. Faucet spout shall have 20 mm (3/4 inch) exposed hose threads. Faucet handle shall be securely attached to stem.

2.3.3 Relief Valves

Water heaters and hot water storage tanks shall have a combination pressure and temperature (P&T) relief valve. The pressure relief element of a P&T relief valve shall have adequate capacity to prevent excessive pressure buildup in the system when the system is operating at the maximum rate of heat input. The temperature element of a P&T relief valve shall have a relieving capacity which is at least equal to the total input of the heaters when operating at their maximum capacity. Relief valves shall be rated according to ANSI Z21.22. Relief valves for systems where the maximum rate of heat input is less than 59 kW (200,000 Btuh) shall have 20 mm (3/4 inch) minimum inlets, and 20 mm (3/4 inch) outlets. Relief valves for systems where the maximum rate of heat input is greater than 59 kW (200,000 Btuh) shall have 25 mm (1 inch) minimum inlets, and 25 mm (1 inch) outlets. The discharge pipe from the relief valve shall be the size of the valve outlet.

2.3.4 Thermostatic Mixing Valves

Mixing valves, thermostatic type, shall be line size and shall be constructed with rough or finish bodies either with or without plating. Each valve shall be constructed to control the mixing of hot and cold water and to deliver water at a desired temperature regardless of pressure or input temperature changes. The control element shall be of an approved

type. The body shall be of heavy cast bronze, and interior parts shall be brass, bronze, or copper. The valve shall be equipped with necessary stops, check valves, unions, and sediment strainers on the inlets. Mixing valves shall maintain water temperature within 2 degrees C of any setting. The mixing valve shall be suitable for use with hot water return systems. Factory assembled high-low manifold mixing systems shall be provided as indicated on the contract drawings. Pressured drop thru mixing valves and manifolded mixing systems shall be limited to 34.5 Kpa (5 psig). **Thermostatic mixing valve assembly flow rates shall be as follows:**

Building BN-1 and BN-2:	**1.17 L/S.**
Building BK-1 and BK-2:	**3.66 L/S.**
Building SCB-1:	**3.47 L/S.**

2.3.5 Pressure Reducing Valves

Automatic, hydraulically controlled, pressure reducing valve capable of automatically reducing a higher inlet water pressure to a constant lower outlet water pressure regardless of changing flow rates and/or varying inlet water pressure. The pressure reducing valve assembly size, capacity, flow characteries, pressure drop, and pressure setting as indicated on drawings. The valve assembly shall be equipped with gauges, reducers, unions, by-pass valve, isolation valves, Y-strainers, position indicators, flo-clean strainers, limit switches, and adjustable closing feature.

2.4 FIXTURES

Fixtures shall be water conservation type, in accordance with NAPHCC-01. Fixtures for use by the physically handicapped shall be in accordance with CABO A117.1. Vitreous china, nonabsorbent, hard-burned, and vitrified throughout the body shall be provided. Porcelain enameled ware shall have specially selected, clear white, acid-resisting enamel coating evenly applied on surfaces. No fixture will be accepted that shows cracks, crazes, blisters, thin spots, or other flaws. Fixtures shall be equipped with appurtenances such as traps, faucets, stop valves, and drain fittings. Each fixture and piece of equipment requiring connections to the drainage system, except grease interceptors, shall be equipped with a trap. Brass expansion or toggle bolts capped with acorn nuts shall be provided for supports, and polished chromium-plated pipe, valves, and fittings shall be provided where exposed to view. Fixtures with the supply discharge below the rim shall be equipped with backflow preventers. Internal parts of flush and/or flushometer valves, shower mixing valves, shower head face plates, pop-up stoppers of lavatory waste drains, and pop-up stoppers and overflow tees and shoes of bathtub waste drains may contain acetal resin, fluorocarbon, nylon, acrylonitrile-butadiene-styrene (ABS) or other plastic material, if the material has provided satisfactory service under actual commercial or industrial operating conditions for not less than 2 years. Plastic in contact with hot water shall be suitable for 82 degrees C (180 degrees F) water temperature. Plumbing fixtures shall be as indicated in paragraph PLUMBING FIXTURE SCHEDULE.

2.4.1 Lavatories

Enameled cast-iron lavatories shall be provided with two cast-iron or steel brackets secured to the underside of the apron and drilled for bolting to the wall in a manner similar to the hanger plate. Exposed brackets shall

be porcelain enameled. Vitreous china lavatories shall be oval, countertop type for use in barracks buildings.

2.4.2 Automatic Flushing System

Flushing system shall consist of solenoid-activated flush valve with electrical-operated light beam sensor to energize solenoid. Flushing devices shall be provided as described in paragraph FIXTURES AND FIXTURE TRIMMINGS. Provide 24V/115V transformers as required.

2.5 BACKFLOW PREVENTERS

Backflow preventers shall be approved and listed by the Foundation For Cross-Connection Control & Hydraulic Research. Reduced pressure principle assemblies, double check valve assemblies, atmospheric (nonpressure) type vacuum breakers, and pressure type vacuum breakers shall be tested, approved, and listed in accordance with FCCCHR-01. Backflow preventers with intermediate atmospheric vent shall conform to ASSE ANSI/ASSE 1012. Reduced pressure principle backflow preventers shall conform to ASSE 1013. Hose connection vacuum breakers shall conform to ASSE ANSI/ASSE 1011. Pipe applied atmospheric type vacuum breakers shall conform to ASSE ANSI/ASSE 1001. Air gaps in plumbing systems shall conform to ASME A112.1.2. Provide indirect drain lines to floor sinks as required.

2.6 DRAINS

2.6.1 Floor and Shower Drains

Floor and shower drains shall consist of a galvanized body, integral seepage pan, and adjustable perforated or slotted chromium-plated bronze, nickel-bronze, or nickel-brass strainer, consisting of grate and threaded collar. Floor drains shall be cast iron except where metallic waterproofing membrane is installed. Drains shall be of double drainage pattern for embedding in the floor construction. The seepage pan shall have weep holes or channels for drainage to the drainpipe. The strainer shall be adjustable to floor thickness. A clamping device for attaching flashing or waterproofing membrane to the seepage pan without damaging the flashing or waterproofing membrane shall be provided when required. Drains shall be provided with threaded or caulked connection. In lieu of a caulked joint between the drain outlet and waste pipe, a neoprene rubber gasket conforming to ASTM C 564 may be installed, provided that the drain is specifically designed for the rubber gasket compression type joint. Floor and shower drains shall conform to ASME A112.21.1M.

2.6.1.1 Drains and Backwater Valves

Drains and backwater valves installed in connection with waterproofed floors or shower pans shall be equipped with bolted-type device to securely clamp flashing.

2.6.2 Area Drains

Area drains shall be plain pattern with polished stainless steel perforated or slotted grate and bottom outlet. The drain shall be circular or square with a 300 mm (12 inch) nominal overall width or diameter and 250 mm (10 inch) nominal overall depth. Drains shall be cast iron with manufacturer's standard coating. Grate shall be easily lifted out for cleaning. Outlet shall be suitable for inside caulked connection to drain pipe. Drains shall conform to ASME A112.21.1M.

2.6.3 Floor Sinks

Floor sinks shall be square, with 300 mm (12 inch) nominal overall width and 250 mm (10 inch) nominal overall depth. Floor sink shall have an acid-resistant enamel interior finish with cast-iron body, aluminum sediment bucket, and perforated grate of cast iron in industrial areas and stainless steel in finished areas. The outlet pipe size shall be as indicated or of the same size as the connecting pipe.

2.7 TRAPS

Unless otherwise specified, traps shall be plastic per ASTM F 409 or copper-alloy adjustable tube type with slip joint inlet and swivel. Traps shall be without a cleanout. Tubes shall be copper alloy with walls not less than 0.813 mm (0.032 inch) thick within commercial tolerances, except on the outside of bends where the thickness may be reduced slightly in manufacture by usual commercial methods. Inlets shall have rubber washer and copper alloy nuts for slip joints above the discharge level. Swivel joints shall be below the discharge level and shall be of metal-to-metal or metal-to-plastic type as required for the application. Nuts shall have flats for wrench grip. Outlets shall have internal pipe thread, except that when required for the application, the outlets shall have sockets for solder-joint connections. The depth of the water seal shall be not less than 50 mm (2 inches). The interior diameter shall be not more than 3.2 mm (1/8 inch) over or under the nominal size, and interior surfaces shall be reasonably smooth throughout. A copper alloy "P" trap assembly consisting of an adjustable "P" trap and threaded trap wall nipple with cast brass wall flange shall be provided for lavatories. The assembly shall be a standard manufactured unit and may have a rubber-gasketed swivel joint.

2.8 GREASE INTERCEPTOR

Grease interceptor of the size indicated shall be of reinforced concrete, with removable three-section, 9.5 mm (3/8 inch) checker-plate cover, and shall be installed outside the building. Interceptors shall be tested and rated in accordance with PDI G-101. Concrete shall have 21 MPa minimum compressive strength at 28 days.

2.9 WATER HEATERS

Water heater types and capacities shall be as indicated. Each primary water heater shall have controls with an adjustable range that includes 32 to 49 degrees C (90 to 120 degrees F). Each gas-fired water heater and booster water heater shall have controls with an adjustable range that includes 49 to 82 degrees C (120 to 180 degrees F). Hot water systems utilizing recirculation systems shall be tied into building off-hour controls. The thermal efficiencies and standby heat losses shall conform to TABLE III for each type of water heater specified. The only exception is that storage water heaters and hot water storage tanks having more than 2000 liters storage capacity need not meet the standard loss requirement if the tank surface area is not insulated to R-12.5 and if a standing light is not used. Plastic materials polyetherimide (PEI) and polyethersulfone (PES) are forbidden to be used for vent piping of combustion gases.

2.9.1 Automatic Storage Type

Heaters shall be complete with control system, temperature gauge, and

pressure gauge and shall have ASME rated combination pressure and temperature relief valve.

2.9.1.1 Gas-Fired Type

Gas-fired water heaters shall conform to ANSI Z21.10.1 when input is 22 KW (75,000 But per hour) or less or ANSI Z21.10.3 for heaters with input greater than 22 KW (75,000 But per hour). Water heaters shall be furnished with electronic ignition. See equipment schedules on contract drawings.

2.9.1.2 Electric Type

Electric type water heaters shall conform to UL 174 with dual heating elements. Each element shall be 4.5 KW. The elements shall be wired so that only one element can operate at a time. See equipment schedules on contract drawings.

2.9.2 Electric Booster Heater

Booster heaters shall be as specified in Section 11400 FOOD SERVICE EQUIPMENT.

2.10 HOT-WATER STORAGE TANKS

Hot-water storage tanks shall be constructed by one manufacturer, ASME stamped for the working pressure, and shall have the National Board (ASME) registration. The tank shall be cement-lined or glass-lined steel type in accordance with AWWA D100. The heat loss shall conform to TABLE III as determined by the requirements of ASHRAE 90.1. Each tank shall be equipped with a thermometer, conforming to ASTM E 1, Type I, Class 3, Range C, style and form as required for the installation, and with 175 mm (7 inch) scale. Thermometer shall have a separable socket suitable for a 20 mm (3/4 inch) tapped opening. Tanks shall be equipped with a pressure gauge 155 mm (6 inch) minimum diameter face. Insulation shall be as specified in Section 15080 THERMAL INSULATION FOR MECHANICAL SYSTEMS. Storage tank capacity shall be as shown.

2.11 EXPANSION TANKS

Expansion tanks shall be welded steel, constructed, tested and stamped in accordance with ASME BPV VIII Div 1 for a working pressure of 862 kPa (125 psig) and precharged to the minimum operating pressure. Expansion tanks shall have a replaceable bladder and be the captive air type. Tanks shall accommodate expanded water of the system generated within the normal operating temperature range, limiting this pressure increase at all components in the system to the maximum allowable pressure at those components. Each tank air chamber shall be fitted with an air charging valve. Tanks shall be supported by steel legs or bases for vertical installation or steel saddles for horizontal installations. The only air in the system shall be the permanent sealed-in air cushion contained within the expansion tank.

2.12 PUMPS

2.12.1 Sump Pumps

Sump pumps shall be of capacities indicated. The pumps shall be of the automatic, electric motor-driven, submerged type, complete with necessary control equipment and with a split or solid cast-iron or steel cover plate.

The pumps shall be direct-connected by an approved flexible coupling to a vertical electric motor having a continuous oiling device or packed bearings sealed against dirt and moisture. Motors shall be totally enclosed, fan-cooled of sizes as indicated and shall be equipped with an across-the-line magnetic controller in a NEMA 250, Type 1 enclosed, across-the-line, magnetic controller. Each pump shall be fitted with a high-grade thrust bearing mounted above the floor. Each shaft shall have an alignment bearing at each end, and the suction inlet shall be between 75 and 150 mm above the sump bottom. The suction side of each pump shall have a strainer of ample capacity. A float switch assembly, with the switch completely enclosed in a NEMA 250, Type 1 enclosure, shall start and stop each motor at predetermined water levels. The discharge line from each pump shall be provided with a union or flange, a nonclog swing check valve, and a stop valve in an accessible location near the pump.

2.12.2 Circulating Pumps

Domestic hot water circulating pumps shall be electrically driven, single-stage, centrifugal, with mechanical seals, suitable for the intended service. Pump capacities, efficiencies, motor sizes, speeds, and impeller types shall be as shown. Pump and motor shall be integrally mounted on a cast-iron or steel subbase, or supported by the piping on which it is installed. The shaft shall be one-piece, heat-treated, corrosion-resisting steel with impeller and smooth-surfaced housing of bronze. Motor shall be totally enclosed, fan-cooled and shall have sufficient wattage (horsepower) for the service required. Pump shall conform to HI ANSI/HI 1.1-1.5. Each pump motor shall be equipped with an across-the-line magnetic controller in a NEMA 250, Type 1 enclosure with "START-STOP" switch in cover. Pump motors smaller than 746 W (Fractional horsepower pump motors) shall have integral thermal overload protection in accordance with Section 16415 ELECTRICAL WORK, INTERIOR. Guards shall shield exposed moving parts.

2.12.3 Flexible Connectors

Flexible connectors shall be provided at the suction and discharge of each pump that is 1 hp or larger. Connectors shall be constructed of neoprene, rubber, or braided bronze, with Class 150 standard flanges. Flexible connectors shall be line size and suitable for the pressure and temperature of the intended service.

2.13 PLATE HEAT EXCHANGER

a. Furnish and install as shown on the plans, a double wall Plate and Frame Heat Exchanger. The Plate and Frame Heat Exchanger manufacturer, shall have an extensive background in the design and fabrication of Plate and Frame Heat Exchangers. The manufacturer shall have a minimum of five (5) years experience in the fabrication of plate heat exchangers. Double Wall Heat Exchangers shall be designed, constructed, and tested in accordance with Section VIII, Division 1 of the ASME Pressure Vessel Code, and shall be code stamped.

b. Preference will be given to single pass designs with all connections on the fixed cover. The fixed and movable covers shall be of sufficient thickness, for the design pressure and code requirements and shall have no reinforcement or stiffeners. The moveable cover shall be provided with a steel roller bearing, for units greater than 1270 mm (50 inch) in height (from bottom of feet). This allows the movable cover to be moved without additional rigging or handling equipment. Carrying and guide bar, shall be designed to allow for

expansion of at least 15%. The carrying and guide bar guiding system shall be precision manufactured of stainless steel, to prohibit corrosion and facilitate movement of the plates, painted or plated surfaces are not permitted. Entire frame shall be bolted together to allow unit to be field assembled, to permit rigging into place. Welding of frame components is not permitted. Plate and carrying bar designs, shall permit the removal and access to any plate in the plate pack, without the need to remove any other plates. Provide lifting lugs, designed to allow lifting of the entire units flooded weight. All steel surface shall be thoroughly cleaned and prepared for painting per SSPC-SPIO63T, painting over mill scale is not acceptable. All steel components shall be epoxy coated.

c. Connections equal to or less than 50 mm (2 inch) shall be stainless steel NPT type. To avoid leakage on port area, studded port design shall be provided on heat exchangers with connections greater than 50 mm (2 inch). Flanged nozzle connections are not acceptable.

d. Compression bolts shall not require special tools and shall be equipped with lock washers at the movable cover, to facilitate opening and closing of the unit from the fixed cover only. Compression bolts shall be equipped with captive nuts at the fixed cover and threaded nuts at the movable cover. Welding of the nut to the closure bolt is prohibited. Bolts with rolled threads to reduce galling, and double width hex nuts, to adequately distribute the load, shall be provided. Ball bearing box washers shall be located at all critical closing bolts on units greater than 1270 mm (50 inch) in height. Bolts, shall be liberally coated with Lubriplate FGL-2 for lubrication and rust prevention, and covered with a plastic sleeving for protection from the environment and prevent bodily injury. Zinc plating is prohibited.

e. The double wall plate and frame heat exchangers shall consists of pressed type 304 stainless steel plates (or other alloys), to provide the required heat transfer area to meet the operating conditions specified. Individual plates shall be pressed from a homogeneous single metal sheet in one step. No multi-stage pressing of one sheet is allowed. Each heat transfer plate to be with herringbone corrugations, to optimize heat transfer, with nominal pressure losses. Corrugations to be designed to provide support to adjacent plates at evenly distributed support points. This allows pressurization of each circuit to a full differential of 1.5 times the design pressure, for one hour without buckling or deformation of the heat transfer plates. All plates and gaskets shall be permanently marked to identify quality and material. Each heat transfer plate shall have a built-in-self aligning system, to accurately locate the plates in the frame assembly, and prevent lateral plate movement, while maintaining maximum gasket contact under pressure. Plates shall be reinforced on the upper and lower mounting slots, to avoid bending of the hangers on the plates. The double wall plate and frame heat exchanger, shall be designed to perform to various capacities and pressure drops as shown on the schedule. Plates to be 304 stainless steel with II B finish and tapered gasket grooves. The plate pack shall be covered with an aluminum shroud in accordance with OSHA.

f. Gaskets shall have relieving grooves to prevent intermixing of fluids and cause leakage to flow to the outside of the unit. One piece molded gaskets shall be required. These gaskets shall fit around both the heat transfer area and port holes. Preference shall be given to non-glued gasketing systems. If an adhesive is necessary, it shall be

compatible with the gasket material and the fluids. The adhesive shall be a 2 component, heat cured epoxy glue.

g. The double wall plate heat exchanger shall be designed to withstand full test pressure in one circuit with zero pressure in the alternate circuit. Hydrostatic testing shall be in accordance with ASME Section VIII, Division, 1 Paragraph UG-99.

2.14 FOOD SERVICE EQUIPMENT

For Food Service Equipment Specifications, see Section 11400 FOOD SERVICE EQUIPMENT.

2.15 LEAK DETECTION SYSTEM FOR WATER

The leak detection system shall consist of a monitoring panel, cable, and water sensors. Dorlen Products "Water Alert" sensing alarm with Model RI-2 Remote indicator or approved equal. The system shall consist of the following:

a. The panel shall contain a power on-off switch, and audible alarm, an alarm silence switch, a test switch, and an indicator light for each water sensor (minimum of 6 each). The panel shall be table mounted with a 120 volt power connection.

b. The water sensors shall be mounted (where indicated) on the concrete floor in the crawlspace and wired to the panel.

c. The sensor cable size and type shall be as recommended by the system manufacturer for the proper operation of the system.

2.15.1 Operation

The leak detection panel shall monitor each individual sensor. When water is detected by a sensor, the corresponding visual indicator will light and the alarm will sound. The silencer switch shall silence the audible alarm but the visual indicator shall remain lit until the water is removed from the sensor. The test switch shall illuminate all the indicators and sound the alarm to ensure proper operation of the system.

2.15.2 Installation

The installation of the leak detection system shall be in accordance with the manufacturer's recommendation.

PART 3 EXECUTION

3.1 GENERAL INSTALLATION REQUIREMENTS

Piping located in air plenums shall conform to NFPA 90A requirements. Piping located in shafts that constitute air ducts or that enclose air ducts shall be noncombustible in accordance with NFPA 90A. The plumbing system shall be installed complete with necessary fixtures, fittings, traps, valves, and accessories. Water and drainage piping shall be extended 1.5 m outside the building, unless otherwise indicated. A full port ball valve and drain shall be installed on the water service line inside the building approximately 150 mm above the floor from point of entry. Piping shall be connected to the exterior service lines or capped or plugged if the exterior service is not in place. Sewer and water pipes

shall be laid in separate trenches, except when otherwise shown. Exterior underground utilities shall be at least 300 mm below the finish grade or as indicated on the drawings. If trenches are closed or the pipes are otherwise covered before being connected to the service lines, the location of the end of each plumbing utility shall be marked with a stake or other acceptable means. Valves shall be installed with control no lower than the valve body. Buried piping near and under buildings shall be installed per granular termite barrier manufacturer's recommendations. All exposed piping in the kitchen of Dining Facility DN-1 shall be chromium plated copper alloy or stainless steel.

3.1.1 Water Pipe, Fittings, and Connections

3.1.1.1 Utilities

The piping shall be extended to fixtures, outlets, and equipment. The hot-water and cold-water piping system shall be arranged and installed to permit draining. The supply line to each item of equipment or fixture, except faucets, flush valves, or other control valves which are supplied with integral stops, shall be equipped with a shutoff valve to enable isolation of the item for repair and maintenance without interfering with operation of other equipment or fixtures. Supply piping to fixtures, faucets, shower heads, and flushing devices shall be anchored to prevent movement.

3.1.1.2 Cutting and Repairing

The work shall be carefully laid out in advance, and unnecessary cutting of construction shall be avoided. Damage to building, piping, wiring, or equipment as a result of cutting shall be repaired by mechanics skilled in the trade involved.

3.1.1.3 Protection of Fixtures, Materials, and Equipment

Pipe openings shall be closed with caps or plugs during installation. Fixtures and equipment shall be tightly covered and protected against dirt, water, chemicals, and mechanical injury. Upon completion of the work, the fixtures, materials, and equipment shall be thoroughly cleaned, adjusted, and operated. Safety guards shall be provided for exposed rotating equipment.

3.1.1.4 Mains, Branches, and Runouts

Piping shall be installed as indicated. Pipe shall be accurately cut and worked into place without springing or forcing. Structural portions of the building shall not be weakened. Aboveground piping shall run parallel with the lines of the building, unless otherwise indicated. Branch pipes from service lines may be taken from top, bottom, or side of main, using crossover fittings required by structural or installation conditions. Supply pipes, valves, and fittings shall be kept a sufficient distance from other work and other services to permit not less than 12 mm between finished covering on the different services. Bare and insulated water lines shall not bear directly against building structural elements so as to transmit sound to the structure or to prevent flexible movement of the lines. Water pipe shall not be buried in or under floors unless specifically indicated or approved. Changes in pipe sizes shall be made with reducing fittings. Use of bushings will not be permitted except for use in situations in which standard factory fabricated components are furnished to accommodate specific excepted installation practice. Change

in direction shall be made with fittings, except that bending of pipe 100 mm (4 inches) and smaller will be permitted, provided a pipe bender is used and wide sweep bends are formed. The center-line radius of bends shall be not less than six diameters of the pipe. Bent pipe showing kinks, wrinkles, flattening, or other malformations will not be acceptable.

3.1.1.5 Pipe Drains

Pipe drains indicated shall consist of 20 mm (3/4 inch) hose bibb with renewable seat and gate or ball valve ahead of hose bibb. At other low points, 20 mm (3/4 inch) brass plugs or caps shall be provided. Disconnection of the supply piping at the fixture is an acceptable drain.

3.1.1.6 Expansion and Contraction of Piping

Allowance shall be made throughout for expansion and contraction of water pipe. Each hot-water and hot-water circulation riser shall have expansion loops or other provisions such as offsets, changes in direction, etc., where indicated and/or required. Risers shall be securely anchored as required to force expansion to loops. Branch connections from risers shall be made with ample swing or offset to avoid undue strain on fittings or short pipe lengths. Horizontal runs of pipe over 15 m in length shall be anchored to the wall or the supporting construction about midway on the run to force expansion, evenly divided, toward the ends. Sufficient flexibility shall be provided on branch runouts from mains and risers to provide for expansion and contraction of piping. Flexibility shall be provided by installing one or more turns in the line so that piping will spring enough to allow for expansion without straining.

3.1.1.7 Commercial-Type Water Hammer Arresters

Commercial-type water hammer arresters shall be provided on hot- and cold-water supplies and shall be located as generally indicated, with precise location and sizing to be in accordance with PDI WH 201. Water hammer arresters, where concealed, shall be accessible by means of access doors or removable panels. Commercial-type water hammer arresters shall conform to PDI WH 201. Vertical capped pipe columns will not be permitted.

3.1.2 Joints

Installation of pipe and fittings shall be made in accordance with the manufacturer's recommendations. Mitering of joints for elbows and notching of straight runs of pipe for tees will not be permitted. Joints shall be made up with fittings of compatible material and made for the specific purpose intended.

3.1.2.1 Threaded

Threaded joints shall have American Standard taper pipe threads conforming to ASME B1.20.1. Only male pipe threads shall be coated with graphite or with an approved graphite compound, or with an inert filler and oil, or shall have a polytetrafluoroethylene tape applied.

3.1.2.2 Union and Flanged

Unions, flanges and mechanical couplings shall not be concealed in walls, ceilings, or partitions. Unions shall be used on pipe sizes 65 mm (2-1/2 inches) and smaller; flanges shall be used on pipe sizes 80 mm (3 inches) and larger.

3.1.2.3 Cast Iron Soil, Waste and Vent Pipe

Bell and spigot compression and hubless gasketed clamp joints for soil, waste and vent piping shall be installed per the manufacturer's recommendations.

3.1.2.4 Copper Tube and Pipe

The tube or fittings shall not be annealed when making connections. Connections shall be made with a multiflame torch.

a. Brazed. Brazed joints shall be made in conformance with AWS B2.2, MSS SP-73, and CDA-02 with flux and are acceptable for line sizes. Copper to copper joints shall include the use of copper-phosphorus or copper-phosphorus-silver brazing metal without flux. Brazing of dissimilar metals (copper to bronze or brass) shall include the use of flux with either a copper-phosphorus, copper-phosphorus-silver or a silver brazing filler metal.

b. Soldered. Soldered joints shall be made with flux and are only acceptable for lines 50 mm (2 inches) and smaller. Soldered joints shall conform to ASME B31.5 and CDA-02.

3.1.3 Dissimilar Pipe Materials

Connections between ferrous and non-ferrous copper pipe shall be made with dielectric unions or flange waterways. Connecting joints between plastic and metallic pipe shall be made with transition fitting for the specific purpose.

3.1.4 Pipe Sleeves and Flashing

Pipe sleeves shall be furnished and set in their proper and permanent location.

3.1.4.1 Sleeve Requirements

Pipes passing through concrete or masonry walls or concrete floors or roofs shall be provided with pipe sleeves fitted into place at the time of construction. Sleeves are not required for cast-iron soil pipe passing through concrete slab on grade, except where penetrating a membrane waterproof floor. A modular mechanical type sealing assembly may be installed in lieu of a waterproofing clamping flange and caulking and sealing of annular space between pipe and sleeve. The seals shall consist of interlocking synthetic rubber links shaped to continuously fill the annular space between the pipe and sleeve with corrosion-protected carbon steel bolts, nuts, and pressure plates. The links shall be loosely assembled with bolts to form a continuous rubber belt around the pipe with a pressure plate under each bolt head and each nut. After the seal assembly is properly positioned in the sleeve, tightening of the bolt shall cause the rubber sealing elements to expand and provide a watertight seal between the pipe and the sleeve. Each seal assembly shall be sized as recommended by the manufacturer to fit the pipe and sleeve involved. Sleeves shall not be installed in structural members, except where indicated or approved. Rectangular and square openings shall be as detailed. Each sleeve shall extend through its respective floor, or roof, and shall be cut flush with each surface, except for special circumstances.

Pipe sleeves passing through floors in wet areas such as mechanical equipment rooms, lavatories, kitchens, and other plumbing fixture areas shall extend a minimum of 100 mm above the finished floor. Unless otherwise indicated, sleeves shall be of a size to provide a minimum of 6 mm (1/4 inch) clearance between bare pipe and inside of sleeve or between jacket over insulation and sleeves. Sleeves in bearing walls shall be steel pipe or cast-iron pipe. Sleeves for membrane waterproof floors shall be steel pipe, cast-iron pipe, or plastic pipe. Membrane clamping devices shall be provided on pipe sleeves for waterproof floors. Sleeves in nonbearing walls or ceilings may be steel pipe, cast-iron pipe, galvanized sheet metal with lock-type longitudinal seam, or moisture-resistant fiber or plastic. Plastic sleeves shall not be used in nonbearing fire walls, roofs, or floor/ceilings. Except as otherwise specified, the annular space between pipe and sleeve, or between jacket over insulation and sleeve, shall be sealed as indicated with sealants conforming to ASTM C 920 and with a primer, backstop material and surface preparation as specified in Section 07900 JOINT SEALING. Pipes passing through sleeves in concrete floors over crawl spaces shall be sealed as specified above. The annular space between pipe and sleeve or between jacket over insulation and sleeve shall not be sealed for interior walls which are not designated as fire rated. Sleeves through below-grade walls in contact with earth shall be recessed 12 mm from wall surfaces on both sides. Annular space between pipe and sleeve shall be filled with backing material and sealants in the joint between the pipe and concrete or masonry wall as specified above. Sealant selected for the earth side of the wall shall be compatible with dampproofing/waterproofing materials that are to be applied over the joint sealant.

3.1.4.2 Flashing Requirements

Pipes passing through roof or floor waterproofing membrane shall be installed through a 4.9 kg per square meter (16 ounce) copper flashing, each within an integral skirt or flange. Flashing shall be suitably formed, and the skirt or flange shall extend not less than 200 mm from the pipe and shall be set over the roof or floor membrane in a solid coating of bituminous cement. The flashing shall extend up the pipe a minimum of 250 mm. For cleanouts, the flashing shall be turned down into the hub and caulked after placing the ferrule. Pipes passing through pitched roofs shall be flashed, using lead or copper flashing, with an adjustable integral flange of adequate size to extend not less than 200 mm from the pipe in all directions and lapped into the roofing to provide a watertight seal. The annular space between the flashing and the bare pipe or between the flashing and the metal-jacket-covered insulation shall be sealed as indicated. Flashing for dry vents shall be turned down into the pipe to form a waterproof joint. Pipes, up to and including 250 mm (10 inches) in diameter, passing through roof or floor waterproofing membrane may be installed through a cast-iron sleeve with caulking recess, anchor lugs, flashing-clamp device, and pressure ring with brass bolts. Flashing shield shall be fitted into the sleeve clamping device. Pipes passing through wall waterproofing membrane shall be sleeved as described above. A waterproofing clamping flange shall be installed.

3.1.4.3 Waterproofing

Waterproofing at floor-mounted water closets shall be accomplished by forming a flashing guard from soft-tempered sheet copper. The center of the sheet shall be perforated and turned down approximately 40 mm to fit between the outside diameter of the drainpipe and the inside diameter of the cast-iron or steel pipe sleeve. The turned-down portion of the

flashing guard shall be embedded in sealant to a depth of approximately 40 mm; then the sealant shall be finished off flush to floor level between the flashing guard and drainpipe. The flashing guard of sheet copper shall extend not less than 200 mm from the drainpipe and shall be lapped between the floor membrane in a solid coating of bituminous cement. If cast-iron water closet floor flanges are used, the space between the pipe sleeve and drainpipe shall be sealed with sealant and the flashing guard shall be upturned approximately 40 mm to fit the outside diameter of the drainpipe and the inside diameter of the water closet floor flange. The upturned portion of the sheet fitted into the floor flange shall be sealed.

3.1.4.4 Optional Counterflashing

Instead of turning the flashing down into a dry vent pipe, or caulking and sealing the annular space between the pipe and flashing or metal-jacket-covered insulation and flashing, counterflashing may be accomplished by utilizing the following:

a. A standard roof coupling for threaded pipe up to 150 mm (6 inches) in diameter.

b. A tack-welded or banded-metal rain shield around the pipe.

3.1.4.5 Pipe Penetrations of Slab on Grade Floors

Where pipes, fixture drains, floor drains, cleanouts or similar items penetrate slab on grade floors, except at penetrations of floors with waterproofing membrane as specified in paragraphs Flashing Requirements and Waterproofing. Penetrations shall be sealed as indicated on the drawings.

3.1.5 Fire Seal

Where pipes pass through fire walls, fire-partitions, fire-rated pipe chase walls or floors above grade, a fire seal shall be provided as specified in Section 07840 FIRESTOPPING.

3.1.6 Supports

3.1.6.1 General

Hangers used to support piping 50 mm (2 inches) and larger shall be fabricated to permit adequate adjustment after erection while still supporting the load. Pipe guides and anchors shall be installed to keep pipes in accurate alignment, to direct the expansion movement, and to prevent buckling, swaying, and undue strain. Piping subjected to vertical movement when operating temperatures exceed ambient temperatures shall be supported by variable spring hangers and supports or by constant support hangers. In the support of multiple pipe runs on a common base member, a clip or clamp shall be used where each pipe crosses the base support member. Spacing of the base support members shall not exceed the hanger and support spacing required for an individual pipe in the multiple pipe run. Threaded sections of rods shall not be formed or bent.

3.1.6.2 Pipe Supports and Structural Bracing, Seismic Requirements

Piping and attached valves shall be supported and braced to resist seismic loads as specified Section 13080. Structural steel required for reinforcement to properly support piping, headers, and equipment, but not shown, shall be provided. Material used for supports shall be as specified

in Section 05120 STRUCTURAL STEEL.

3.1.6.3 Pipe Hangers, Inserts, and Supports

Installation of pipe hangers, inserts and supports shall conform to MSS SP-58 and MSS SP-69, except as modified herein.

a. Types 5, 12, and 26 shall not be used.

b. Type 3 shall not be used on insulated pipe.

c. Type 18 inserts shall be secured to concrete forms before concrete is placed. Continuous inserts which allow more adjustment may be used if they otherwise meet the requirements for type 18 inserts.

d. Type 19 and 23 C-clamps shall be torqued per MSS SP-69 and shall have both locknuts and retaining devices furnished by the manufacturer. Field-fabricated C-clamp bodies or retaining devices are not acceptable.

e. Type 20 attachments used on angles and channels shall be furnished with an added malleable-iron heel plate or adapter.

f. Type 24 may be used only on trapeze hanger systems or on fabricated frames.

g. Type 39 saddles shall be used on insulated pipe 100 mm (4 inches) and larger when the temperature of the medium is 15 degrees C or higher. Type 39 saddles shall be welded to the pipe.

h. Type 40 shields shall:

(1) Be used on insulated pipe less than 100 mm (4 inches).

(2) Be used on insulated pipe 100 mm (4 inches) and larger when the temperature of the medium is 15 degrees C or less.

(3) Have a high density insert for pipe 50 mm (2 inches) and larger and for smaller pipe sizes when the insulation is suspected of being visibly compressed, or distorted at or near the shield/insulation interface. High density inserts shall have a density of 128 kg per cubic meter (8 pcf) or greater.

i. Horizontal pipe supports shall be spaced as specified in MSS SP-69 and a support shall be installed not over 300 mm from the pipe fitting joint at each change in direction of the piping. Pipe supports shall be spaced not over 1.5 m apart at valves. Horizontal pipe runs shall include allowances for expansion and contraction.

j. Vertical pipe shall be supported at each floor, except at slab-on-grade, at intervals of not more than 4.5 m nor more than 2 m from end of risers, and at vent terminations. Vertical pipe risers shall include allowances for expansion and contraction.

k. Type 40 shields used on insulated pipe shall have high density inserts with a density of 128 kg per cubic meter (8 pcf) or greater.

l. Type 35 guides using steel, reinforced polytetrafluoroethylene (PTFE) or graphite slides shall be provided to allow longitudinal pipe movement. Slide materials shall be suitable for the system operating temperatures, atmospheric conditions, and bearing loads encountered. Lateral restraints shall be provided as needed. Where steel slides do not require provisions for lateral restraint the following may be used:

(1) On pipe 100 mm (4 inches) and larger when the temperature of the medium is 15 degrees C or higher, a Type 39 saddle, welded to the pipe, may freely rest on a steel plate.

(2) On pipe less than 100 mm (4 inches) a Type 40 shield, attached to the pipe or insulation, may freely rest on a steel plate.

(3) On pipe 100 mm (4 inches) and larger carrying medium less that 15 degrees C a Type 40 shield, attached to the pipe or insulation, may freely rest on a steel plate.

m. Pipe hangers on horizontal insulated pipe shall be the size of the outside diameter of the insulation. The insulation shall be continuous through the hanger on all pipe sizes and applications.

n. Where there are high system temperatures and welding to piping is not desirable, the type 35 guide shall include a pipe cradle, welded to the guide structure and strapped securely to the pipe. The pipe shall be separated from the slide material by at least 100 mm or by an amount adequate for the insulation, whichever is greater.

3.1.7 Pipe Cleanouts

Pipe cleanouts shall be the same size as the pipe except that cleanout plugs larger than 100 mm (4 inches) will not be required. A cleanout installed in connection with cast-iron soil pipe shall consist of a long-sweep 1/4 bend or one or two 1/8 bends extended to the place shown. An extra-heavy cast-brass or cast-iron ferrule with countersunk cast-brass head screw plug shall be caulked into the hub of the fitting and shall be flush with the floor. Cleanouts in connection with other pipe, where indicated, shall be T-pattern, 90-degree branch drainage fittings with cast-brass screw plugs, except plastic plugs shall be installed in plastic pipe. Plugs shall be the same size as the pipe up to and including 100 mm (4 inches). Cleanout tee branches with screw plug shall be installed at the foot of soil and waste stacks, at the foot of interior downspouts, on each connection to building storm drain where interior downspouts are indicated, and on each building drain outside the building. Cleanout tee branches may be omitted on stacks in single story buildings with slab-on-grade construction or where less than 450 mm of crawl space is provided under the floor. Cleanouts on pipe concealed in partitions shall be provided with chromium plated bronze, nickel bronze, nickel brass or stainless steel flush type access cover plates. Round access covers shall be provided and secured to plugs with securing screw. Square access covers may be provided with matching frames, anchoring lugs and cover screws. Cleanouts in finished walls shall have access covers and frames installed flush with the finished wall. Cleanouts installed in finished floors subject to foot traffic shall be provided with a chrome-plated cast brass, nickel brass, or nickel bronze cover secured to the plug or cover frame and set flush with the finished floor. Heads of fastening screws shall not

project above the cover surface. Where cleanouts are provided with adjustable heads, the heads shall be cast iron.

3.2 WATER HEATERS AND HOT WATER STORAGE TANKS

3.2.1 Relief Valves

No valves shall be installed between a relief valve and its water heater or storage tank. The P&T relief valve shall be installed where the valve actuator comes in contact with the hottest water in the heater. Whenever possible, the relief valve shall be installed directly in a tapping in the tank or heater; otherwise, the P&T valve shall be installed in the hot-water outlet piping. A vacuum relief valve shall be provided on the cold water supply line to the hot-water storage tank or water heater and mounted above and within 150 mm above the top of the tank or water heater.

3.2.2 Installation of Gas- Fired Water Heater

Installation shall conform to NFPA NFPA 54/ANSI Z223.1 for gas fired. Storage water heaters that are not equipped with integral heat traps and having vertical pipe risers shall be installed with heat traps directly on both the inlet and outlet. Circulating systems need not have heat traps installed. An acceptable heat trap may be a piping arrangement such as elbows connected so that the inlet and outlet piping make vertically upward runs of not less than 600 mm just before turning downward or directly horizontal into the water heater's inlet and outlet fittings. Commercially available heat traps, specifically designed by the manufacturer for the purpose of effectively restricting the natural tendency of hot water to rise through vertical inlet and outlet piping during standby periods may also be approved.

3.2.3 Heat Traps

Piping to and from each water heater and hot water storage tank shall be routed horizontally and downward a minimum of 600 mm before turning in an upward direction.

3.2.4 Connections to Water Heaters

Connections of metallic pipe to water heaters shall be made with dielectric unions or flanges.

3.3 FIXTURES AND FIXTURE TRIMMINGS

Angle stops, straight stops, stops integral with the faucets, or concealed type of lock-shield, and loose-key pattern stops for supplies with threaded, sweat or solvent weld inlets shall be furnished and installed with fixtures. Where connections between copper tubing and faucets are made by rubber compression fittings, a beading tool shall be used to mechanically deform the tubing above the compression fitting. Exposed traps and supply pipes for fixtures and equipment shall be connected to the rough piping systems at the wall, unless otherwise specified under the item. Floor and wall escutcheons shall be as specified. Drain lines and hot water lines of fixtures for handicapped personnel shall be insulated and do not require polished chrome finish. Plumbing fixtures and accessories shall be installed within the space shown.

3.3.1 Fixture Connections

Where space limitations prohibit standard fittings in conjunction with the cast-iron floor flange, special short-radius fittings shall be provided. Connections between earthenware fixtures and flanges on soil pipe shall be made gastight and watertight with a closet-setting compound or neoprene gasket and seal. Use of natural rubber gaskets or putty will not be permitted. Fixtures with outlet flanges shall be set the proper distance from floor or wall to make a first-class joint with the closet-setting compound or gasket and fixture used.

3.3.2 Flushometer Valves

Flushometer valves shall be secured to prevent movement by anchoring the long finished top spud connecting tube to wall adjacent to valve with approved metal bracket. Bumpers for water closet seats shall be installed on the flushometer stop.

3.3.3 Height of Fixture Rims Above Floor

Lavatories shall be mounted with rim 775 mm above finished floor or mounted in countertops as shown on the drawings. Wall-hung drinking fountains and water coolers shall be installed with rim 1020 mm above floor. Wall-hung service sinks shall be mounted with rim 700 mm above the floor. Installation of fixtures for use by the physically handicapped shall be in accordance with CABO A117.1.

3.3.4 Shower Bath Outfits

The area around the water supply piping to the mixing valves and behind the escutcheon plate shall be made watertight by caulking or gasketing.

3.3.5 Fixture Supports

Fixture supports for off-the-floor lavatories, urinals and other fixtures of similar size, design, and use, shall be of the chair-carrier type. The carrier shall provide the necessary means of mounting the fixture, with a foot or feet to anchor the assembly to the floor slab. Adjustability shall be provided to locate the fixture at the desired height and in proper relation to the wall. Support plates, in lieu of chair carrier, shall be fastened to the wall structure only where it is not possible to anchor a floor-mounted chair carrier to the floor slab.

3.3.5.1 Support for Solid Masonry Construction

Chair carrier shall be anchored to the floor slab. Where a floor-anchored chair carrier cannot be used, a suitable wall plate shall be imbedded in the masonry wall.

3.3.5.2 Support for Cellular-Masonry Wall Construction

Chair carrier shall be anchored to floor slab. Where a floor-anchored chair carrier cannot be used, a suitable wall plate shall be fastened to the cellular wall using through bolts and a back-up plate.

3.3.5.3 Support for Steel Stud Frame Partitions

Chair carrier shall be used. The anchor feet and tubular uprights shall be of the heavy duty design; and feet (bases) shall be steel and welded to a square or rectangular steel tube upright. Wall plates, in lieu of floor-anchored chair carriers, shall be used only if adjoining steel

partition studs are suitably reinforced to support a wall plate bolted to these studs.

3.3.6 Backflow Prevention Devices

Plumbing fixtures, equipment, and pipe connections shall not cross connect or interconnect between a potable water supply and any source of nonpotable water. Backflow preventers shall be installed where indicated and in accordance with NAPHCC-01 at all other locations necessary to preclude a cross-connect or interconnect between a potable water supply and any nonpotable substance. In addition backflow preventers shall be installed at all locations where the potable water outlet is below the flood level of the equipment, or where the potable water outlet will be located below the level of the nonpotable substance. Backflow preventers shall be located so that no part of the device will be submerged. Backflow preventers shall be of sufficient size to allow unrestricted flow of water to the equipment, and preclude the backflow of any nonpotable substance into the potable water system. Access shall be provided for maintenance and testing. Each device shall be a standard commercial unit.

3.3.7 Access Panels

Access panels shall be provided for concealed valves and controls, or any item requiring inspection or maintenance. Access panels shall be of sufficient size and located so that the concealed items may be serviced, maintained, or replaced. Access panels shall be as specified in Section 05500 MISCELLANEOUS METAL.

3.3.8 Sight Drains

Sight drains shall be installed so that the indirect waste will terminate 50 mm above the flood rim of the funnel to provide an acceptable air gap.

3.3.9 Traps

Each trap shall be placed as near the fixture as possible, and no fixture shall be double-trapped. Traps installed on cast-iron soil pipe shall be cast iron. Traps installed on steel pipe or copper tubing shall be recess-drainage pattern, or brass-tube type. Traps installed on plastic pipe may be plastic conforming to ASTM D 3311. Traps for acid-resisting waste shall be of the same material as the pipe.

3.4 VIBRATION-ABSORBING FEATURES

Mechanical equipment, including compressors and pumps, shall be isolated from the building structure by approved vibration-absorbing features, unless otherwise shown. Each foundation shall include an adequate number of standard isolation units. Each unit shall consist of machine and floor or foundation fastening, together with intermediate isolation material, and shall be a standard product with printed load rating. Piping connected to mechanical equipment shall be provided with flexible connectors.

3.5 IDENTIFICATION SYSTEMS

3.5.1 Identification Tags

Identification tags made of brass, engraved laminated plastic, or engraved anodized aluminum, indicating service and valve number shall be installed on valves, except those valves installed on supplies at plumbing fixtures.

Tags shall be 35 mm (1-3/8 inch) minimum diameter, and marking shall be stamped or engraved. Indentations shall be black, for reading clarity. Tags shall be attached to valves with No. 12 AWG, copper wire, chrome-plated beaded chain, or plastic straps designed for that purpose.

3.5.2 Color Coding

Color coding for piping identification shall be as specified in Section 09900 PAINTING, GENERAL.

3.6 ESCUTCHEONS

Escutcheons shall be provided at finished surfaces where bare or insulated piping, exposed to view, passes through floors, walls, or ceilings, except in boiler, utility, or equipment rooms. Escutcheons shall be fastened securely to pipe or pipe covering and shall be satin-finish, corrosion-resisting steel, polished chromium-plated zinc alloy, or polished chromium-plated copper alloy. Escutcheons shall be either one-piece or split-pattern, held in place by internal spring tension or setscrew.

3.7 PAINTING

Painting of pipes, hangers, supports, and other iron work, either in concealed spaces or exposed spaces, is specified in Section 09900 PAINTING, GENERAL.

3.8 TESTS, FLUSHING AND DISINFECTION

3.8.1 Plumbing System

The following tests shall be performed on the plumbing system in accordance with NAPHCC-01.

a. Drainage and Vent Systems Tests: 3 meter (10 feet) head 15 minutes

b. Building Sewers Tests: 3 meter (10 feet) head, 15 minutes

c. Water Supply Systems Tests: 689 kpa (100 psig), 1 hour Hydrostatically test piping system at not less than 690 kpa (gage) or 150% of working pressure.

3.8.1.1 Test of Backflow Prevention Assemblies

Backflow prevention assembly shall be tested using gauges specifically designed for the testing of backflow prevention assemblies. Gauges shall be tested annually for accuracy in accordance with the University of Southern California's Foundation of Cross Connection Control and Hydraulic Research or the American Water Works Association Manual of Cross Connection (Manual M-14). Report form for each assembly shall include, as a minimum, the following:

Data on Device	Data on Testing Firm
Type of Assembly	Name
Manufacturer	Address
Model Number	Certified Tester
Serial Number	Certified Tester No.
Size	Date of Test
Location	
Test Pressure Readings	Serial Number and Test Data of

Gauges

If the unit fails to meet specified requirements, the unit shall be repaired and retested.

3.8.2 Defective Work

If inspection or test shows defects, such defective work or material shall be replaced or repaired as necessary and inspection and tests shall be repeated. Repairs to piping shall be made with new materials. Caulking of screwed joints or holes will not be acceptable.

3.8.3 System Flushing

Before tests, potable water piping shall be flushed. In general, sufficient water shall be used to produce a minimum water velocity of 0.762 meters per second (2.5 feet per second) through piping being flushed. Flushing shall be continued until entrained dirt and other foreign materials have been removed and until discharge water shows no discoloration. System shall be drained at low points. Strainer screens shall be removed, cleaned, and replaced in line. After flushing and cleaning, systems shall be prepared for service by immediately filling water piping with clean, fresh potable water. Any stoppage, discoloration, or other damage to the finish, furnishings, or parts of the building due to the Contractor's failure to properly clean the piping system shall be repaired by the Contractor. When the system flushing is complete, the hot-water system shall be adjusted for uniform circulation. Flushing devices and automatic control systems shall be adjusted for proper operation.

3.8.4 Operational Test

Upon completion of and prior to acceptance of the installation, the Contractor shall subject the plumbing system to operating tests to demonstrate satisfactory functional and operational efficiency. Such operating tests shall cover a period of not less than 8 hours for each system and shall include the following information in a report with conclusion as to the adequacy of the system:

a. Time, date, and duration of test.

b. Water pressures at the most remote and the highest fixtures.

c. Operation of each fixture and fixture trim.

d. Operation of each valve, hydrant, and faucet.

e. Pump suction and discharge pressures.

f. Temperature of each domestic hot-water supply.

g. Operation of each floor and roof drain by flooding with water.

h. Operation of each vacuum breaker and backflow preventer.

i. Complete operation of each water pressure booster system, including pump start pressure and stop pressure.

3.8.5 Disinfection

After operational tests are complete, the entire domestic hot- and cold-water distribution system shall be disinfected. System shall be flushed as specified, before introducing chlorinating material. The chlorinating material shall be hypochlorites or liquid chlorine. Water chlorination procedure shall be in accordance with AWWA M20. The chlorinating material shall be fed into the water piping system at a constant rate at a concentration of at least 50 parts per million (ppm). A properly adjusted hypochlorite solution injected into the main with a hypochlorinator, or liquid chlorine injected into the main through a solution-feed chlorinator and booster pump, shall be used. The chlorine residual shall be checked at intervals to ensure that the proper level is maintained. Chlorine application shall continue until the entire main is filled. The water shall remain in the system for a minimum of 24 hours. Each valve in the system being disinfected shall be opened and closed several times during the contact period to ensure its proper disinfection. Following the 24-hour period, no less than 25 ppm chlorine residual shall remain in the system. Water tanks shall be disinfected by the addition of chlorine directly to the filling water. Following a 6 hour period, no less than 50 ppm chlorine residual shall remain in the tank. The system including the tanks shall then be flushed with clean water until the residual chlorine is reduced to less than one part per million. During the flushing period each valve and faucet shall be opened and closed several times. The Contractor shall be responsible for the sampling and testing of water in potable water systems and shall be responsible for all associated costs. From several points in the system the Contractor shall take samples of water in proper disinfection containers in the presence of the Contracting Officer for bacterial examination. The samples of water shall be tested for total coliform organisms (coliform bacteria, fecal coliform, streptococcal, and other bacteria) in accordance with AWWA-01. The testing method used shall be either the multiple-tube fermentation technique or the membrane-filter technique. The sterilizing shall be repeated until tests indicate the absence of coliform organisms (zero mean coliform density per 100 milliliters) in the samples for at least 2 full days. The system will not be accepted until satisfactory bacteriological results have been obtained.

3.9 PLUMBING FIXTURE SCHEDULE

3.9.1 Company Operations Facilities (COF-2)

P-1 WATER CLOSET:

Siphon-jet, elongated bowl, top supply spud, ASME A112.19.2M, floor mounted. Floor flange shall be copper alloy, cast iron, or plastic.

Gasket shall be wax type.

Seat - IAPMO ANSI/IAPMO Z124.5, Type A, white plastic, elongated, open front.

Flushometer Valve - ASSE ANSI/ASSE 1037, large diaphragm type with non-hold-open feature, backcheck angle control stop, and vacuum breaker. Minimum upper chamber inside diameter of not less than 66.7 mm (2-5/8 inches) at the point where the diaphragm is sealed between the upper and lower chambers. The maximum water use shall be 6 liters per flush. Flushometer shall be automatic flushing type. Flushometer shall be equipped with solenoid operator, light beam sensor and manual override button. Flushometer system shall be furnished with electrical boxes,

mounting plates, and low-voltage transformers as required.

P-2 URINAL:

Wall hanging, with integral trap and extended shields, ASME A112.19.2M washout. Top supply connection, back outlet.

Flushometer Valve - Similar to Flushometer Valve for P-1. The maximum water use shall be 3.8 liters per flush. Flushometer shall be automatic flushing type.

P-3 LAVATORY:

Manufacturer's standard sink depth, vitreous china ASME A112.19.2M under-counter mounting.

Faucet - Faucets shall be single control, mixing type. Faucets shall have metal replaceable cartridge control unit or metal cartridge units with diaphragm which can be replaced without special tools. Valves and handles shall be copper alloy. Connection between valve and spout for center-set faucet shall be of rigid metal tubing. The flow shall be limited to 0.16 liters per second at a flowing pressure of 549 kPa.

Handles - Lever type. Cast, formed, or drop forged copper alloy.

Drain - Strainer shall be copper alloy or stainless steel, Pop-up drain shall include stopper, lift rods, jam nut, washer, and tail piece.

P-4 LAVATORY:

Manufacturer's standard sink depth, enameled cast iron ledge back. Nominal size 508 mm (20 inches) wide x 457 mm (18 inches) front to back.

Faucet - Faucets shall be single control, mixing type. Faucets shall have replaceable seats and washers. Faucets shall have metal replaceable cartridge control unit or metal cartridge units with diaphragm which can be replaced without special tools. Valves and handles shall be copper alloy. Connection between valve and spout for center-set faucet shall be of rigid metal tubing. The flow shall be limited to 0.16 liters per second at a flowing pressure of 549 kPa

Handles - Lever type. Cast, formed, or drop forged copper alloy.

P-5 SERVICE SINK:

Enameled cast iron ASME A112.19.1M, copper alloy or stainless steel ASME A112.19.3M trap standard 609.6 mm wide x 508.0 mm deep (24 inches wide x 20 inches deep), splashback 228.6 mm (9 inches) high wall mounted 609.6 mm wide x 508.0 mm deep (24 inches wide x 20 inches deep), splashback 228.6 mm (9 inches) high.

Faucet and Spout - Cast or wrought copper alloy, with top or bottom brace, with backflow preventer. Faucets shall have replaceable seat and the washer shall rotate onto the seat. Handles shall be lever type. Strainers shall have internal threads.

Drain Assembly - Plug, cup strainer, crossbars, jam nuts, washers, couplings, stopper, etc., shall be copper alloy or stainless steel.

Trap - Cast iron, minimum 7.5 cm diameter.

P-6 Shower: Shower heads, CID A-A-240 other than emergency showers, shall include a non-removable, tamperproof device to limit water flow to 0.16 liters per second (2.5 gpm) when tested in accordance with ASME A112.18.1M.

Wall Mounted: Shower head shall be nonadjustable spray, stainless steel or chromium plated brass with ball joint. Handles shall be chrome-plated die cast zinc alloy. Control valves shall be copper alloy and have metal integral parts of copper alloy, nickel alloy, or stainless steel. Valves shall be thermostatic mixing type. Shower head shall be vandalproof with integral back. Mixing value shall be memory positioning type which allows user to turn valve on and off at preferred temperature without readjusting handle position each time.

P-7 WATER COOLER DRINKING FOUNTAINS:

Water cooler drinking fountains shall: be self contained, conform to ARI 1010, use one of the fluorocarbon gases conforming to ARI 700 and ASHRAE 34 which has an Ozone Depletion Potential of less than or equal to 0.05, have a capacity to deliver 30.2 liters per hour (8 gph) of water at 10 degrees C (50 degrees F) with an inlet water temperature of 27 degrees C (80 degrees F) while residing in a room environment of 32 degrees C (90 degrees F), and have self-closing valves. Self-closing valves shall have automatic stream regulators, have a flow control capability, have a push button actuation or have a cross-shaped index metal turn handle without a hood. Exposed surfaces of stainless steel shall have No. 4 general polish finish. Spouts shall provide a flow of water at least 100 mm (4 inches) high so as to allow the insertion of a cup or glass under the flow of water.

Surface Wall-Mounted - Surface wall-mounted units shall be 336.6 mm (13-1/4 inches) wide, 330.2 mm (13 inches) deep, and have a back height of 152.4 to 203.2 mm (6 to 8 inches). The bowl shall be made of corrosion resisting steel. The unit shall have concealed fasteners and be for interior installation.

3.9.2 Company Operations Facilities (COF-3 to COF-7)

P-1 WATER CLOSET:

Siphon-jet, elongated bowl, top supply spud, ASME A112.19.2M, floor mounted. Floor flange shall be copper alloy, cast iron, or plastic.

Gasket shall be wax type.

Seat - IAPMO ANSI/IAPMO Z124.5, Type A, white plastic, elongated, open front.

Flushometer Valve - ASSE ANSI/ASSE 1037, large diaphragm type with non-hold-open feature, backcheck angle control stop, and vacuum breaker. Minimum upper chamber inside diameter of not less than 66.7 mm (2-5/8 inches) at the point where the diaphragm is sealed between the upper and lower chambers. The maximum water use shall be 6 liters per flush. Flushometer shall be automatic flushing type. Flushometer shall be equipped with solenoid operator, light beam sensor and manual override button. Flushometer system shall be furnished with electrical boxes, mounting plates, and low-voltage transformers as required.

P-2 URINAL:

Wall hanging, with integral trap and extended shields, ASME A112.19.2M washout. Top supply connection, back outlet.

Flushometer Valve - Similar to Flushometer Valve for P-1. The maximum water use shall be 3.8 liters per flush. Flushometer shall be automatic flushing type.

P-3 LAVATORY:

Manufacturer's standard sink depth, vitreous china ASME A112.19.2M under-counter mounting.

Faucet - Faucets shall be single control, mixing type. Faucets shall have metal replaceable cartridge control unit or metal cartridge units with diaphragm which can be replaced without special tools. Valves and handles shall be copper alloy. Connection between valve and spout for center-set faucet shall be of rigid metal tubing. The flow shall be limited to 0.16 liters per second at a flowing pressure of 549 kPa.

Handles - Lever type. Cast, formed, or drop forged copper alloy.

Drain - Strainer shall be copper alloy or stainless steel, Pop-up drain shall include stopper, lift rods, jam nut, washer, and tail piece.

P-4 LAVATORY:

Manufacturer's standard sink depth, enameled cast iron ledge back. Nominal size 508 mm (20 inches) wide x 457 mm (18 inches) front to back.

Faucet - Faucets shall be single control, mixing type. Faucets shall have replaceable seats and washers. Faucets shall have metal replaceable cartridge control unit or metal cartridge units with diaphragm which can be replaced without special tools. Valves and handles shall be copper alloy. Connection between valve and spout for center-set faucet shall be of rigid metal tubing. The flow shall be limited to 0.16 liters per second at a flowing pressure of 549 kPa

Handles - Lever type. Cast, formed, or drop forged copper alloy.

P-5 SERVICE SINK:

Enameled cast iron ASME A112.19.1M, copper alloy or stainless steel ASME A112.19.3M trap standard 609.6 mm wide x 508.0 mm deep (24 inches wide x 20 inches deep), splashback 228.6 mm (9 inches) high wall mounted 609.6 mm wide x 508.0 mm deep (24 inches wide x 20 inches deep), splashback 228.6 mm (9 inches) high.

Faucet and Spout - Cast or wrought copper alloy, with top or bottom brace, with backflow preventer. Faucets shall have replaceable seat and the washer shall rotate onto the seat. Handles shall be lever type. Strainers shall have internal threads.

Drain Assembly - Plug, cup strainer, crossbars, jam nuts, washers, couplings, stopper, etc., shall be copper alloy or stainless steel.

Trap - Cast iron, minimum 7.5 cm diameter.

P-6 MAINTENANCE SINK

Enameled cast iron ASME A112.19.1M, copper alloy or stainless steel ASME A112.19.3M trap standard 609.6 mm wide x 508.0 mm deep (24 inches wide x 20 inches deep), splashback 228.6 mm (9 inches) high wall mounted 609.6 mm wide x 508.0 mm deep (24 inches wide x 20 inches deep), splashback 228.6 mm (9 inches) high.

Faucet and Spout - Cast or wrought copper alloy, with top or bottom brace, with backflow preventer. Faucets shall have replaceable seat and the washer shall rotate onto the seat. Handles shall be lever type. Strainers shall have internal threads.

Drain Assembly - Plug, cup strainer, crossbars, jam nuts, washers, couplings, stopper, etc., shall be copper alloy or stainless steel.

Trap - Cast iron, minimum 7.5 cm diameter.

P-7 Shower: Shower heads, CID A-A-240 other than emergency showers, shall include a non-removable, tamperproof device to limit water flow to 0.16 liters per second (2.5 gpm) when tested in accordance with ASME A112.18.1M.

Wall Mounted: Shower head shall be nonadjustable spray, stainless steel or chromium plated brass with ball joint. Handles shall be chrome-plated die cast zinc alloy. Control valves shall be copper alloy and have metal integral parts of copper alloy, nickel alloy, or stainless steel. Valves shall be thermostatic mixing type. Shower head shall be vandalproof with integral back. Mixing value shall be memory positioning type which allows user to turn valve on and off at preferred temperature without readjusting handle position each time.

P-9 WATER COOLER DRINKING FOUNTAINS:

Water cooler drinking fountains shall: be self contained, conform to ARI 1010, use one of the fluorocarbon gases conforming to ARI 700 and ASHRAE 34 which has an Ozone Depletion Potential of less than or equal to 0.05, have a capacity to deliver 30.2 liters per hour (8 gph) of water at 10 degrees C (50 degrees F) with an inlet water temperature of 27 degrees C (80 degrees F) while residing in a room environment of 32 degrees C (90 degrees F), and have self-closing valves. Self-closing valves shall have automatic stream regulators, have a flow control capability, have a push button actuation or have a cross-shaped index metal turn handle without a hood. Exposed surfaces of stainless steel shall have No. 4 general polish finish. Spouts shall provide a flow of water at least 100 mm (4 inches) high so as to allow the insertion of a cup or glass under the flow of water.

Surface Wall-Mounted - Surface wall-mounted units shall be 336.6 mm (13-1/4 inches) wide, 330.2 mm (13 inches) deep, and have a back height of 152.4 to 203.2 mm (6 to 8 inches). The bowl shall be made of corrosion resisting steel. The unit shall have concealed fasteners and be for interior installation.

3.9.3 PLUMBING FIXTURE SCHEDULE FOR SOLDIER COMMUNITY BUILDING

P-1 WATER CLOSET ACCESSIBLE:

Siphon-jet, elongated bowl, top supply spud, ASME A112.19.2M, floor mounted. Floor flange shall be copper alloy, cast iron, or plastic. Height of top rim of bowl shall be in accordance with CABO A-1171.1.

Gasket shall be wax type.

Seat - IAPMO ANSI/IAPMO Z124.5, Type A, white plastic, elongated, open front.

Flushometer Valve - ASSE ANSI/ASSE 1037, electronically controlled, large diaphragm type with non-hold-open feature, backcheck angle control stop, and vacuum breaker. Minimum upper chamber inside diameter of not less than 66.7 mm (2-5/8 inches) at the point where the diaphragm is sealed between the upper and lower chambers. The maximum water use shall be 6 liters per flush. Provide 24V/115V transformer as required.

P-2 WHEELCHAIR LAVATORY:

Vitreous china, ASME A112.19.2M, wheelchair lavatory with wrist or elbow controls 527 mm wide x 457 mm deep (21 inches wide x 18 inches deep) with gooseneck spout. The flow shall be limited to 0.16 liters per second at a flowing water pressure of 549 kPa.

Drain - Strainer shall be copper alloy or stainless steel.

P-3 KITCHEN SINK:

Ledge back with holes for faucet and spout single bowl 609.6 x 533.4 mm x 255 mm deep (24 x 21 inches x 10 inches) deep stainless steel ASME A112.19.3M.

Faucet and Spout - Cast or wrought copper alloy. Aerator shall have internal threads. The flow shall be limited to 0.16 liters per second at a flowing water pressure of 549 kPa.

Handle - Cast copper alloy, wrought copper alloy, or stainless steel. Single lever type.

Drain Assembly - Compatible with disposer installation.

P-4 SERVICE SINK:

Enameled cast iron ASME A112.19.1M, corner, floor mounted 711.2 mm (28 inches) square, 171.5 mm (6-3/4 inches) deep.

Faucet and Spout - Cast or wrought copper alloy, with top or bottom brace, with backflow preventer. Faucets shall have replaceable seat and the washer shall rotate onto the seat. Handles shall be lever type. Strainers shall have internal threads.

Drain Assembly - Plug, cup strainer, crossbars, jam nuts, washers, couplings, stopper, etc., shall be copper alloy or stainless steel.

Trap - Cast iron, minimum 7.5 cm diameter.

P-5 LAUNDRY TRAY

Counter top 600 x 533.4 mm (24 x 21 inch, sink 340 mm (13-1/2 inches) deep, enameled cast iron ASME A112.19.1M.

Faucet and Spout - Cast or wrought copper alloy, without top or bottom brace, with backflow preventer. Faucets shall have replaceable seat and the washer shall rotate onto the seat. Strainers shall have internal

threads. Combination faucets with two valves and spouts shall be provided.

Handles - Cast or wrought copper alloy. Lever type.

P-6 WATER COOLER DRINKING FOUNTAINS (DUAL HEIGHT LEVELS)

Water cooler drinking fountains shall: be self contained, conform to ARI 1010, use one of the fluorocarbon gases conforming to ARI 700 and ASHRAE 34 which has an Ozone Depletion Potential of less than or equal to 0.05, have a capacity to deliver 30.2 liters per hour (8 gph) of water at 10 degrees C (50 degrees F) with an inlet water temperature of 27 degrees C (80 degrees F) while residing in a room environment of 32 degrees C (90 degrees F), and have self-closing valves. Self-closing valves shall have automatic stream regulators, have a flow control capability, have a push button actuation or have a cross-shaped index metal turn handle without a hood. Exposed surfaces of stainless steel shall have No. 4 general polish finish. Spouts shall provide a flow of water at least 100 mm (4 inches) high so as to allow the insertion of a cup or glass under the flow of water.

Surface Wall-Mounted - Surface wall-mounted units shall be 336.6 mm (13-1/4 inches) wide, 330.2 mm (13 inches) deep, and have a back height of 152.4 to 203.2 mm (6 to 8 inches). The bowl shall be made of corrosion resisting steel. The unit shall have concealed fasteners and be for interior installation.

Handicapped - Handicapped units shall be surface wall-mounted. The dimensions shall be 381.0 mm (15 inches) wide, 508.0 mm (20 inches) deep, with a back height of 152.4 to 203.2 mm (6 to 8 inches). The unit shall clear the floor or ground by at least 200 mm (8 inches). A clear knee space shall exist between the bottom of the bowl and the floor or ground of at least 685 mm (27 inches) and between the front edge of the bowl and the body of the unit of at least 200 mm (8 inches). A 200 mm (8 inch) wide clear space shall exist on both sides of the unit. The spout height shall be no more than 1 m (36 inches) above the floor or ground to the outlet. The spout shall be at the front of the unit and direct the water flow in a trajectory that is parallel or nearly parallel to the front of the unit. The bowl shall be 165.1 mm (6-1/2 inches) high, made of corrosion resisting steel and be for interior installation.

P-7 FOOD WASTE DISPOSER:

Food waste disposers shall be in accordance with UL 430.

P-8 DISHWASHING MACHINES

Household dishwashing machines shall conform to UL 749 and ASSE ANSI/ASSE 1006, 600 mm x 650 mm x 850 mm high (24 x 24-3/4 x 34 inch high)

3.9.4 PLUMBING FIXTURE SCHEDULE FOR REMOTE SWITCHING CENTER BUILDING

P-1 Emergency Showers

Head for Emergency and Emergency Eye and Face Wash. Shower control shall be 25 mm (1 inch) or 40 mm (1-1/2 inch) stay-open type control valve. Unit shall be corrosion-resisting steel and shall be pedestal mounted.

3.9.5 PLUMBING FIXTURE SCHEDULE FOR TRAINING FACILITY

P-1 WATER CLOSET:

Siphon-jet, elongated bowl, top supply spud, ASME A112.19.2M, floor mounted. Floor flange shall be copper alloy, cast iron, or plastic.

Gasket shall be wax type.

Seat - IAPMO ANSI/IAPMO Z124.5, Type A, white plastic, elongated, open front.

Flushometer Valve - ASSE ANSI/ASSE 1037, large diaphragm type with non-hold-open feature, backcheck angle control stop, and vacuum breaker. Minimum upper chamber inside diameter of not less than 66.7 mm (2-5/8 inches) at the point where the diaphragm is sealed between the upper and lower chambers. The maximum water use shall be 6 liters per flush.

P-2 WATER CLOSET HANDICAPPED:

Height of top rim of bowl shall be in accordance with CABO A117.1; other features are the same as P-2.

P-3 URINAL:

Wall hanging, with integral trap and extended shields, ASME A112.19.2M siphon jet. Top supply connection, back outlet.

Flushometer Valve - Similar to Flushometer Valve for P-2. The maximum water use shall be 3.8 liters per flush.

Wall hanging urinal shall be in accordance with IAPMO ANSI/IAPMO Z124.9 and be a waterless, non-flushing type, with replaceable trap insert having circular outer rim opening for flow. The replaceable trap insert shall contain a low specific gravity immiscible barrier liquid. The liquid shall be biodegradable. The urinal shall not require chair carrier. The urinal and trap assembly shall maintain a sufficient barrier of immiscible liquid necessary to inhibit backflow of sewer gases.

P-4 LAVATORY:

Manufacturer's standard sink depth, vitreous china ASME A112.19.2M, ledge back.

Faucet - Faucets shall be single type. Faucets shall have replaceable seats and washers. Valves and handles shall be copper alloy.

Handles - Four arm type. Cast, formed, or drop forged copper alloy.

Drain - Strainer shall be copper alloy or stainless steel, Pop-up drain shall include stopper, lift rods, jam nut, washer, and tail piece.

P-5 SERVICE SINK:

Enameled cast iron ASME A112.19.1M, copper alloy or stainless steel ASME A112.19.3M trap standard 609.6 mm wide x 508.0 mm deep (24 inches wide x 20 inches deep), splashback 228.6 mm (9 inches) high, splashback 228.6 mm (9 inches) high.

Faucet and Spout - Cast or wrought copper alloy, without top or bottom brace, with backflow preventer. Faucets shall have replaceable seat and the washer shall rotate onto the seat. Handles shall be four arm type.

Strainers shall have internal threads.

Drain Assembly - Plug, cup strainer, crossbars, jam nuts, washers, couplings, stopper, etc., shall be copper alloy or stainless steel.

Trap - Cast iron, minimum 7.5 cm diameter.

P-6 WATER COOLER DRINKING FOUNTAINS:

Water cooler drinking fountains shall: be self contained, conform to ARI 1010, use one of the fluorocarbon gases conforming to ARI 700 and ASHRAE 34 which has an Ozone Depletion Potential of less than or equal to 0.05, have a capacity to deliver 30.2 liters per hour (8 gph) of water at 10 degrees C (50 degrees F) with an inlet water temperature of 27 degrees C (80 degrees F) while residing in a room environment of 32 degrees C (90 degrees F), and have self-closing valves. Self-closing valves shall have automatic stream regulators, have a flow control capability, have a push button actuation or have a cross-shaped index metal turn handle without a hood. Exposed surfaces of stainless steel shall have No. 4 general polish finish. Spouts shall provide a flow of water at least 100 mm (4 inches) high so as to allow the insertion of a cup or glass under the flow of water.

Interior Free Standing - Free standing units shall be 1016 to 1054.1 mm (40 to 41-1/2 inches) high, 304.8 to 457.2 mm (12 to 18 inches) wide, and 304.8 to 355.6 mm (12 to 14 inches) deep. The bowl shall be made of corrosion resisting steel and be for interior installation.

3.9.6 PLUMBING FIXTURE SCHEDULE FOR BARRACKS BUILDING ("BK-1" and "BK-2")

P-1 WATER CLOSET:

Siphon-jet, elongated bowl, top supply spud, ASME A112.19.2M, floor mounted. Floor flange shall be copper alloy, cast iron, or plastic.

Gasket shall be wax type.

Seat - IAPMO ANSI/IAPMO Z124.5, Type A, white plastic, elongated, open front.

Flush Tank - An adequate quantity of water shall be provided to flush and clean the fixture served. The water supply to flush tanks equipped for manual flushing shall be controlled by a float valve or other automatic device designed to refill the tank after each discharge, and to completely shut off the water flow to the tank when the tank is filled to operational capacity. Water closets having their flush valve seat located below the flood level rim of the closet bowl shall have a ballcock installed within a sheath or in a separate and isolated compartment of the tank, both to have visible discharge onto the floor in case of failure. Provision shall be made to automatically supply water to the fixture so as to refill the trap seal after each flushing. The water supply to flush tanks equipped for automatic flushing shall be controlled by a suitable timing device. Ballcocks shall meet ASSE 1002.

P-2 LAVATORY:

Manufacturer's standard sink depth, enameled cast iron ASME A112.19.1M countertop, oval.

Faucet - Faucets shall be single control, mixing type. Faucets shall have

metal replaceable cartridge control unit or metal cartridge units with diaphragm which can be replaced without special tools. Valves and handles shall be copper alloy. Connection between valve and spout for center-set faucet shall be of rigid metal tubing. The flow shall be limited to 0.16 liters per second at a flowing pressure of 549 kPa.

Handles - Lever type. Cast, formed, or drop forged copper alloy.

Drain - Pop-up drain shall include stopper, lift rods, jam nut, washer, and tail piece.

P-3 BATHTUB:

Straight front, recessed, 1.524 m x 812.8 mm x 406.4 mm (60 x 32 x 16 in), enameled cast iron, ASME A112.19.1M raised bottom or porcelain enameled formed steel with structural composite reinforcement ASME A112.19.4M. Structural reinforcement shall be in accordance with IAPMO ANSI/IAPMO Z124.1 including appendix.

Drain Assembly - Plug, cup strainer, overflow assembly, washers, couplings, pop-up lever, trip lever, stopper, fittings, etc., shall be brass, cast copper alloy, or wrought copper alloy. See paragraph FIXTURES for optional plastic accessories.

P-3 Shower: Shower heads, CID A-A-240 other than emergency showers, shall include a non-removable, tamperproof device to limit water flow to 0.16 liters per second (2.5 gpm) when tested in accordance with ASME A112.18.1M.

Bath Showers: Bath showers shall include bathtub spout, shower head, valves, diverters. A shower head mounting with ball joint shall be provided. Diverter shall be integral with single mixing valves or mounted hot and cold water valves. Tub spout shall be copper alloy. Control valves shall be copper alloy and have metal integral parts of copper alloy, nickel alloy, or stainless steel. Valves shall be pressure balanced type.

P-4 KITCHEN SINK:

Ledge back with holes for faucet and spout single bowl 609.6 x 533.4 mm (24 x 21 inches) .188 mm (7-1/2 inch) deep, stainless steel ASME A112.19.3M.

Faucet and Swing Spout - Cast or wrought copper alloy. Aerator shall have internal threads. The flow shall be limited to 0.16 liters per second at a flowing water pressure of 549 kPa.

Handle - Cast copper alloy, wrought copper alloy, or stainless steel. Lever type.

Drain Assembly - Plug, cup strainer, crossbars, jam nuts, washers, couplings, stopper, etc., shall be copper alloy or stainless steel.

P-5 SERVICE SINK:

Enameled cast iron ASME A112.19.1M, copper alloy or stainless steel ASME A112.19.3M trap standard 609.6 mm wide x 508.0 mm deep (24 inches wide x 20 inches deep), splashback 228.6 mm (9 inches) high.

Faucet and Spout - Cast or wrought copper alloy, with top or bottom brace, with backflow preventer. Faucets shall have replaceable seat and the washer shall rotate onto the seat. Handles shall be lever type. Strainers

shall have internal threads.

Drain Assembly - Plug, cup strainer, crossbars, jam nuts, washers, couplings, stopper, etc., shall be copper alloy or stainless steel.

Trap - Cast iron, minimum 7.5 cm diameter.

3.9.7 PLUMBING FIXTURE SCHEDULE FOR BATTALION HEADQUARTERS BUILDING ("BN-1" and "BN-2")

P-1 WATER CLOSET:

Siphon-jet, elongated bowl, top supply spud, ASME A112.19.2M, floor mounted. Floor flange shall be copper alloy, cast iron, or plastic.

Gasket shall be wax type.

Seat - IAPMO ANSI/IAPMO Z124.5, Type A, white plastic, elongated, open front.

Flushometer Valve - ASSE ANSI/ASSE 1037, electronically controlled, large diaphragm type with non-hold-open feature, backcheck angle control stop, and vacuum breaker. Minimum upper chamber inside diameter of not less than 66.7 mm (2-5/8 inches) at the point where the diaphragm is sealed between the upper and lower chambers. The maximum water use shall be 6 liters per flush. Provide 24v/115v transformer as required.

P-1A WATER CLOSET HANDICAPPED:

Height of top rim of bowl shall be in accordance with CABO A117.1; other features are the same as P-1.

P-2 LAVATORY:

Manufacturer's standard sink depth, wall hung, 527 mm x 457 mm enameled cast iron ASME A112.19.1M ledge back.

Faucet - Faucets shall be single control, mixing type. Faucets shall have metal replaceable cartridge control unit or metal cartridge units with diaphragm which can be replaced without special tools. Valves and handles shall be copper alloy. Connection between valve and spout for center-set faucet shall be of rigid metal tubing. The flow shall be limited to 0.16 liters per second at a flowing pressure of 549 kPa.

Handles - Lever type. Cast, formed, or drop forged copper alloy.

Drain - Strainer shall be copper alloy or stainless steel.

P-2A WHEELCHAIR LAVATORY:

Vitreous china, ASME A112.19.2M, wheelchair lavatory with wrist or elbow controls 508.0 mm wide x 457 mm deep (20 inches wide x 18 inches deep) with gooseneck spout. The flow shall be limited to 0.16 liters per second at a flowing water pressure of 549 kPa.

P-3 URINAL:

Wall hanging, with integral trap and extended shields, ASME A112.19.2M washout. Top supply connection, back outlet.

Flushometer Valve - Similar to Flushometer Valve for P-1. The maximum water use shall be 3.8 liters per flush.

P-3A URINAL HANDICAPPED:

Height of top rim of bowl shall be in accordance with CABO A117.1; other features same as P-3.

Drain - Strainer shall be copper alloy or stainless steel.

P-4 WHEELCHAIR SINK:

Ledge back with holes for faucet and spout single bowl 609.6 x 533.4 mm (24 x 21 inches).138 mm (5-1/2 inch) deep stainless steel ASME A112.19.3M.

Faucet and Gooseneck Spout - Cast or wrought copper alloy. Aerator shall have internal threads. The flow shall be limited to 0.16 liters per second at a flowing water pressure of 549 kPa.

Handle - Cast copper alloy, wrought copper alloy, or stainless steel. Lever type.

Drain Assembly - Plug, cup strainer, crossbars, jam nuts, washers, couplings, stopper, etc., shall be copper alloy or stainless steel.

P-5 Shower: Shower heads, CID A-A-240 other than emergency showers, shall include a non-removable, tamperproof device to limit water flow to 0.16 liters per second (2.5 gpm) when tested in accordance with ASME A112.18.1M.

Control valves shall be copper alloy and have metal integral parts of copper alloy, nickel alloy, or stainless steel. Valves shall be pressure balanced type. Adjustable spray hand-held shower head with swivel fitting, 1524 mm minimum flexible polished, stainless steel hose and in-line vacuum breaker 635 mm grab bar with sliding spray holder that locks at any height to allow the use of the unit as either a hand-held spray or a fixed shower head. Flow shall not exceed 9.5 L/m at 549 kPa flow pressure.

P-6 SERVICE SINK:

Enameled cast iron ASME A112.19.1M, corner, floor mounted 711.2 mm (28 inches) square, 171.5 mm (6-3/4 inches) deep.

Faucet and Spout - Cast or wrought copper alloy, with top or bottom brace, with backflow preventer. Faucets shall have replaceable seat and the washer shall rotate onto the seat. Handles shall be lever type. Strainers shall have internal threads.

Drain Assembly - Plug, cup strainer, crossbars, jam nuts, washers, couplings, stopper, etc., shall be copper alloy or stainless steel.

Trap - Cast iron, minimum 7.5 cm diameter.

P-7 WATER COOLER DRINKING FOUNTAINS (DUAL HEIGHT LEVELS)

Water cooler drinking fountains shall: be self contained, conform to ARI 1010, use one of the fluorocarbon gases conforming to ARI 700 and ASHRAE 34 which has an Ozone Depletion Potential of less than or equal to 0.05, have a capacity to deliver 30.2 liters per hour (8 gph) of water at 10 degrees

C (50 degrees F) with an inlet water temperature of 27 degrees C (80 degrees F) while residing in a room environment of 32 degrees C (90 degrees F), and have self-closing valves. Self-closing valves shall have automatic stream regulators, have a flow control capability, have a push button actuation or have a cross-shaped index metal turn handle without a hood. Exposed surfaces of stainless steel shall have No. 4 general polish finish. Spouts shall provide a flow of water at least 100 mm (4 inches) high so as to allow the insertion of a cup or glass under the flow of water.

Surface Wall-Mounted - Surface wall-mounted units shall be 336.6 mm (13-1/4 inches) wide, 330.2 mm (13 inches) deep, and have a back height of 152.4 to 203.2 mm (6 to 8 inches). The bowl shall be made of stainless steel. The unit shall have concealed fasteners and be for interior installation.

Handicapped - Handicapped units shall be surface wall-mounted. The dimensions shall be 381.0 mm (15 inches) wide, 508.0 mm (20 inches) deep, with a back height of 152.4 to 203.2 mm (6 to 8 inches). The unit shall clear the floor or ground by at least 200 mm (8 inches). A clear knee space shall exist between the bottom of the bowl and the floor or ground of at least 685 mm (27 inches) and between the front edge of the bowl and the body of the unit of at least 200 mm (8 inches). A 200 mm (8 inch) wide clear space shall exist on both sides of the unit. The spout height shall be no more than 1 m (36 inches) above the floor or ground to the outlet. The spout shall be at the front of the unit and direct the water flow in a trajectory that is parallel or nearly parallel to the front of the unit. The bowl shall be 165.1 mm (6-1/2 inches) high, made of stainless steel and be for interior installation.

3.9.8 Plumbing Fixture Schedule for Dining Facility (DN-1)

P-1 WATER CLOSET:

Siphon-jet, elongated bowl, top supply spud, ASME A112.19.2M, wall mounted. Flush volume shall be no more than 6 liters of water per flush.

Gasket shall be wax type.

Seat - CID A-A-238, Type A, white plastic, elongated, open front.

Flushometer Valve - ASSE 1037, large diaphragm type with non-hold-open feature, backcheck angle control stop, and vacuum breaker. Minimum upper chamber inside diameter of not less than 66.7 mm (2-5/8 inches) at the point where the diaphragm is sealed between the upper and lower chambers. The maximum water use shall be 6 liters per flush.

P-2 WATER CLOSET HANDICAPPED:

Top rim of bowl shall be 457 mm (18 inches) above the floor; other features are the same as P-1.

P-3 URINAL:

Wall hanging, with integral trap and extended shields, ASME A112.19.2M washout. Top supply connection, back outlet.

Flushometer Valve - Similar to Flushometer Valve for P-1. The maximum water use shall be 3.8 liters per flush.

P-4 LAVATORY, COUNTERTOP TYPE, PATRON TOILETS:

Manufacturer's standard sink depth, corian, see toilet countertop drawings.

Faucet - Faucets shall be single type. Faucets shall have metal replaceable cartridge control unit or metal cartridge units with diaphragm which can be replaced without special tools. Valves and handles shall be copper alloy. The flow shall be limited to 0.16 liters per second at a flowing pressure of 549 kPa.

Handles - Lever type. Cast, formed, or drop forged copper alloy.

Drain - Strainer shall be copper alloy or stainless steel.

P-5 LAVATORY, COUNTERTOP TYPE, EMPLOYEE TOILETS

Manufacturer's standard sink depth, corian, see toilet countertop drawings.

Faucet - Faucets shall be center set, single control, mixing type. Faucets shall have metal replaceable cartridge control unit or metal cartridge units with diaphragm which can be replaced without special tools. Valves and handles shall be copper alloy. The flow shall be limited to 0.16 liters per second at a flowing pressure of 549 kPa.

Handles - Lever type. Cast, formed, or drop forged copper alloy.

Drain - Strainer shall be copper alloy or stainless steel.

P-6 LAVATORY; COUNTERTOP TYPE, HANDICAPPED; PATRON TOILETS

Same as P-4 above, except finished with 100 mm long blade type, wrist control handles and gooseneck spout.

P-7 LAVATORY, COUNTERTOP TYPE, HANDICAPPED; EMPLOYEE TOILETS

Same as P-5 above, except faucet shall be centerset, mixing type and furnished with 100 mm long blade type, wrist control handles and gooseneck spout.

P-8 SERVICE SINK:

Stainless steel ASME A112.19.3M floor mounted 838.2 mm (33 inches) wide, 254 mm (10 inches) deep.

Faucet and Spout - Cast or wrought copper alloy, with top or bottom brace, with backflow preventer. Faucets shall have replaceable seat and the washer shall rotate onto the seat. Handles shall be lever type. Strainers shall have internal threads.

Drain Assembly - Plug, cup strainer, crossbars, jam nuts, washers, couplings, stopper, etc. shall be copper alloy or stainless steel.

Trap - Cast iron.

P-9 HAND SINK:

Manufacturer's standard sink depth, stainless steel, splash back, with wrist control handles and goose neck spout. Flow shall be limited to 0.16 liters per second. Overall size: 432 mm wide x 381 mm front to back (17 by 15 inches).

Drain - Strainer shall be stainless steel

P-10 WATER COOLER DRINKING FOUNTAINS: Water cooler drinking fountains shall: be self contained, conform to ARI 1010, use one of the fluorocarbon gases conforming to ARI 700 and ASHRAE 34 which has an Ozone Depletion Potential of less than or equal to 0.05, have a capacity to deliver 30.2 liters per hour (8 gph) of water at 10 degrees C (50 degrees F) with an inlet water temperature of 27 degrees C (80 degrees F) while residing in a room environment of 32 degrees C (90 degrees F), and have self-closing valves. Self-closing valves shall have automatic stream regulators, have a flow control capability, have a push button actuation or have a cross-shaped index metal turn handle without a hood. Exposed surfaces of stainless steel shall have No. 4 general polish finish. Spouts shall provide a flow of water at least 100 mm (4 inches) high so as to allow the insertion of a cup or glass under the flow of water.

Handicapped - Handicapped units shall be surface wall-mounted. The dimensions shall be 381.0 mm (15 inches) wide, 508.0 mm (20 inches) deep, with a back height of 152.4 to 203.2 mm (6 to 8 inches). A clear knee space shall exist between the bottom of the bowl and the floor or ground of at least 685 mm (27 inches) and between the front edge of the bowl and the body of the unit of at least 200 mm (8 inches). A 200 mm (8 inch) wide clear space shall exist on both sides of the unit. The spout height shall be no more than 1 m (36 inches) above the floor or ground to the outlet. The spout shall be at the front of the unit and direct the water flow in a trajectory that is parallel or nearly parallel to the front of the unit. The bowl shall be 165.1 mm (6-1/2 inches) high, made of corrosion resisting steel and be for interior installation.

P-11 WASHDOWN STATION

Cast or wrought copper alloy faucet and spout. Furnish with backflow preventer. Faucets shall have replaceable sent. Furnish with 15.2 meter long, high pressure, high temperature hose and nozzle.

3.9.9 Plumbing Fixture Schedule For Central Plant Building

P-1 Emergency Showers

Emergency and Emergency Eye and Face Wash. Shower control shall be 25 mm or 40 mm stay-open type control valve and thermal purge valve. Unit shall be corrosion-resisting steel and shall be pedestal mounted.

3.10 POSTED INSTRUCTIONS

Framed instructions under glass or in laminated plastic, including wiring and control diagrams showing the complete layout of the entire system, shall be posted where directed. Condensed operating instructions explaining preventive maintenance procedures, methods of checking the system for normal safe operation, and procedures for safely starting and stopping the system shall be prepared in typed form, framed as specified above for the wiring and control diagrams and posted beside the diagrams. The framed instructions shall be posted before acceptance testing of the systems.

3.11 PERFORMANCE OF WATER HEATING EQUIPMENT

Standard rating condition terms are as follows:

EF = Energy factor, overall efficiency.

ET = Thermal efficiency with 21 degrees C delta T.

EC = Combustion efficiency, 100 percent - flue loss when smoke = o (trace is permitted).

SL = Standby loss in W/0.093 sq. m. based on 27 degrees C delta T, or in percent per hour based on nominal 38 degrees C delta T.

HL = Heat loss of tank surface area.

V = Storage volume in liters

3.11.1 Storage Water Heaters

3.11.1.1 Electric

a. Storage capacity of 454 liters or less, and input rating of 12 kW or less: minimum energy factor (EF) shall be 0.95-0.00132V per 10 CFR 430.

b. Storage capacity of more than 454 liters or input rating more than 12 kW: maximum SL shall be 1.9 w/0.093 sq. m. per ASHRAE 90.1, Addenda B.

3.11.1.2 Gas

a. Storage capacity of 379 liters or less, and input rating of 21980 W or less: minimum EF shall be 0.62-0.0019V per 10 CFR 430.

b. Storage capacity of more than 379 liters - or input rating more than 21980 W: Et shall be 77 percent; maximum SL shall be 1.3+38/V, per ANSI Z21.10.3.

3.11.2 Unfired Hot Water Storage

Volumes and inputs: maximum HL shall be 20.5 W/sq. meter.

3.12 FOOD SERVICE EQUPMENT FOR DINING FACILITY DN-1

For the Dining Facility, the contractor shall be required to coordinate the plumbing requirements for food service equipment listed in Section 11400 FOOD SERVICE EQUPIMENT with the equipment suppliers. All required plumbing connections for food service equipment shall be clearly indicated in the Plumbing System detailed drawing required under paragraph 1.5, "Submittals, SD-04 Drawings".

3.13 TABLES

TABLE I
PIPE AND FITTING MATERIALS FOR
DRAINAGE, WASTE, AND VENT PIPING SYSTEMS

		SERVICE					
Item #	Pipe and Fitting Materials	A	B	C	D	E	F
1	Cast iron soil pipe and fittings, hub and spigot, ASTM A 74 with compression gaskets	X	X	X	X	X	
2	Cast iron soil pipe and fittings hubless, CISPI 301 and ASTM A 888		X		X		
3	Cast iron drainage fittings, threaded, ASME B16.12 for use with Item 6				X		
4	Cast iron screwed fittings (threaded) ASME B16.4 for use with Item 6				X	X	
5	Malleable-iron threaded fittings, galvanized ASME B16.3 for use with Item 6				X	X	
6	Steel pipe, seamless galvanized, ASTM A 53, Type S, Grade B				X	X	
7	Stainless steel pipe, and threaded fittings, Grade TP304 Schedule 105 conforming to ASME B36.19M.						X

SERVICE:

A - Underground Building Soil, Waste and Storm Drain
B - Aboveground Soil, Waste, Drain In Buildings
C - Underground Vent
D - Aboveground Vent
E - Interior Rainwater Conductors Aboveground
F - Food Service Equipment Drains
* - Hard Temper

TABLE II
PIPE AND FITTING MATERIALS FOR PRESSURE PIPING SYSTEMS

		SERVICE			
Item No.	Pipe and Fitting Materials	A	B	C	D
1	Seamless copper water tube, ASTM B 88, ASTM B 88M	X**	X**	X**	X***
2	Seamless and welded copper distribution tube (Type D) ASTM B 641	X**	X**	X**	X****
3	Cast copper alloy solder-joint pressure fittings, ASME B16.18 for use with Items 1 and 2	X	X	X	X
4	Fittings: brass or bronze; ASME B16.15, and ASME B16.18 ASTM B 828	X	X		
5	Carbon steel pipe unions, socket-welding and threaded, MSS SP-83	X	X	X	
6	Malleable-iron threaded pipe unions ASME B16.39	X	X		
7	Nipples, pipe threaded ASTM A 733	X	X	X	

A - Cold Water Aboveground
B - Hot Water 82 degree C Maximum Aboveground
C - Compressed Air Lubricated
D - Cold Water Service Belowground
Indicated types are minimum wall thicknesses.
** - Type L - Hard
*** - Type K - Hard temper with brazed joints only or type K-soft temper without joints in or under floors
**** - In or under slab floors only brazed joints

TABLE III
STANDARD RATING CONDITIONS AND MINIMUM PERFORMANCE RATINGS FOR WATER HEATING EQUIPMENT

A. STORAGE WATER HEATERS

FUEL	STORAGE CAPACITY LITERS	INPUT RATING	TEST PROCEDURE	REQUIRED PERFORMANCE
Elect.	454 max.	12 KO max.	10 CFR 430	EF = 0.95-0.00132V minimum
Elect.	454 min. OR	12 kW min.	ASHRAE 90.1 (Addenda B)	SL = 1.9 W/0.09 sq. m. maximum
Gas	380 max.	22 kW max.	10 CFR 430	EF = 0.62-0.0019V minimum
Gas	380 min. OR	22 kW min.	ANSI Z21.10.3	ET= 77 percent; SL = 1.3+38/V max.

B. Unfired Hot Water Storage.

Volumes and inputs: maximum HL shall be 20.5 W/sq. meter

TERMS:

EF = Energy factor, overall efficiency.
ET = Thermal efficiency with 21 degrees C delta T.
EC = Combustion efficiency, 100 percent - flue loss when smoke = 0 (trace is permitted).
SL = Standby loss in W/0.09 sq. m. based on 27 degrees C delta T, or in percent per hour based on nominal 32 degrees C delta T.
HL = Heat loss of tank surface area
V = Storage volume in gallons

-- End of Section --

SECTION TABLE OF CONTENTS

DIVISION 15 - MECHANICAL

SECTION 15650

CENTRAL REFRIGERATED AIR-CONDITIONING SYSTEM

PART 1 GENERAL

1.1 REFERENCES
1.2 SYSTEM DESCRIPTION
1.3 SUBMITTALS
1.4 QUALIFICATIONS
1.5 SAFETY REQUIREMENTS
1.6 DELIVERY, STORAGE, AND HANDLING
1.7 PROJECT/SITE CONDITIONS
1.7.1 Verification of Dimensions
1.7.2 Drawings
1.8 MANUFACTURER'S MULTI-YEAR COMPRESSOR WARRANTY
1.8.1 Equipment Warranty Tags and Guarantor's Local Representative

PART 2 PRODUCTS

2.1 STANDARD COMMERCIAL PRODUCTS
2.2 NAMEPLATES
2.3 ELECTRICAL WORK
2.4 SELF-CONTAINED WATER COOLED CENTRIFUGUAL LIQUID CHILLER
2.4.1 Centrifugal Type
2.5 HEAT RECOVERY CHLLER
2.6 CHILLER COMPONENTS
2.6.1 Refrigerant and Oil
2.6.2 Structural Base
2.6.3 Chiller Refrigerant Circuit
2.6.4 Controls Package
2.6.4.1 Operating Controls
2.6.4.2 Monitoring Capabilities
2.6.4.3 Programmable Setpoints
2.6.4.4 Safety Controls with Manual Reset
2.6.4.5 Safety Controls with Automatic Reset
2.6.4.6 Remote Alarm
2.6.4.7 Energy Management Control System (EMCS) Interface
2.6.5 Compressor(s)
2.6.5.1 Reciprocating Compressor(s)
2.6.5.2 Scroll Compressor(s)
2.6.5.3 Rotary Screw Compressor(s)
2.6.5.4 Centrifugal Compressor(s)
2.6.6 Compressor Driver, Electric Motor
2.6.7 Compressor Driver Connections
2.6.8 Liquid Cooler (Evaporator)
2.6.9 Water-Cooled Condenser Coil
2.6.10 Receivers
2.6.11 Chiller Purge System
2.6.12 Tools

2.6.13 CHILLER VARIABLE FREQUENCY
2.7 ACCESSORIES
2.7.1 Pumps
2.7.1.1 Construction
2.7.1.2 Mechanical Shaft Seals
2.7.1.3 Pump Variable Speed Drives
2.7.2 Expansion Tanks
2.7.3 Air Separator Tanks
2.7.4 Refrigerant Leak Detector
2.7.5 Refrigerant Relief Valve/Rupture Disc Assembly
2.7.6 Refrigerant Signs
2.7.6.1 Installation Identification
2.7.6.2 Controls and Piping Identification
2.7.7 Refrigerant Recovery/Recycle System
2.7.8 Field Installed Insulation
2.7.9 Gaskets
2.7.10 Bolts and Nuts
2.8 COOLING TOWER
2.8.1 Fire Safety
2.8.2 Fiberglass Reinforced Plastic (FRP)
2.8.3 Zinc-Coated Steel
2.8.4 Polyvinyl Chloride (PVC) Formed Sheets
2.8.5 Hardware
2.8.6 Noise Control
2.8.7 Conventional Type Tower
2.8.7.1 Casing
2.8.7.2 Cold-Water Basin
2.8.7.3 Hot-Water Distribution
2.8.7.4 Fill Material
2.8.7.5 Drift Eliminator
2.8.7.6 Fan Cylinder
2.8.7.7 Framework and Equipment Supports
2.8.7.8 Structural Supports
2.8.7.9 Foundations
2.8.8 Louvers
2.8.9 Fans
2.8.10 Speed Reducer Gears and Drive Shaft
2.8.11 Fan Motor
2.8.11.1 Cooling Tower Variable Frequency Drive
2.8.12 Stairways and Ladders
2.8.13 Handrailings
2.8.14 Access Doors
2.9 WATER TREATMENT SYSTEMS
2.9.1 Water Analysis
2.9.2 Chilled and Condenser Water
2.9.3 Water Treatment Services
2.9.4 Chilled Water System
2.9.5 Condenser Water
2.9.5.1 Chemical Feed Pump
2.9.5.2 Tanks
2.9.5.3 Injection Assembly
2.9.5.4 Water Meter
2.9.5.5 Timers
2.9.5.6 Water Treatment Control Panel
2.9.5.7 Chemical Piping
2.9.5.8 Sequence of Operation
2.9.5.9 Test Kits
2.9.5.10 Bleed Line
2.10 PIPING COMPONENTS

2.10.1 Water Piping and Fittings
2.10.1.1 Steel Pipe
2.10.1.2 Steel Pipe Joints and Fittings
2.10.1.3 Copper Tube
2.10.1.4 Copper Tube Joints and Fittings
2.10.2 Water Piping Valves and Accessories
2.10.2.1 Gate Valves
2.10.2.2 Globe and Angle Valves
2.10.2.3 Check Valves
2.10.2.4 Butterfly Valves
2.10.2.5 Plug Valves
2.10.2.6 Ball Valves
2.10.2.7 Calibrated Balancing Valves
2.10.2.8 Automatic Flow Control Valves
2.10.2.9 Air Vents
2.10.2.10 Strainers
2.10.2.11 Combination Strainer and Suction Diffuser
2.10.2.12 Pump Discharge Valves
2.10.2.13 Flexible Pipe Connectors
2.10.2.14 Pressure Gauges
2.10.2.15 Thermometers
2.10.2.16 Pipe Nipples
2.10.2.17 Pipe Unions
2.10.2.18 Solder
2.10.3 Expansion Joints
2.10.3.1 Slip-Tube Joints
2.10.3.2 Flexible Ball Joints
2.10.3.3 Bellows Type Joints
2.10.4 Escutcheons
2.10.5 Pipe Hangers, Inserts, and Supports
2.11 FABRICATION
2.11.1 Factory Coating
2.11.2 Field Painting
2.11.2.1 Color Coding
2.12 FACTORY TESTS
2.12.1 Chiller Performance Test
2.12.2 Chiller Sound Test
2.13 SUPPLEMENTAL COMPONENTS/SERVICES
2.13.1 Drain and Makeup Water Piping

PART 3 EXECUTION

3.1 INSTALLATION
3.1.1 Refrigeration System
3.1.1.1 Equipment
3.1.1.2 Refrigerant Charging
3.1.1.3 Oil Charging
3.1.1.4 Automatic Controls
3.1.2 General Piping Installation
3.1.2.1 Brazed Joints
3.1.2.2 Threaded Joints
3.1.2.3 Welded Joints
3.1.2.4 Flanged Joints
3.1.2.5 Flared Connections
3.1.2.6 Thermometers
3.1.2.7 Supports
3.1.2.8 Pipe Hangers, Inserts, and Supports
3.1.2.9 Pipe Alignment Guides
3.1.2.10 Anchors

3.1.2.11 Pipe Sleeves
3.1.2.12 Escutcheons
3.1.2.13 Access Panels
3.1.3 Water Piping
3.1.3.1 Directional Changes
3.1.3.2 Functional Requirements
3.1.3.3 Valves
3.1.3.4 Air Vents
3.1.3.5 Drains
3.1.3.6 Flexible Pipe Connectors
3.1.3.7 Flanges and Unions
3.1.3.8 Grooved Mechanical Joints
3.1.4 Mechanical Room Ventilation
3.1.5 Field Applied Insulation
3.1.6 Factory Applied Insulation
3.1.6.1 Refrigerant Suction Lines
3.1.6.2 Liquid Coolers
3.2 TESTS
3.2.1 Field Tests
3.2.1.1 Water Pipe Testing
3.2.1.2 Test of Backflow Prevention Assemblies
3.2.1.3 Cooling Tower Tests
3.2.2 System Performance Tests
3.2.3 Condenser Water Quality Tests
3.3 INSPECTIONS
3.4 MANUFACTURER'S FIELD SERVICE
3.5 CLEANING AND ADJUSTING
3.5.1 Piping
3.5.2 Equipment
3.6 DEMONSTRATIONS

-- End of Section Table of Contents --

SECTION 15650

CENTRAL REFRIGERATED AIR-CONDITIONING SYSTEM

PART 1 GENERAL

1.1 REFERENCES

The publications listed below form a part of this specification to the extent referenced. The publications are referred to in the text by basic designation only.

AIR CONDITIONING AND REFRIGERATION INSTITUTE (ARI)

ARI 495	(1999) Refrigerant Liquid Receivers
ARI 550	(1992) Centrifugal or Rotary Screw Water-Chilling Packages
ARI 575	(1994) Method of Measuring Machinery Sound Within an Equipment Space
ARI 700	(1995; Apx C) Specifications for Fluorocarbon and Other Refrigerants
ARI 740	(1998) Refrigerant Recovery/Recycling Equipment

AMERICAN BEARING MANUFACTURERS ASSOCIATION (AFBMA)

AFBMA Std 9	(1990) Load Ratings and Fatigue Life for Ball Bearings
AFBMA Std 11	(1990) Load Ratings and Fatigue Life for Roller Bearings

AMERICAN NATIONAL STANDARDS INSTITUTE (ANSI)

ANSI S1.13	(1995) Methods for the Measurement of Sound Pressure Levels

AMERICAN SOCIETY FOR TESTING AND MATERIALS (ASTM)

ASTM A 47	(1990; R 1995) Ferritic Malleable Iron Castings
ASTM A 47M	(1999) Ferritic Malleable Iron Castings (Metric)
ASTM A 53	(1999b) Pipe, Steel, Black and Hot-Dipped, Zinc-Coated, Welded and Seamless
ASTM A 106	(1999el) Seamless Carbon Steel Pipe for High-Temperature Service

ASTM A 123/A 123M	(1997ael) Zinc (Hot-Dip Galvanized) Coatings on Iron and Steel Products
ASTM A 153/A 153M	(1998) Zinc Coating (Hot-Dip) on Iron and Steel Hardware
ASTM A 181/A181M	(1995b) Carbon Steel Forgings for General-Purpose Piping
ASTM A 183	(1983; R 1998) Carbon Steel Track Bolts and Nuts
ASTM A 193/A 193M	(1999) Alloy-Steel and Stainless Steel Bolting Materials for High-Temperature Service
ASTM A 234/A 234M	(1999) Piping Fittings of Wrought Carbon Steel and Alloy Steel for Moderate and High Temperature Service
ASTM A 307	(1997) Carbon Steel Bolts and Studs, 60 000 PSI Tensile Strength
ASTM A 536	(1999el) Ductile Iron Castings
ASTM A 733	(1999) Welded and Seamless Carbon Steel and Austenitic Stainless Steel Pipe Nipples
ASTM B 32	(1996) Solder Metal
ASTM B 62	(1993) Composition Bronze or Ounce Metal Castings
ASTM B 75	(1997) Seamless Copper Tube
ASTM B 75M	(1997) Seamless Copper Tube (Metric)
ASTM B 88	(1996) Seamless Copper Water Tube
ASTM B 88M	(1996) Seamless Copper Water Tube (Metric)
ASTM B 117	(1997) Operating Salt Spray (Fog) Apparatus
ASTM B 650	(1995) Electrodeposited Engineering Chromium Coatings on Ferrous Substrates
ASTM B 813	(1993) Liquid and Paste Fluxes for Soldering Applications of Copper and Copper Alloy Tube
ASTM C 534	(1999) Preformed Flexible Elastomeric Cellular Thermal Insulation in Sheet and Tubular Form
ASTM D 520	(1984; R 1995el) Zinc Dust Pigment
ASTM D 596	(1991; R 1995) Reporting Results of Analysis of Water

ASTM D 1784	(1999a) Rigid Poly(Vinyl Chloride) (PVC) Compounds and Chlorinated Poly(Vinyl Chloride) (CPVC) Compounds
ASTM D 2000	(1999) Rubber Products in Automotive Applications
ASTM D 3308	(1997) PTFE Resin Skived Tape
ASTM E 84	(1999) Surface Burning Characteristics of Building Materials
ASTM F 104	(1995) Nonmetallic Gasket Materials
ASTM F 1199	(1988; R 1998) Cast (All Temperature and Pressures) and Welded Pipe Line Strainers (150 psig and 150 degrees F Maximum)

AMERICAN SOCIETY OF HEATING, REFRIGERATING AND AIR-CONDITIONING ENGINEERS (ASHRAE)

ASHRAE 15	(1994) Safety Code for Mechanical Refrigeration
ASHRAE 34	(1997) Number Designation and Safety Classification of Refrigerants

ASME INTERNATIONAL (ASME)

ASME B1.20.1	(1983; R 1992) Pipe Threads, General Purpose (Inch)
ASME B16.5	(1996; B16.5a) Pipe Flanges and Flanged Fittings NPS 1/2 thru NPS 24
ASME B16.9	(1993) Factory-Made Wrought Steel Buttwelding Fittings
ASME B16.11	(1996) Forged Fittings, Socket-Welding and Threaded
ASME B16.18	(1984; R 1994) Cast Copper Alloy Solder Joint Pressure Fittings
ASME B16.21	(1992) Nonmetallic Flat Gaskets for Pipe Flanges
ASME B16.22	(1995; B16.22a1998) Wrought Copper and Copper Alloy Solder Joint Pressure Fittings
ASME B16.26	(1988) Cast Copper Alloy Fittings for Flared Copper Tubes
ASME B16.39	(1998) Malleable Iron Threaded Pipe Unions Classes 150, 250, and 300
ASME B31.1	(1998) Power Piping

ASME B31.5	(1992; B31.5a1994) Refrigeration Piping
ASME B40.1	(1991) Gauges - Pressure Indicating Dial Type - Elastic Element
ASME BPV VIII Div 1	(1998) Boiler and Pressure Vessel Code; Section VIII, Pressure Vessels Division 1 - Basic Coverage
ASME BPV IX	(1998) Boiler and Pressure Vessel Code; Section IX, Welding and Brazing Qualifications
ASME PTC 23	(1986; Addenda 1992, R 1997) Atmospheric Water Cooling Equipment

AMERICAN WATER WORKS ASSOCIATION (AWWA)

AWWA C606	(1997) Grooved and Shouldered Joints

AMERICAN WELDING SOCIETY (AWS)

AWS D1.1	(1998) Structural Welding Code - Steel

COOLING TOWER INSTITUTE (CTI)

CTI ATC-105	(1997) Acceptance Test Code
CTI Std-111	(1998) Gear Speed Reducers
CTI Std-137	(1994) Fiberglass Pultruded Structural Products for Use in Cooling Towers

EXPANSION JOINT MANUFACTURERS ASSOCIATION (EJMA)

EJMA Stds	(1998; 7th Edition) EJMA Standards

HYDRAULIC INSTITUTE (HI)

HI 1.1-1.5	(1994) Centrifugal Pumps

MANUFACTURERS STANDARDIZATION SOCIETY OF THE VALVE AND FITTINGS INDUSTRY (MSS)

MSS SP-25	(1998) Standard Marking System for Valves, Fittings, Flanges and Unions
MSS SP-58	(1993) Pipe Hangers and Supports - Materials, Design and Manufacture
MSS SP-67	(1995) Butterfly Valves
MSS SP-69	(1996) Pipe Hangers and Supports - Selection and Application
MSS SP-70	(1998) Cast Iron Gate Valves, Flanged and Threaded Ends

MSS SP-71	(1997) Gray Iron Swing Check Valves, Flanges and Threaded Ends
MSS SP-72	(1992) Ball Valves with Flanged or Butt-Welding Ends for General Service
MSS SP-78	(1998) Cast Iron Plug Valves, Flanged and Threaded Ends
MSS SP-80	(1997) Bronze Gate, Globe, Angle and Check Valves
MSS SP-85	(1994) Cast Iron Globe & Angle Valves, Flanged and Threaded Ends
MSS SP-110	(1996) Ball Valves Threaded, Socket-Welding, Solder Joint, Grooved and Flared Ends

NATIONAL ELECTRICAL MANUFACTURERS ASSOCIATION (NEMA)

NEMA 250	(1997) Enclosures for Electrical Equipment (1000 Volts Maximum)
NEMA ICS 1	(1993) Industrial Controls and Systems
NEMA ICS 2	(1993) Industrial Control and Systems Controllers, Contactors, and Overload Relays Rated Not More Than 2,000 Volts AC or 750 Volts DC
NEMA MG 1	(1998) Motors and Generators

NATIONAL FIRE PROTECTION ASSOCIATION (NFPA)

NFPA 90A	(1996) Installation of Air Conditioning and Ventilating Systems
NFPA 214	(1996) Water-Cooling Towers
NFPA 255	(1996) Method of Test of Surface Burning Characteristics of Building Materials

1.2 SYSTEM DESCRIPTION

This specification section covers the provisions and installation procedures necessary for a complete and totally functional central refrigerated air-conditioning system as defined herein.

1.3 SUBMITTALS

Government approval is required for submittals with a "GA" designation; submittals having an "FIO" designation are for information only. The following shall be submitted in accordance with Section 01330 SUBMITTAL PROCEDURES:

SD-01 Data

Central Refrigerated Air-Conditioning System; FIO.

Manufacturer's catalog data, at least 5 weeks prior to ordering the equipment, shall be highlighted to show model No., size, options, performance charts and curves, etc. in adequate detail to demonstrate compliance with contract requirements. Data shall include manufacturer's recommended installation instructions and procedures. Data shall be adequate to demonstrate compliance with contract requirements as specified within the paragraphs:

a. Refrigeration System
b. System Components
c. Accessories
d. Cooling Tower
e. Piping Components

If vibration isolation is specified for a unit, vibration isolator literature shall be included containing catalog cuts and certification that the isolation characteristics of the isolators provided meet the manufacturer's recommendations.

Water Treatment Systems; FIO.

Six complete copies, at least 5 weeks prior to the purchase of the water treatment system, of the proposed water treatment plan including a layout, control scheme, a list of existing make-up water conditions including the items listed in Paragraph Water Analysis, a list of chemicals, the proportion of chemicals to be added, the final treated water conditions, and a description of environmental concerns for handling the chemicals.

Spare Parts; FIO.

Spare parts data for each different item of material and equipment specified, after approval of the detail drawings and not later than 1 month prior to the date of beneficial occupancy. The data shall include a complete list of parts and supplies, with source of supply.

Qualifications; FIO.

Six copies of qualified procedures, and list of names and identification symbols of qualified welders and welding operators, prior to non-factory welding operations.

SD-04 Drawings

Central Refrigerated Air-Conditioning System; FIO.

Drawings, at least 5 weeks prior to beginning construction, shall provide adequate detail to demonstrate compliance with contract requirements. Drawings shall consist of:

a. Equipment layouts which identify assembly and installation details.

b. Piping layouts which identify all valves and fittings.

c. Plans and elevations which identify clearances required for maintenance and operation.

d. Wiring diagrams which identify each component individually and all interconnected or interlocked relationships between components.

e. Foundation drawings, bolt-setting information, and foundation bolts prior to concrete foundation construction for all equipment indicated or required to have concrete foundations.

f. Details, if piping and equipment are to be supported other than as indicated, which include loadings and type of frames, brackets, stanchions, or other supports.

g. Shop drawings detailing the layout dimensions, structural uneven sizes and welding connections for the field erected structural support for the cooling tower if required, stamped by the lincensed Structural Engineer.

SD-06 Instructions

Posted Instructions; FIO.

Posted instructions, at least 2 weeks prior to construction completion, shall include equipment layout, wiring and control diagrams, piping, valves and control sequences, and typed condensed operation instructions. The condensed operation instructions shall include preventative maintenance procedures, methods of checking the system for normal and safe operation, and procedures for safely starting and stopping the system. The posted instructions shall be framed under glass or laminated plastic and be posted where indicated by the Contracting Officer.

SD-07 Schedules

Factory Tests; FIO.

Schedules, at least 2 weeks prior to the factory test, which identify the date, time, and location for each test. Schedules shall be submitted for both the Chiller Performance Test and the Chiller Sound Test. The Chiller Performance Test schedule shall also allow the witnessing of the test by a Government Representative.

Tests; FIO.

Test schedules, at least 2 weeks prior to the start of related testing, for each of the field tests, the system performance tests, and the condenser water quality tests. The schedules shall identify the date, time, and location for each test.

Demonstrations; FIO.

A schedule, at least 2 weeks prior to the date of the proposed training course, which identifies the date, time, and location for the training.

SD-08 Statements

Verification of Dimensions; FIO.

A letter, at least 2 weeks prior to beginning construction, including the date the site was visited, conformation of existing conditions, and any discrepancies found.

SD-09 Reports

Factory Tests; FIO.

Six copies of the report shall be provided in bound 216 x 279 mm (8 1/2 x 11 inch) booklets. Reports shall certify the compliance with performance requirements and follow the format of the required testing standard for both the Chiller Performance Tests and the Chiller Sound Tests. Test report shall include certified calibration report of all test instrumentation. Calibration report shall include certification that all test instrumentation has been calibrated within 6 months prior to the test date, identification of all instrumentation, and certification that all instrumentation complies with requirements of the test standard. Test report shall be submitted 2 weeks after completion of the factory test.

Field Tests; FIO.

Six copies of the report shall be provided in bound 216 x 279 mm (8 1/2 x 11 inch) booklets. Reports shall document all phases of tests performed during the Water Pipe Testing, the Refrigerant Pipe Testing, and the Cooling Tower Tests. The report shall include initial test summaries, all repairs/adjustments made, and the final test results.

System Performance Tests; FIO.

Six copies of the report shall be provided in bound 216 x 279 (8 1/2 x 11 inch) booklets. The report shall document compliance with the specified performance criteria upon completion and testing of the system. The report shall indicate the number of days covered by the tests and any conclusions as to the adequacy of the system. The report shall also include the following information and shall be taken at least three different times at outside dry-bulb temperatures that are at least 3 degrees C (5 degrees F) apart:

a. Date and outside weather conditions.
b. The load on the system based on the following:

(1) The refrigerant used in the system.

(2) Condensing temperature and pressure.

(3) Suction temperature and pressure.

(4) Running current, voltage and proper phase sequence for each phase of all motors.

(5) The actual on-site setting of all operating and safety controls.

(6) Chilled water pressure, flow and temperature in and out of the chiller.

(7) The position of the capacity-reduction gear at machine off, one-third loaded, one-half loaded, two-thirds loaded, and fully loaded.

Condenser Water Quality Tests; FIO.

Test reports, each month for a period of one year after project completion, in bound 216 x 279 (8 1/2 x 11 inch) booklets. The reports shall

identifying the chemical composition of the condenser water. The reports shall also include a comparison of the manufacturer's recommended operating conditions for the cooling tower and condenser in relation to the condition of the condenser water. Any required corrective action shall be documented within the report.

Inspections; FIO.

Six copies of an inspection report, at the completion of one year of service, in bound 216 x 279 (81/2 x 11 inch) inch booklets. The report shall identifying the condition of each cooling tower and condenser. The report shall also include a comparison of the condition of the cooling tower and condenser with the manufacturer's recommended operating conditions. The report shall identify all actions taken by the Contractor and manufacturer to correct deficiencies during the first year of service.

SD-13 Certificates

Central Refrigerated Air-Conditioning System; FIO.

Where the system, components, or equipment are specified to comply with requirements of AGA, NFPA, ARI, ASHRAE, ASME, or UL, 1 copy of proof of such compliance shall be provided. The label or listing of the specified agency shall be acceptable evidence. In lieu of the label or listing, a written certificate from an approved, nationally recognized testing organization equipped to perform such services, stating that the items have been tested and conform to the requirements and testing methods of the specified agency may be submitted. When performance requirements of this project's drawings and specifications vary from standard ARI rating conditions, computer printouts, catalog, or other application data certified by ARI or a nationally recognized laboratory as described above shall be included. If ARI does not have a current certification program that encompasses such application data, the manufacturer may self certify that his application data complies with project performance requirements in accordance with the specified test standards.

SD-19 Operation and Maintenance Manuals

Operation Manual; FIO.

Six complete copies of an operation manual in bound 216 x 279 (81/2 x 11 inch) booklets listing step-by-step procedures required for system startup, operation, abnormal shutdown, emergency shutdown, and normal shutdown at least 2 weeks prior to the first training course. The booklets shall include the manufacturer's name, model number, and parts list. The manuals shall include the manufacturer's name, model number, service manual, and a brief description of all equipment and their basic operating features.

Maintenance Manual; FIO.

Six complete copies of maintenance manual in bound 216 x 279 (81/2 x 11 inch) booklets listing routine maintenance procedures, possible breakdowns and repairs, and a trouble shooting guide. The manuals shall include piping and equipment layouts and simplified wiring and control diagrams of the system as installed.

Water Treatment System; FIO.

Six complete copies of operating and maintenance manuals for the step-by-step water treatment procedures. The manuals shall include testing procedures used in determining water quality.

1.4 QUALIFICATIONS

Piping shall be welded in accordance with the qualified procedures using performance qualified welders and welding operators. Procedures and welders shall be qualified in accordance with ASME BPV IX. Welding procedures qualified by others, and welders and welding operators qualified by another employer may be accepted as permitted by ASME B31.1. The Contracting Officer shall be notified 24 hours in advance of tests and the tests shall be performed at the work site if practical. The welder or welding operator shall apply his assigned symbol near each weld he makes as a permanent record. Structural members shall be welded in accordance with Section 05055 WELDING, STRUCTURAL.

1.5 SAFETY REQUIREMENTS

Exposed moving parts, parts that produce high operating temperature, parts which may be electrically energized, and parts that may be a hazard to operating personnel shall be insulated, fully enclosed, guarded, or fitted with other types of safety devices. Safety devices shall be installed so that proper operation of equipment is not impaired.

1.6 DELIVERY, STORAGE, AND HANDLING

All equipment delivered and placed in storage shall be stored with protection from the weather, humidity and temperature variations, dirt and dust, or other contaminants.

1.7 PROJECT/SITE CONDITIONS

1.7.1 Verification of Dimensions

The Contractor shall become familiar with all details of the work, verify all dimensions in the field, and shall advise the Contracting Officer of any discrepancy before performing any work.

1.7.2 Drawings

Because of the small scale of the drawings, it is not possible to indicate all offsets, fittings, and accessories that may be required. The Contractor shall carefully investigate the plumbing, fire protection, electrical, structural and finish conditions that would affect the work to be performed and shall arrange such work accordingly, furnishing required offsets, fittings, and accessories to meet such conditions.

1.8 MANUFACTURER'S MULTI-YEAR COMPRESSOR WARRANTY

1.8.1 Equipment Warranty Tags and Guarantor's Local Representative

The Contractor shall furnish with each manufacturer's multi-year warranty the name, address, and telephone number (day, night, weekend, and holiday) of the service representative nearest to the location where the equipment is installed. Upon a request for service under the multi-year warranty, the service representative shall honor the warranty during the warranty period, and shall provide the services prescribed by the terms of the warranty. At the time of installation, each item of manufacturer's

multi-year warranted equipment shall be tagged with a durable, oil- and water-resistant tag, suitable for interior and exterior locations, resistant to solvents, abrasion, and fading due to sunlight. The tag shall be attached with copper wire or a permanent, pressure-sensitive, adhesive backing. The tag shall be installed in an easily noticed location attached to the warranted equipment. The tag for this equipment shall be similar to the following in format, and shall contain all of the listed information:

MANUFACTURER'S MULTI-YEAR WARRANTY EQUIPMENT TAG
Equipment/Product Covered: _____
Manufacturer:_____Model No.:_____Serial No.:__
Warranty Period: From _____to _____
Contract No.: _____
Warranty Contact: _____
Name: _____
Address: _____
Telephone: _____
STATION PERSONNEL SHALL PERFORM PREVENTIVE MAINTENANCE AND OPERATIONAL MAINTENANCE

PART 2 PRODUCTS

2.1 STANDARD COMMERCIAL PRODUCTS

Materials and equipment shall be standard products of a manufacturer regularly engaged in the manufacturing of such products, which are of a similar material, design and workmanship. The standard products shall have been in satisfactory commercial or industrial use for two years prior to bid opening. The two-year use shall include applications of equipment and materials under similar circumstances and of similar size. The two years experience shall be satisfactorily completed by a product which has been sold or is offered for sale on the commercial market through advertisements, manufacturer's catalogs, or brochures. Products having less than a two-year field service record shall be acceptable if a certified record of satisfactory field operation, for not less than 6000 hours exclusive of the manufacturer's factory tests, can be shown. All products shall be supported by a service organization. The Contractor shall submit a certified list of qualified permanent service organizations for support of the equipment which includes their addresses and qualifications. These service organizations shall be reasonably convenient to the equipment installation and shall be able to render satisfactory service to the equipment on a regular and emergency basis during the warranty period of the contract.

2.2 NAMEPLATES

Each major component of equipment shall have the manufacturer's name, address, type or style, and catalog or serial number on a plate securely attached to the item of equipment. As a minimum, nameplates shall be provided for:

a. Liquid-Chilling Package(s)
b. Compressor(s)
c. Compressor Driver(s)
d. Condenser(s)
e. Liquid Cooler(s)
f. Receiver(s)
g. Pump(s)
h. Pump Motor(s)

i. Cooling Tower(s)
j. Cooling Tower Gear Drive Assemblies
k. Refrigerant Leak Detectors
l. Expansion Tanks
m. Air Separator Tanks

2.3 ELECTRICAL WORK

Electrical equipment, motors, motor starters, and wiring shall be in accordance with Section 16415 ELECTRICAL WORK, INTERIOR. Electrical motor driven equipment specified shall be provided complete with motors, motor starters, and controls. Electrical characteristics and enclosure type shall be as shown, and unless otherwise indicated, all motors of 745 W (1 horsepower) and above with open, dripproof, or totally enclosed fan cooled enclosures, shall be high efficiency type. Field wiring shall be in accordance with manufacturer's instructions. Each motor shall conform to NEMA MG 1 and be of sufficient size to drive the equipment at the specified capacity without exceeding the nameplate rating of the motor. Motors shall be continuous duty with the enclosure specified. Motor starters shall be provided complete with thermal overload protection and other appurtenances necessary for the motor control indicated. Motors shall be furnished with a magnetic across-the-line or reduced voltage type starter as required by the manufacturer. Motor starter shall be provided in enclosures constructed in accordance with UL and NEMA 3R enclosures. Manual or automatic control and protective or signal devices required for the operation specified and any control wiring required for controls and devices specified, but not shown, shall be provided.

2.4 SELF-CONTAINED WATER COOLED CENTRIFUGUAL LIQUID CHILLER

Unless necessary for delivery purposes, units shall be assembled, leak-tested, charged (refrigerant and oil), and adjusted at the factory. In lieu of delivery constraints, a chiller may be assembled, leak-tested, charged (refrigerant and oil), and adjusted at the job site by a factory representative. Unit components delivered separately shall be sealed and charged with a nitrogen holding charge. Unit assembly shall be completed in strict accordance with manufacturer's recommendations. Chiller shall operate within capacity range and speed recommended by the manufacturer. Parts weighing 23 kg or more which must be removed for inspection, cleaning, or repair, such as motors, gear boxes, cylinder heads, casing tops, condenser, and cooler heads, shall have lifting eyes or lugs. Chiller shall be provided with factory installed insulation on surfaces subject to sweating including the liquid cooler, suction line piping, economizer, and cooling lines. Chiller shall include all customary auxiliaries deemed necessary by the manufacturer for safe, controlled, automatic operation of the equipment. Chiller shall be provided with a single point wiring connection for incoming power supply. Factory installed insulation shall be provided on all suction piping from the evaporator to the compressor and on the liquid cooler shell. Where motors are the gas-cooled type, factory installed insulation shall be provided on the cold-gas inlet connection to the motor per manufacturer's standard practice. Chiller's condenser and liquid cooler shall be provided with standard water boxes with grooved mechanical or flanged connections.

2.4.1 Centrifugal Type

Centrifugal chiller shall be constructed and rated in accordance with ARI 550. Chiller shall have a minimum full load efficiency and a part load efficiency in accordance with ARI 550 as indicated on the equipment

schedule. Chiller shall conform to ASHRAE 15. As a minimum, chiller shall include the following components as defined in paragraph CHILLER COMPONENTS.

a. Refrigerant and oil
b. Structural base
c. Controls package
d. Centrifugal compressor
e. Compressor driver, electric motor
f. Compressor driver connection
g. Liquid cooler evaporator
h. Water- cooled condenser coil
i. Receiver
j. Purge system for chillers which operate below atmospheric pressure
k. Tools

2.5 HEAT RECOVERY CHLLER

a. Provide packaged R-134a, heat recovery chiller for hot water heating and cooling purposes, constructed and rated in accordance with ARI 550. Condenser shall have 6 pass parallel circuiting to accommodate water temperature rise of 20oF. Capacity control shall be accomplished by sensing leaving hot water. Reciprocating, scroll, or screw compressors shall be provided with a step controller which shall control the heating load required. Maximum leaving condenser temperature shall be 140oF and maximum entering cooler water shall be 110oF. Maximum and minimum leaving source temperatures shall be 90oF and 40oF, respectively. Provide low refrigerant pressure cut-off to shut down the heat pump upon loss of refrigerant.

b. Heat recovery chiller shall be mounted on galvanized 1 inch deflection rated vibration isolators. Mason Industries, type SLFH or approved equal.

c. Heat pump shall be rated in accordance with the schedule shown on the drawings.

d. Unit shall have factory installed integral PWS starter,

2.6 CHILLER COMPONENTS

2.6.1 Refrigerant and Oil

Refrigerants shall be one of the fluorocarbon gases. Refrigerants shall have number designations and safety classifications in accordance with ASHRAE 34. Refrigerants shall meet the requirements of ARI 700 as a minimum. Refrigerants shall have an Ozone Depletion Potential (ODP) of less than or equal to 0.05.

2.6.2 Structural Base

Chiller and individual chiller components shall be provided with a factory-mounted welded structural steel base or support legs. Chiller and individual chiller components shall be isolated from the building structure by means of vibration isolators with published load ratings. Vibration isolators shall have isolation characteristics as recommended by the manufacturer for the unit supplied and the service intended.

2.6.3 Chiller Refrigerant Circuit

Chiller refrigerant circuit shall be completely piped and factory leak tested. For multicompressor units, not less than 2 independent refrigerant circuits shall be provided. Circuit shall include as a minimum a combination filter and drier, combination sight glass and moisture indicator, liquid-line solenoid valve for reciprocating or scroll units, an electronic or thermostatic expansion valve with external equalizer, charging ports, compressor service valves, and superheat adjustment.

2.6.4 Controls Package

Chiller shall be provided with a complete factory mounted and prewired electric or microprocessor based control system. Controls package shall be unit-mounted which contains as a minimum a digital display or acceptable gauges, an on-auto-off switch, motor starters, power wiring, control wiring, and disconnect switches. Controls package shall provide operating controls, monitoring capabilities, programmable setpoints, safety controls, and EMCS interfaces as defined below.

2.6.4.1 Operating Controls

Chiller shall be provided with the following adjustable operating controls as a minimum.

a. Leaving chilled water temperature control

b. Adjustable timer to prevent compressor from short cycling

c. Automatic lead/lag controls (adjustable) for multiprocessor units

d. Load limiting

e. System capacity control to adjust the unit capacity in accordance with the system load and the programmable setpoints. Controls shall automatically re-cycle the chiller on power interruption.

f. Startup and head pressure controls to allow system operation at all ambient temperatures down to 10 degrees C

2.6.4.2 Monitoring Capabilities

During normal operations, the control system shall be capable of monitoring and displaying the following operating parameters. Access and operation of display shall not require opening or removing any panels or doors.

a. Entering and leaving chilled water temperatures
b. Self diagnostic
c. Operation status
d. Operating hours
e. Number of starts
f. Compressor status (on or off)
g. Refrigerant discharge and suction pressures
h. Condenser water entering and leaving temperatures
i. Number of purge cycles over the last 7 days

2.6.4.3 Programmable Setpoints

The control system shall be capable of being reprogrammed directly at the unit. No parameters shall be capable of being changed without first entering a security access code. The programmable setpoints shall include

the following as a minimum.

a. Leaving Chilled Water Temperature
b. Leaving Condenser Water Temperature
c. Time Clock/Calender Date

2.6.4.4 Safety Controls with Manual Reset

Chiller shall be provided with the following safety controls which automatically shutdown the chiller and which require manual reset.

a. Low chilled water temperature protection
b. High condenser refrigerant discharge pressure protection
c. Low suction pressure protection
d. Chilled water flow detection
e. Motor current overload and phase loss protection
f. High motor winding temperature protection for hermetic motors
g. Low oil flow protection

2.6.4.5 Safety Controls with Automatic Reset

Chiller shall be provided with the following safety controls which automatically shutdown the chiller and which provide automatic reset.

a. Over/under voltage protection
b. Phase reversal protection
c. Chilled water flow interlock

2.6.4.6 Remote Alarm

During the initiation of a safety shutdown, the control system shall be capable of activating a remote alarm bell. In coordination with the chiller, the contractor shall provide an alarm circuit (including transformer if applicable) and a minimum 100 mm (4 inch) diameter alarm bell. Alarm circuit shall activate bell in the event of machine shutdown due to the chiller's monitoring of safety controls. The alarm bell shall not sound for a chiller that uses low-pressure cutout as an operating control.

2.6.4.7 Energy Management Control System (EMCS) Interface

The control system shall be capable of communicating all data to a remote integrated DDC processor through a single shielded cable. The data shall include as a minimum all system operating conditions, capacity controls, and safety shutdown conditions. The control system shall also be capable of receiving at a minimum the following operating commands.

a. Remote Unit Start/Stop
b. Remote Chilled Water Reset
c. Remote Condenser Water Reset

2.6.5 Compressor(s)

2.6.5.1 Reciprocating Compressor(s)

All rotating parts shall be statically and dynamically balanced at the factory to minimize vibration. Compressors shall be capable of operating at partial-load conditions without increased vibration over the normal vibration at full load operation and shall be capable of continuous

operation down to the lowest step of unloading as specified. Compressors of size 7.45 kW (10 horsepower) and above shall have an oil lubrication system of the reversible, forced-feed type with oil strainer. Shaft seal in open-type units shall be mechanical type. Piston speed for open-type compressors shall not exceed the manufacturer's recommendation or 6 m/s (1200 fpm), whichever is less. Compressors shall include:

a. Vertical, V, W, or radial cylinder design

b. Oil lubrication

c. Integrally cast block of close-grained iron or cast aluminum block with hardened steel cylinder sleeves

d. Oil-level bull's eye

e. Cast cylinder heads

f. Cast-aluminum or forged-steel connecting rods

g. Cast iron or forged-steel crankshaft

h. Main bearings of the sleeve-insert type

i. Crankcase oil heaters controlled as recommended by the manufacturer

j. Suction and discharge refrigerant service valves that are flange connected, wrench operated, with cap

k. A strainer on the suction side of the compressor

l. A hot-gas muffler to reduce vibration and noise from pulsations

2.6.5.2 Scroll Compressor(s)

Compressors shall be of the compliant, hermetically sealed design. Compressors shall be mounted on vibration isolators to minimize vibration and noise. Rotating parts shall be statically and dynamically balanced at the factory to minimize vibration. Lubrication system shall be centrifugal pump type equipped with a means for determining oil level and an oil charging valve. Crankcase oil heater shall be provided if standard or if available as an option. If provided, the crankcase oil heater shall be controlled as recommended by the manufacturer.

2.6.5.3 Rotary Screw Compressor(s)

Compressors shall operate stably for indefinite time periods at any stage of capacity reduction without hot-gas bypass. Provision shall be made to insure proper lubrication of bearings and shaft seals on shutdown with or without electric power supply. Rotary screw compressors shall include:

a. An open or hermetic, positive displacement, oil-injected design directly driven by the compressor driver. Compressor shall allow access to internal compressor components for repairs, inspection, and replacement of parts.

b. Rotors which are solid steel forging with sufficient rigidity for proper operation.

c. A maximum rotor operating speed no greater than 3600 RPM.

d. Casings of cast iron, precision machined for minimal clearance about periphery of rotors.

e. A lubrication system of the forced-feed type that provides oil at the proper pressure to all parts requiring lubrication.

f. Shaft main bearings of the sleeve type with heavy duty bushings or rolling element type in accordance with AFBMA Std 9 or AFBMA Std 11. Bearings shall be conservatively loaded and rated for an L(10) life of not less than 200,000 hours.

g. A differential oil pressure or flow cutout to allow the compressor to operate only when the required oil pressure or flow is provided to the bearings.

h. A temperature- or pressure-initiated, hydraulically actuated, single-slide-valve, capacity-control system to provide minimum automatic capacity modulation from 100 percent to 25 percent.

i. An oil separator and oil return system to remove oil entrained in the refrigerant gas and automatically return the oil to the compressor.

j. Crankcase oil heaters controlled as recommended by the manufacturer.

2.6.5.4 Centrifugal Compressor(s)

Centrifugal compressors shall be single or multistage, having dynamically balanced impellers, either direct or gear driven by the compressor driver. Impellers shall be over-speed tested at 1.2 times the impeller-shaft speed. Impeller shaft shall be heat-treated alloy steel with sufficient rigidity for proper operation at any required operating speed. Centrifugal compressors shall include:

a. Shaft main bearings that are the rolling element type in accordance with AFBMA Std 9 or AFBMA Std 11, journal type with bronze or babbitt liners, or of the aluminum-alloy one-piece insert type. Bearings shall be rated for an L(10) life of not less than 200,000 hours.

b. Casing of cast iron, aluminum, or steel plate with split sections gasketed and bolted or clamped together.

c. Lubrication system of the forced-feed type that provides oil at the proper pressure to all parts requiring lubrication.

d. Provisions to ensure proper lubrication of bearings and shaft seals prior to starting and upon stopping with or without electric power supply. On units providing forced-feed lubrication prior to starting, a differential oil pressure cutout interlocked with the compressor starting equipment shall allow the compressor to operate only when the required oil pressure is provided to the bearings.

e. Oil sump heaters controlled as recommended by the manufacturer.

f. Temperature-or pressure-actuated prerotation vane or suction damper to provide automatic capacity modulation from 100 percent capacity to 10 percent capacity. If operation to 10 percent capacity cannot be achieved without providing hot-gas bypass, then the Contractor shall indicate in the equipment submittal the load percent at which hot gas bypass is required.

2.6.6 Compressor Driver, Electric Motor

Motor shall be the polyphase, induction type conforming to NEMA MG 1. Motors shall be suitable for use with the indicated electrical power characteristics and the type of starter provided. Motor starters shall be the reduced voltage, closed-transition type conforming to NEMA ICS 1 and NEMA ICS 2. Motor starter shall be unit mounted as indicated with starter type, wiring, and accessories coordinated by the chiller manufacturer. Starter shall be able to operate in temperatures up to 120 degrees F.

2.6.7 Compressor Driver Connections

Each compressor shall be driven by a direct connected flexible coupling, except that flexible coupling is not required on hermetic units. Flexible couplings shall be of the type that does not require lubrication. Each machine driven through speed-increasing gears shall be so designed as to assure self-alignment, interchangeable parts, proper lubrication, and minimum of unbalanced forces. Bearings shall be of the sleeve or roller type. Pressure lubrication with pump and cooler shall be provided. Gear cases shall be oil tight. Shaft extensions shall be provided with seals to retain oil and exclude all dust.

2.6.8 Liquid Cooler (Evaporator)

Cooler shall be of the shell-and-coil or shell-and-tube type design. Condenser's refrigerant side shall be designed and factory pressure tested to comply with ASHRAE 15. Condenser's water side shall be designed and factory pressure tested for not less than 1,000 kPa . Cooler shell shall be constructed of seamless or welded steel. Coil bundles shall be totally removable and arranged to drain completely. Tubes shall be seamless copper, plain, integrally finned with smooth bore or integrally finned with enhanced bore. Each tube shall be individually replaceable. Tubes shall be installed into carbon mild steel tube sheets by rolling. Tube baffles shall be properly spaced to provide adequate tube support and cross flow. Performance shall be based on a water velocity not less than 0.91 m/s (3 fps) nor more than 3.7 mm (12 fps) and a fouling factor of 0.00025.

2.6.9 Water-Cooled Condenser Coil

Condenser shall be of the shell-and-coil or shell-and-tube type design. Condenser's refrigerant side shall be designed and factory pressure tested to comply with ASHRAE 15. Condenser's water side shall be designed and factory pressure tested for not less than 1,000 kPa . Condensers shall be complete with pressure relief valve or rupture disk, water drain connections, and refrigerant charging valve. Low pressure refrigerant condenser shall be provided with a purge valve located at the highest point in the condenser to purge non-condensibles trapped in the condenser. Condenser shell shall be constructed of seamless or welded steel. Coil bundles shall be totally removable and arranged to drain completely. Tubes shall be seamless copper, plain, integrally finned with smooth bore or integrally finned with enhanced bore. Each tube shall be individually replaceable, except for the coaxial tubes. Tube baffles shall be properly

spaced to provide adequate tube support and cross flow. Performance shall be based on water velocities not less than 0.91 m/s (3 fps) nor more than 3.7 mm (12 fps) and a fouling factor of 0.00025.

2.6.10 Receivers

Liquid receivers not already specified herein as an integral factory-mounted part of a package, shall be designed, fitted, and rated in accordance with the recommendations of ARI 495, except as modified herein. Receiver shall bear a stamp certifying compliance with ASME BPV VIII Div 1 and shall meet the requirements of ASHRAE 15. Inner surfaces shall be thoroughly cleaned by sandblasting or other approved means. Each receiver shall have a storage capacity not less than 20 percent in excess of that required for the fully-charged system. Each receiver shall be equipped with inlet, outlet drop pipe, drain plug, purging valve, relief valves of capacity and setting required by ASHRAE 15, and two bull's eye liquid-level sight glasses. Sight glasses shall be in the same vertical plane, 90 degrees apart, perpendicular to the axis of the receiver, and not over 75 mm horizontally from the drop pipe measured along the axis of the receiver. In lieu of bull's eye sight glass, external gauge glass with metal glass guard and automatic closing stop valves may be provided.

2.6.11 Chiller Purge System

Chillers which operate at pressures below atmospheric pressure shall be provided with a purge system that operates independently of the chiller. Purge system shall automatically remove air, water vapor, and non-condensible gases from the chiller's refrigerant. Purge system shall condense, separate, and return all refrigerant back to the chiller. An oil separator shall be provided with the purge system if required by the manufacturer. Purge system shall not discharge to occupied areas, or create a potential hazard to personnel. Purge system shall include a purge pressure gauge, number of starts counter, and an elapsed time meter. Purge system shall include lights or an alarm which indicate excessive purge or an abnormal air leakage into chiller.

2.6.12 Tools

One complete set of special tools as recommended by the manufacturer for field maintenance of the system shall be provided. Tools shall be mounted on a tool board in the equipment room or contained in a toolbox as directed by the Contracting Officer.

2.6.13 CHILLER VARIABLE FREQUENCY

a. VFD shall be microprocessor based, PWM design to convert the utility voltage and frequency to a variable voltage and frequency output. Design of the VFD shall include at minimum:

1. DC bus filter chokes which limits harmonic distortion.
2. Input displacement power factor shall exceed 0.95 regardless of speed and load.
3. Minimum efficiency of 97% at rated load and 60 Hz.
4. NEMA 1 ventilated enclosure with padlockable door, door mounted circuit breaker, 65,000 AIC.
5. Digital display metering the following:
   a. all three phases line voltage and motor current.
   b. frequency setpoint.
   c. motor frequency and RPM.

d. kilowatts.
e. drive temperature.
f. elapsed time.

6. LED's to indicate run, fault, alarm, up-to-speed, and drive ready status.
7. One analog output signal, 4-20 mA, for connection to DDC system.
8. Soft-start, 12 second linear acceleration/coast-to-stop.
9. Current limited to 100%.
10. Auto-restart after an interruption of power.
11. Output speed reference signal 2-10 Vdc.
12. Motor overload protection.
13. Loss of follower signal - in the event of loss to input speed signal, the VFD shall default to hold speed based on last reference received.
14. Phase loss, reversal, and imbalance protection.
15. Power loss ride-through.
16. Overvoltage/undervoltage protection.
17. Motor overtemperature protection.

b. Clean Power Rectifier to eliminate line harmonics reflected into the utility power system.

c. Isolation Power Transformer.

d. Testing Requirements: The entire chiller assembly with Variable Frequency Drive shall be tested under the conditions previous specified. Factory Performance Test shall be conducted in accordance with ARI Standard 550/590-98 procedures and tolerances.

2.7 ACCESSORIES

2.7.1 Pumps

Pumps shall be the electrically driven, non-overloading, centrifugal type which conform to HI 1.1-1.5. Pump capacity, efficiency, motor size, and impeller type shall be as indicated on the drawings. Pumps shall be selected at or near peak efficiency. Pump curve shall rise continuously from maximum capacity to shutoff. Pump motor shall be totally enclosed and have sufficient wattage (horsepower) for the service required. Each pump motor shall be equipped with an across-the-line magnetic controller in a NEMA 250, Type 1 enclosure with "START-STOP" switch in the cover.

2.7.1.1 Construction

Shaft seal shall be mechanical-seal type. Impeller shall be statically and dynamically balanced. Each pump casing shall be designed to withstand the discharge head specified plus the static head on system plus 50 percent of the total, but not less than 862 kPa (125 psig). Pump casing and bearing housing shall be close grained cast iron. High points in the casing shall be provided with manual air vents; low points shall be provided with drain plugs. Impeller, impeller wearing rings, glands, casing wear rings, and shaft sleeve shall be bronze. Shaft shall be carbon or alloy steel, turned and ground. Bearings shall be ball-bearings, roller-bearings, or oil-lubricated bronze-sleeve type bearings, and be efficiently sealed or isolated to prevent loss of oil or entrance of dirt or water. Pump and motor shall be mounted on a common cast iron base having lipped edges and tapped drainage openings or structural steel base with lipped edges or drain pan and tapped drainage openings. Pump shall be provided with shaft

coupling guard. Pump motor shall have the required capacity to prevent overloading with pump operating at any point on its characteristic curve. Pump speed shall not exceed 3,600 rpm, except where the pump head is less than 180 kPa, the pump speed shall not exceed 1,750 rpm. Pump shall be accessible for servicing without disturbing piping connections.

2.7.1.2 Mechanical Shaft Seals

Seals shall be single, inside mounted, end-face-elastomer bellows type with stainless steel spring, brass or stainless steel seal head, carbon rotating face, and tungsten carbide or ceramic sealing face. Glands shall be bronze and of the water-flush design to provide lubrication flush across the face of the seal. Bypass line from pump discharge to flush connection in gland shall be provided, with filter or cyclone separator in line.

2.7.1.3 Pump Variable Speed Drives

The VSD shall be a sine-coded pulse width modulated design that operates directly from 3 phase,460 vac. +/- 10% 60 Hz utility power. The motor shall be NEMA Type I induction type. The drive unit shall maintain a 120% current overload capability for 60 seconds with automatic stall prevention and voltage boost to prevent nuisance tripping during starting load and line side transient conditions. The drive unit shall be of the converter/inverter design using insulated gate bipolar transistors as output devices. Control logic shall be 8 bit micro-computer based driving all internal and external interface functions. The entire drive unit shall be housed in a NEMA 1 enclosure.

a. Functional Features:

(1) Possible speed variation 10% to 100%.
(2) Adjustable acceleration/deceleration rates.
(3) Frequency stability 0.1%+/0.
(4) Minimum and maximum speed control.
(5) Hand/off/auto switch with manual potentiometer.
(6) Speed reference signal for monitoring speed remotely.
(7) Indicating lights for power on, over temperature current limit, under and over voltage overcurrent.
(8) Door mounted meter to indicate drive speed.
(9) Provide line bypass starter to run the a/c motor at full speed while servicing the VSMC.
(10) External start-stop signal capability.
(11) Process follower 4-20 Ma or 1-10 VDC.
(12) Three (3) selectable output frequency ranges to at least 120 Hz.

b. Safety and Other Features:

(1) Current limit to 11%.
(2) Instantaneous overcurrent trip.
(3) Under and over-voltage trips.
(4) Overtemperature trip.
(5) Automatic reset and restart feature for up to five restarts after tripping.
(6) Separate power and control circuitry.
(7) Protection against short circuiting and power interruption.
(8) Motor thermal overload relays at output.
(9) Enclosure door interlocked disconnect switch.
(10) Solid state ground fault protection.

(11) Control transformer and contacts.
(12) Anti-windmill protection.
(13) Run and fault contacts.
(14) Reactors (5% Impedance) in each phase on line side of drive.

c. The speed controller shall respond to Digital Keypad from the sequence panel when in manual mode and respond to a varying pressure control signal when operating in automatic mode.

d. The equipment shall comply with all industry standard, local and state codes and shall be UL listed. The unit shall be suitable for safe and reliable operation.

e. Provide drive with noise reduction circuitry and internal and external devices as necessary to eliminate any pure tone sound developed by drive and/or motor. A pure tone is defined as any one-third octave band sound pressure level being 8dB (re: 20 microPa) above any adjacent one-third octave band when measured 3-feet from drive, motor or any side of air handling unit.

f. Start-up: Full factory start-up services of the VSD shall be provided by the manufacturer's representative. This shall include inspection and verification of actual installation, starting up and adjustment and observation of its successful operation. Full start-up training shall also be provided to maintenance staff.

2.7.2 Expansion Tanks

Expansion tanks shall be welded steel, constructed, tested and stamped in accordance with ASME BPV VIII Div 1 for a working pressure of 862 kPa (125 psig) and precharged to the minimum operating pressure. Expansion tanks shall have a replaceable diaphragm and be the captive air type. Tanks shall accommodate expanded water of the system generated within the normal operating temperature range, limiting this pressure increase at all components in the system to the maximum allowable pressure at those components. Each tank air chamber shall be fitted with an air charging valve. Tanks shall be supported by steel legs or bases for vertical installation or steel saddles for horizontal installations. The only air in the system shall be the permanent sealed-in air cushion contained within the expansion tank.

2.7.3 Air Separator Tanks

External air separation tank shall be steel, constructed, tested, and stamped in accordance with ASME BPV VIII Div 1 for a working pressure of 862 kPa (125 psig).

2.7.4 Refrigerant Leak Detector

Detector shall be the continuously-operating, halogen-specific type. Detector shall be appropriate for the refrigerant in use. Detector shall be specifically designed for area monitoring and shall include a single sampling point installed where indicated. Detector design and construction shall be compatible with the temperature, humidity, barometric pressure and voltage fluctuations of the operating area. Detector shall have an adjustable sensitivity such that it can detect refrigerant at or above 3 parts per million (ppm). Detector shall be supplied factory-calibrated for the appropriate refrigerant(s). Detector shall be provided with an alarm relay output which energizes when the detector detects a refrigerant level

at or above the TLV-TWA (or toxicity measurement consistent therewith) for the refrigerant(s) in use. The detector's relay shall be capable of initiating corresponding alarms and ventilation systems as indicated on the drawings. Detector shall be provided with a failure relay output that energizes when the monitor detects a fault in its operation. Detector shall be compatible with the facility's energy management and control system (EMSS). The EMCS shall be capable of generating an electronic log of the refrigerant level in the operating area, monitoring for detector malfunctions, and monitoring for any refrigerant alarm conditions.

2.7.5 Refrigerant Relief Valve/Rupture Disc Assembly

The assembly shall be a combination pressure relief valve and rupture disc designed for refrigerant usage. The assembly shall be in accordance with ASME BPV IX and ASHRAE 15. The assembly shall be provided with a pressure gauge assembly which will provide local indication if a rupture disc is broken. Rupture disc shall be the non-fragmenting type.

2.7.6 Refrigerant Signs

Refrigerant signs shall be a medium-weight aluminum type with a baked enamel finish. Signs shall be suitable for indoor or outdoor service. Signs shall have a white background with red letters not less than 12 mm in height.

2.7.6.1 Installation Identification

Each new refrigerating system shall be provided with a refrigerant sign which indicates the following as a minimum:

a. Contractor's name.
b. Refrigerant number and amount of refrigerant.
c. The lubricant identity and amount.
d. Field test pressure applied.

2.7.6.2 Controls and Piping Identification

Refrigerant systems containing more than 50 kg of refrigerant shall be provided with refrigerant signs which designate the following as a minimum:

a. Valves or switches for controlling the refrigerant flow, the ventilation system, and the refrigerant compressor(s).

b. Pressure limiting device(s).

2.7.7 Refrigerant Recovery/Recycle System

A manually initiated refrigerant recovery/recycle system shall be provided, consisting of a motor-driven, air- or water-cooled, reciprocating condensing unit and a receiver of sufficient capacity to store the entire refrigerant charge of the largest water-chilling system. For refrigerants with atmospheric pressure boiling temperature below 20 degrees C, the receiver shall be sized so that it is no more than 80 percent full at 32 degrees C. For refrigerants with atmospheric pressure boiling temperature above 20 degrees C, the receiver shall be sized so that it is no more than 90 percent full at 32 degrees C. The recovery/recycle system condensing unit shall be assembled as a complete unit and meet the requirements of ASHRAE 15. The system components shall be portable and shall include all valves, connections, and controls required for operation. Receiver and

relief devices shall conform to the requirements of ASME BPV VIII Div 1. The recovery/recycle system shall be tested and listed to conform to ARI 740 for refrigerant recovery/recycle systems by a recognized national testing laboratory. For refrigerants with atmospheric pressure boiling temperature below 20 degrees C, the recovery/recycle unit shall have an ARI 740 vapor refrigerant recovery rate of no less than 8.5 kg/minute. For refrigerants with atmospheric pressure boiling temperature above 20 degrees C, the recovery/recycle unit shall have an ARI 740 vapor refrigerant recovery rate of no less than 1.0 kg/minute.

2.7.8 Field Installed Insulation

Field installed insulation shall be as specified in Section 15080 THERMAL INSULATION FOR MECHANICAL SYSTEMS, except for header and waterbox insulation which shall be flexible cellular insulation in accordance with ASTM C 534, Type I.

2.7.9 Gaskets

Gaskets shall conform to ASTM F 104 - classification for compressed sheet with nitrile binder and acrylic fibers for maximum 371 degrees C (700 degrees F) service.

2.7.10 Bolts and Nuts

Bolts and nuts, except as required for piping applications, shall be in accordance with ASTM A 307. The bolt head shall be marked to identify the manufacturer and the standard with which the bolt complies in accordance with ASTM A 307.

2.8 COOLING TOWER

2.8.1 Fire Safety

Towers shall conform to NFPA 214. Fire hazard rating for plastic impregnated materials shall not exceed 25. Plastics shall not drip or run during combustion. Determine ratings by ASTM E 84 or NFPA 255.

2.8.2 Fiberglass Reinforced Plastic (FRP)

FRP components shall be inert, corrosion resistant, and fire-retardant with a thickness of 3.66 kg/square meter (12 ounces per square foot). FRP components shall contain an ultraviolet (UV) ray inhibitor as per CTI Std-137, Grade 1 or 3.

2.8.3 Zinc-Coated Steel

Components fabricated of zinc-coated steel shall be not lighter than 16 gauge steel, protected against corrosion by a zinc coating. The zinc coating shall conform to ASTM A 153/A 153M and ASTM A 123/A 123M, as applicable and have an extra heavy coating of not less than 0.76 kg per square meter (2-1/2 ounces per square foot) of surface. Galvanized surfaces damaged due to welding shall be coated with zinc rich coating conforming to ASTM D 520, Type 1.

2.8.4 Polyvinyl Chloride (PVC) Formed Sheets

ASTM D 1784, Type I, Grade 1 with a flame spread rating of 15 or less per ASTM E 84.

2.8.5 Hardware

Bolts shall be cadmium-plated, zinc-coated steel, or Type 304 stainless steel. Each bolt shall be provided with neoprene and cadmium-plated steel washers under the heads. Nails shall be silicon bronze, commercial bronze, or stainless steel. Hardware shall meet the salt-spray fog test as defined by ASTM B 117.

2.8.6 Noise Control

Sound power levels (in decibels with a reference pressure of 0.0002 microbar) of the cooling tower shall not exceed 80 dBA at 5 feet. Sound power level data for the cooling tower shall be based on tests conducted in accordance with ANSI S1.13.

2.8.7 Conventional Type Tower

a. Factory-Assembled: Each tower shall be the induced mechanical draft, counterflow, factory fabricated, factory-assembled type.

b. Field-Assembled: Each tower shall be the induced mechanical draft, counterflow, factory fabricated, field-assembled type. Notching structural members may be permissible only if the members are increased proportionately in size to provide equivalent strength.

2.8.7.1 Casing

Casing shall be constructed of FRP. Towers shall be designed and constructed to withstand a wind pressure of not less than 1.4 KPa (30 pound-force per square foot (psf)) on external surfaces. Fan decks shall be designed to withstand a live load of not less than 1.9 kPa 40 psf in addition to the concentrated or distributed loads of equipment mounted on the fan decks.

2.8.7.2 Cold-Water Basin

Basin shall be completely watertight and constructed of FRP. Basin shall be constructed and installed to ensure that air will not be entrained in outlets when operating and no water will overflow on shutdown. Each individual sump shall be provided with an individual outlet. Each outlet shall be provided with a 1/2 inch mesh, zinc-coated steel wire securely mounted to prevent trash from entering the outlet. Each basin shall be provided with overflow and valved drain connections. Each basin shall be provided with a float-controlled, makeup water valve as indicated. The makeup water shall discharge not less than 50 mm or two pipe diameters, whichever is greater, above the top of the basin.

2.8.7.3 Hot-Water Distribution

Design water distribution systems for each cell of each tower so that a water flow of 140 percent of specified water flow will not cause overflowing or splashing. Water distribution systems shall be accessible and permit flexibility of operation. Provide removable covers of same material and thickness as casing for entire water distribution basin. Support covers by basin sides with top of cover flush with top of basin. Provide separate regulation and stop valves for complete balancing and complete shutoff from each cell. Systems shall be self-draining and

nonclogging. The water distribution system shall be either one of the following types.

a. Open Basins: Basins shall be provided with a splash box or baffles to minimize splashing of incoming hot water, holes that evenly distribute the water over the entire decking area, and a basin cover. Holes used in a water basin shall be provided with ceramic or plastic orifice inserts.

b. Spray Nozzles: Spray nozzles shall be cleanable; stainless steel, bronze, or high-impact plastic, nonclogging, removable; and, spaced for even distribution.

2.8.7.4 Fill Material

The fill shall be the following materials as specified. PVC formed sheets arranged in a honeycomb or waveform configuration; zinc-coated steel treated Douglas-fir; or treated hemlock and treated redwood. Zinc-coated steel shall have a minimum of 765 g per square meter of surface. Fill material shall be free to expand or contract without warping. PVC fill shall not be provided when inlet temperatures exceed 52 degrees C (125 degrees F). No plasticized wood cellulose shall be provided for fill material. Fill shall be removable or otherwise made accessible for cleaning. Provide space supports as required to prevent sagging and misalignment, and provide for an even mixing of air and water.

2.8.7.5 Drift Eliminator

Provide in tower outlet to limit drift loss to not over 0.02 percent of specified water flow. Eliminators shall be constructed of not less than 10 mm (3/8 inch) lumber or polyvinyl chloride (PVC).

2.8.7.6 Fan Cylinder

Each fan shall be mounted in a fan cylinder to elevate the fan discharge air. Total extension height shall not exceed the fan diameter. Fan cylinders shall be constructed of zinc-coated steel, lumber, Type 304 stainless steel, or FRP and be compatible with the entire tower construction. Each fan cylinder shall be provided with a zinc-coated steel 2.75 mm (12 gauge) wire mesh securely mounted to the top of the cylinder in accordance with manufacturer's recommendations.

2.8.7.7 Framework and Equipment Supports

Framework and equipment supports shall be FRP, or lumber. Materials provided for framework, casings and equipment supports shall be compatible.

2.8.7.8 Structural Supports

The cooling tower shall be provided with either integral structural supports or with a field-erected. Structural supports provided in accordance with the recommendations of the manufacturer of the tower. All structural work shall be provided in accordance with Section 05500 MISCELLANEOUS METALS for structural requirement and the entire structural assembly shall be hot dipped galvanized and painted in accordance with Section 0900. Provide shop drawings stamped by a licensed structural engineer for approval prior to fabrication of a field erected structural frame is provided.

2.8.7.9 Foundations

Cooling tower foundations shall meet the requirements of the cooling tower manufacturer and be as indicated. Foundation design shall be based on the load conditions and soil bearing value indicated. Foundation calculations shall be submitted with the equipment drawings.

2.8.8 Louvers

Air inlets for each cooling tower shall be provided with individually removable louvers arranged to prevent the escape of water. Louvers shall be FRP. Materials provided for casings and louvers shall be compatible; one material shall not produce stains upon the other. Louvers constructed of lumber shall be of a thickness to withstand alternate wetting and drying without cracking or splitting. Air intakes shall be provided with 25 mm zinc-coated steel mesh.

2.8.9 Fans

Fans shall be the adjustable-pitch propeller type, constructed of zinc-coated steel, Type 304 stainless steel, aluminum or an aluminum alloy, or FRP. Propeller type shall have a maximum tip speed of 55 m (11,000 fpm). Fan blade assembly shall be both statically and dynamically balanced after assembly of the cooling tower. Fan hub shall be constructed of zinc-coated steel stainless steel a cast aluminum with adequate surface protection against corrosion. Complete fan assembly (fan and mounting) shall be designed to give maximum fan efficiency and long life when handling saturated air at high velocities.

2.8.10 Speed Reducer Gears and Drive Shaft

Speed reducer gears shall be rated in accordance with CTI Std-111. Gear reducers shall be of the spiral bevel, single reduction or helical, double reduction type. Reducer shall be mounted in accordance with manufacturer's recommendations. Each reducer shall be provided with an oil level cutoff switch interlocked to the fan motor. Each reducer shall be provided with an oil level sight glass, fill, drain, and vent lines located in a readily accessible position. Drive shafts shall be the full floating type with flexible couplings at both ends and have a service factor of 1.0 or greater. Drive shafts shall be of stainless steel, fitted each end with flexible couplings (stainless steel plate type). Each drive shaft shall be provided with a galvanized steel guard, to prevent damage to surrounding equipment in case of shaft failure. Provision shall be made for lubrication of all bearings. Bearings shall be accessible to the extent that each bearing can be lubricated without dismantling fan.

2.8.11 Fan Motor

Each motor shall be a single speed, totally enclosed, insulation Class B, NEMA Design B, continuous-rated, and conforming to NEMA MG 1. Fan motors shall have totally enclosed explosion proof enclosures and be located outside the discharge airstream. Motors shall be mounted according to manufacturer's recommendations. Provide a motor with a remote VFP with bypass starter.

2.8.11.1 Cooling Tower Variable Frequency Drive

Each cooling tower shall have a single variable frequency drive (VFD) to

modulate the speed of the fans. The VFD shall have the following features.

a. Drive shall be Underwriter Laboratory Listed.

b. The drive shall be a voltage source, GTR or IBGT power transistor based inverter shall use a high carrier frequency for low drive noise and motor sing. The drive shall also be provided with an auto transformer to prevent noise backfeed.

c. Drive shall be capable of operating in an ambient temperature of 14 degrees F and 104 degrees F with a line voltage variation of plus or minus 10 percent.

d. Self protection features:

(1) Under voltage protection.

(2) Over voltage protection.

(3) Current overload protection.

(4) Short circuit protection.

(5) Power failure protection.

(6) Ground fault protection.

(7) Over-temperature protection.

e. A four digit LED readout shall be provided to indicate the following:

(1) Drive enabled.

(2) Output frequency.

(3) All fault conditions.

f. The drive shall be capable of automatically restarting after any of the following:

(1) Overload.

(2) Over-voltage.

(3) Converter over-current.

(4) Inverter over-current.

(5) Power failure.

g. The drive shall be provided with an across the line bypass feature.

h. The following drive parameters shall be user adjustable:

(1) Acceleration speed (1 to 300 seconds)

(2) Deceleration speed (1 to 300 seconds)

(3) Minimum speed limit

(4) Maximum speed limit.

i. The drive shall have a front mounted "HAND - OFF - AUTO" selector switch and a potentiometer for adjusting drive speed in the "HAND" position.

j. Panel: The VFD shall be protected in a NEMA 4 weatherproof enclosure.

2.8.12 Stairways and Ladders

Provide stairs, 60-degree ship ladders or straight-rung ladders of standard design, starting at ground level and extending as high as required to gain access to fan decks and water distribution systems. Stairways and ladders shall be hot-dip, zinc-coated steel. Ladders higher than 3.66 meters (12 feet) shall have a safety cage.

2.8.13 Handrailings

Steel handrailings shall be not less than 1067 mm (42 inches) high around the exterior of each working surface that is 3.66 m (12 feet) or more above the ground, roof, or other supporting construction. Railings shall be not smaller than 32 mm (1-1/4 inch) zinc-coated steel pipe with standard zinc-coated steel railing.

2.8.14 Access Doors

Each tower shall be provided with access doors at grade level to provide entry to the interior for service maintenance without removal of the fill. Doors shall be provided with doors on each endwall of each cooling tower cell. Frame and brace access doors to prevent damage when opening and closing. Doors shall be located adjacent to float controls.

2.9 WATER TREATMENT SYSTEMS

When water treatment is specified, the use of chemical-treatment products containing hexavalent chromium (Cr) is prohibited.

2.9.1 Water Analysis

Conditions of make-up water to be supplied to the condenser and chilled water systems shall be sampled and tested by the chemical treatment subcontractor r the following constituents.

Date of Sample	_____	
Temperature	_____	degrees C.
Silica (SiO 2)	_____	ppm (mg/1)
Insoluble	_____	ppm (mg/1)
Iron and Aluminum Oxides	_____	ppm (mg/1)
Calcium (Ca)	_____	ppm (mg/1)
Magnesium (Mg)	_____	ppm (mg/1)
Sodium and Potassium (Na and K)	_____	ppm (mg/1)
Carbonate (HCO 3)	_____	ppm (mg/1)
Sulfate (SO 4)	_____	ppm (mg/1)
Chloride (Cl)	_____	ppm (mg/1)
Nitrate (NO 3)	_____	ppm (mg/1)
Turbidity	_____	unit
pH	_____	

Residual Chlorine	_____ ppm (mg/1)
Total Alkalinity	_____ epm (meq/1)
Non-Carbonate Hardness	_____ epm (meq/1)
Total Hardness	_____ epm (meq/1)
Dissolved Solids	_____ ppm (mg/1)
Fluorine	_____ ppm (mg/1)
Conductivity	_____ micrmho/cm

2.9.2 Chilled and Condenser Water

Water to be used in the chilled and condenser water systems shall be treated to maintain the conditions recommended by this specification as well as the recommendations from the manufacturers of the condenser and evaporator coils. Chemicals shall meet all required federal, state, and local environmental regulations for the treatment of evaporator coils and direct discharge to the sanitary sewer.

2.9.3 Water Treatment Services

The services of a company regularly engaged in the treatment of condenser and chilled water systems shall be used to determine the correct chemicals required, the concentrations required, and the water treatment equipment sizes and flow rates required. The company shall maintain the chemical treatment and provide all chemicals required for the condenser and chilled water systems for a period of 1 year from the date of occupancy. The chemical treatment and services provided over the 1 year period shall meet the requirements of this specification as well as the recommendations from the manufacturers of the condenser and evaporator coils. Acid treatment and proprietary chemicals shall not be used.

2.9.4 Chilled Water System

A shot feeder shall be provided on the chilled water piping as indicated. Size and capacity of feeder shall be based on local requirements and water analysis. The feeder shall be furnished with an air vent, gauge glass, funnel, valves, fittings, and piping.

2.9.5 Condenser Water

The water treatment system shall be capable of automatically feeding chemicals and bleeding the system to prevent corrosion, scale, and biological formations. Automatic chemical feed systems shall automatically feed chemicals into the condenser water based on varying system conditions.

2.9.5.1 Chemical Feed Pump

One pump shall be provided for each chemical feed tank. The chemical feed pumps shall be positive displacement diaphragm type. The flow rate of the pumps shall be adjustable from 0 to 100 percent while in operation. The discharge pressure of pumps shall not be less than 1.5 times the line pressure at the point of connection. The pumps shall be provided with a pressure relief valve and a check valve mounted in the pump discharge.

2.9.5.2 Tanks

Two chemical tanks shall be provided. The tanks shall be constructed of high density polyethylene with a hinged cover. The tanks shall have sufficient capacity to require recharging only once per 7 days during normal operation. A level indicating device shall be included with each

tank. An electric agitator shall be provided for each tank.

2.9.5.3 Injection Assembly

An injection assembly shall be provided at each chemical injection point along the condenser water piping as indicated. The injection assemblies shall be constructed of stainless steel. The discharge of the assemblies shall extend to the centerline of the condenser water piping. Each assembly shall include a shutoff valve and check valve at the point of entrance into the condenser water line.

2.9.5.4 Water Meter

Water meters shall be provided with an electric contacting register and remote accumulative counter. The meter shall be installed within the make-up water line, as indicated.

2.9.5.5 Timers

Timers shall be of the automatic reset, adjustable type, and electrically operated. The timers shall be suitable for a 120 volt current. The timers shall be located within the water treatment control panel.

2.9.5.6 Water Treatment Control Panel

The control panel shall be a NEMA 12 enclosure suitable for surface mounting. The panel shall be constructed of stainless steel with a hinged door and lock. The panel shall contain a laminated plastic nameplate identifying each of the following functions:

(1) Main power switch and indicating light
(2) MAN-OFF-AUTO selector switch
(3) Indicating lamp for bleed-off valve
(4) Indicating lamp for each chemical feed pump
(5) Set point reading for each timer

2.9.5.7 Chemical Piping

The piping and fittings shall be constructed of schedule 80 PVC suitable for the water treatment chemicals.

2.9.5.8 Sequence of Operation

The chemicals shall be added based upon sensing the make-up water flow rate and activating appropriate timers. A separate timer shall be provided for each chemical. The blow down shall be controlled based upon the conductivity level of the condenser water. The injection of the chemical required for biological control shall be controlled by a timer which can be manually set for proper chemical feed. All timer set points, blow down rates, maximum conductivity levels and chemical pump flow rates shall be determined and set by the water treatment company.

2.9.5.9 Test Kits

One test kit of each type required to determine the water quality as outlined within the operation and maintenance manuals shall be provided.

2.9.5.10 Bleed Line

A bleed line with a flow valve of the needle-valve type sized for the flow requirement or fixed orifice shall be provided in the pump return to the tower. The bleed line shall be extended to the nearest drain for continuous discharge.

2.10 PIPING COMPONENTS

2.10.1 Water Piping and Fittings

2.10.1.1 Steel Pipe

Steel pipe shall conform to ASTM A 53, Schedule 40, Type E or S, Grades A or B. Type F pipe shall not be used.

2.10.1.2 Steel Pipe Joints and Fittings

Joints and fittings shall be welded, flanged, threaded, or grooved as indicated. If not otherwise indicated, piping 25 mm (1 inch) and smaller shall be threaded; piping larger than 25 mm (1 inch) and smaller than 80 mm (3 inches) shall be either threaded, grooved, or welded; and piping 80 mm (3 inches) and larger shall be grooved, welded, or flanged. Rigid grooved mechanical joints and fittings may only be used in serviceable aboveground locations where the temperature of the circulating medium does not exceed 110 degrees C. Flexible grooved joints shall be used only as a flexible connector with grooved pipe system. Unless otherwise specified, grooved piping components shall meet the corresponding criteria specified for the similar welded, flanged, or threaded component specified herein. The manufacturer of each fitting shall be permanently identified on the body of the fitting in accordance with MSS SP-25.

a. Welded Joints and Fittings: Welded fittings shall conform to ASTM A 234/A 234M, and identified with the appropriate grade and marking symbol. Butt-welding fittings shall conform to ASME B16.9. Socket-welding and threaded fittings shall conform to ASME B16.11.

b. Flanged Joints and Fittings: Flanges shall conform to ASTM A 181/A181M and ASME B16.5 Class 150. Gaskets shall be nonasbestos compressed material in accordance with ASME B16.21, 1.59 mm (1/16 inch) thickness, full face or self-centering flat ring type. This gaskets shall contain aramid fibers bonded with styrene butadeine rubber (SBR) or nitrile butadeine rubber (NBR). Bolts, nuts, and bolt patterns shall conform to ASME B16.5. Bolts shall be high or intermediate strength material conforming to ASTM A 193/A 193M.

c. Threaded Joints and Fittings: Threads shall conform to ASME B1.20.1. Pipe nipples shall conform to ASTM A 733, type and material to match adjacent piping. Unions shall conform to ASME B16.39, type as required to match adjacent piping.

d. Dielectric Unions and Flanges: Dielectric unions shall have the tensile strength and dimensional requirements specified. Unions shall have metal connections on both ends threaded to match adjacent piping. Metal parts of dielectric unions shall be separated with a nylon insulator to prevent current flow between dissimilar metals. Unions shall be suitable for the required operating pressures and temperatures. Dielectric flanges shall provide the same pressure ratings as standard flanges and provide complete electrical isolation.

e. Grooved Mechanical Joints and Fittings: Joints and fittings shall be designed for not less than 862 kPa (125 psig) service and shall be the product of the same manufacturer. Fitting and coupling houses shall be malleable iron conforming to ASTM A 47, ASTM A 47M, Grade 32510; ductile iron conforming to ASTM A 536, Grade 65-45-12; or steel conforming ASTM A 106, Grade B or ASTM A 53. Gaskets shall be molded synthetic rubber with central cavity, pressure responsive configuration and shall conform to ASTM D 2000 Grade No. 2CA615A15B44F17Z for circulating medium up to 110 degrees C (230 degrees F) or Grade No. M3BA610A15B44Z for circulating medium up to 93 degrees C (200 degrees F). Grooved joints shall conform to AWWA C606. Coupling nuts and bolts shall be steel and shall conform to ASTM A 183.

2.10.1.3 Copper Tube

Copper tubing for water service shall conform to ASTM B 88,ASTM B 88M, Type K or L.

2.10.1.4 Copper Tube Joints and Fittings

Wrought copper and bronze solder-joint pressure fittings shall conform to ASME B16.22 and ASTM B 75M . Cast copper alloy solder-joint pressure fittings shall conform to ASME B16.18. Cast copper alloy fittings for flared copper tube shall conform to ASME B16.26 and ASTM B 62. Brass or bronze adapters for brazed tubing may be used for connecting tubing to flanges and to threaded ends of valves and equipment. Extracted brazed tee joints produced with an acceptable tool and installed as recommended by the manufacturer may be used.

2.10.2 Water Piping Valves and Accessories

Valves shall be rated for Class 125 and shall be suitable for operating temperature of 120 degrees C (250 degrees F). Valves shall be suitable for the working pressure of the pipe in which installed. Valves shall meet the material, fabrication and operating requirements of ASME B31.1. Chain operators shall be provided for valves located 3 m or higher above the floor. Valves in sizes larger than 25 mm (1 inch) and used on steel pipe systems, may be provided with rigid grooved mechanical joint ends. Such grooved end valves shall be subject to the same requirements as rigid grooved mechanical joints and fittings and, shall be provided by the same manufacturer as the grooved pipe joint and fitting system.

2.10.2.1 Gate Valves

Gate valves 65 mm (2-1/2 inches) and smaller shall conform to MSS SP-80 and shall be bronze with rising stem and threaded, soldered, or flanged ends. Gate valves 80 mm (3 inches) and larger shall conform to MSS SP-70, Type I, II, Class 125, Design OF and shall be cast iron with bronze trim, outside screw and yoke, and flanged or threaded ends.

2.10.2.2 Globe and Angle Valves

Globe and angle valves 65 mm (2-1/2 inches) and smaller shall conform to MSS SP-80 and shall be bronze with threaded, soldered, or flanged ends. Globe and angle valves 80 mm (3 inches) and larger shall conform to MSS SP-85 and shall be cast iron with bronze trim and flanged or threaded ends.

2.10.2.3 Check Valves

Check valves 65 mm (2-1/2 inches) and smaller shall conform to MSS SP-80 and shall be bronze with threaded, soldered, or flanged ends. Check valves 80 mm (3 inches) and larger shall conform to MSS SP-71, Type I, II, III, or IV, Class 125 or 150 and shall be cast iron with bronze trim and flanged or threaded ends.

2.10.2.4 Butterfly Valves

Butterfly valves shall be in accordance with MSS SP-67, Type 1 and shall be 2 flange or lug wafer type, and shall be bubble tight at 1,000 kPa (150 psig). Valve bodies shall be cast iron, malleable iron, or steel. Valves smaller than 200 mm (8 inches) shall have throttling handles with a minimum of seven locking positions. Valves 200 mm (8 inches) and larger shall have totally enclosed manual gear operators with adjustable balance return stops and position indicators. Valves in insulated lines shall have extended neck to accommodate insulation thickness.

2.10.2.5 Plug Valves

Plug valves 50 mm (2 inches) and larger shall conform to MSS SP-78, have flanged or threaded ends, and have cast iron bodies with bronze trim. Valves 50 mm (2 inches) and smaller shall be bronze with NPT connections for black steel pipe and brazed connections for copper tubing. Valves shall be lubricated, non-lubricated, or tetrafluoroethylene resin-coated type. Valves shall be resilient, double seated, trunnion mounted with tapered lift plug capable of 2-way shutoff. Valves shall operate from fully open to fully closed by rotation of the handwheel to lift and turn the plug. Valves shall a weatherproof operators with mechanical position indicators. Valves 200 mm (8 inches) or larger shall be provided with manual gear operators with position indicators.

2.10.2.6 Ball Valves

Ball valves 15 mm (1/2 inch) and larger shall conform to MSS SP-72 or MSS SP-110 and shall be ductile iron or bronze with threaded, soldered, or flanged ends. Valves 200 mm (8 inches) or larger shall be provided with manual gear operators with position indicators.

2.10.2.7 Calibrated Balancing Valves

Each valve shall be calibrated so that flow can be determined when the temperature and pressure differential across valve is known. Valves shall have an integral pointer which registers the degree of valve opening. Each valve shall be constructed with internal seals to prevent leakage and shall be supplied with preformed insulation. Valves Cv rating shall be as indicated. Valve bodies shall be provided with tapped openings and pipe extensions with positive shutoff valves outside of pipe insulation. The pipe extensions shall be provided with quick connecting hose fittings for a portable meter to measure the pressure differential. One portable differential meter, suitable for the operating pressure specified, shall be provided. The meter shall be complete with hoses, vent, integral metering connections, and carrying case as recommended by the valve manufacturer. In lieu of the balancing valve with integral metering connections, a ball valve or plug valve with a separately installed orifice plate or venturi tube may be used for balancing.

2.10.2.8 Automatic Flow Control Valves

Valves shall automatically maintain a constant flow as indicated. Valves shall modulate by sensing the pressure differential across the valve body. Valves shall be selected for the flow required and provided with a permanent nameplate or tag carrying a permanent record of the factory-determined flow rate and flow control pressure levels. Valves shall control the flow within 5 percent of the tag rating. Valve materials shall be the same as specified for the ball or plug valves. Valve Cv rating shall be as indicated. Valve operators shall be the electric type as indicated. Valves shall be capable of positive shutoff against the system pump head, valve bodies shall be provided with tapped openings and pipe extensions with shutoff valves outside of pipe insulation. The pipe extensions shall be provided with quick connecting hose fittings and differential meter, suitable for the operating pressure specified. The meter shall be complete with hoses, vent, integral metering connections, and carrying case as recommended by the valve manufacturer.

2.10.2.9 Air Vents

Manual air vents shall be brass or bronze valves or cocks suitable for 862 kpa (125 psig) service, and furnished with threaded plugs or caps. Automatic air vents shall be float type, cast iron, stainless steel, or forged steel construction, suitable for 862 kpa (125 psig) service.

2.10.2.10 Strainers

Strainers shall be in accordance with ASTM F 1199, except as modified herein. Strainer shall be the cleanable, basket or "Y" type, the same size as the pipeline. The strainer bodies shall be fabricated of cast iron with bottoms drilled, and tapped. The bodies shall have arrows clearly cast on the sides indicating the direction of flow. Each strainer shall be equipped with removable cover and sediment screen. The screen shall be made of minimum 0.8 mm (22 gauge) corrosion-resistant steel, with small perforations numbering not less than 60 per square centimeter (400 per square inch) to provide a net free area through the basket of at least 3.30 times that of the entering pipe. The flow shall be into the screen and out through the perforations.

2.10.2.11 Combination Strainer and Suction Diffuser

A combination strainer and suction diffuser, consisting of an angle type body with removable strainer basket and straightening vanes, a suction pipe support, and a blowdown outlet, shall be provided on pump suction. The combination strainer and suction diffuser shall be in accordance with ASTM F 1199, except as modified herein.

2.10.2.12 Pump Discharge Valves

Pump discharge valves shall be installed where indicated and shall perform the functions of a nonslam check valve, a manual balancing valve, and a shutoff. Valves shall be of cast iron or ductile iron construction with bronze and/or stainless steel accessories. Valves shall have an integral pointer which registers the degree of valve opening. Flow through the valve shall be manually adjustable from bubble tight shutoff to full flow. Valves smaller than 50 mm (2 inches) shall have NPT connections. Valves 50 mm (2 inches) and larger shall have flanged or grooved end connections. The valve design shall allow the back seat for the stem to be replaced in the field under full line pressure. Valve Cv rating shall be as indicated.

2.10.2.13 Flexible Pipe Connectors

Flexible pipe connectors shall be designed for 1034 kPa (150 psig) service as appropriate for the static head plus the system head, and 110 degrees C (230 degrees F), for grooved end flexible connectors. The flexible section shall be constructed of rubber, tetrafluoroethylene resin, or corrosion-resisting steel, bronze, monel, or galvanized steel. The flexible section shall be suitable for intended service with end connections to match adjacent piping. Flanged assemblies shall be equipped with limit bolts to restrict maximum travel to the manufacturer's standard limits. Unless otherwise indicated, the length of the flexible connectors shall be as recommended by the manufacturer for the service intended. Internal sleeves or liners, compatible with circulating medium, shall be provided when recommended by the manufacturer. Covers to protect the bellows shall be provided where indicated.

2.10.2.14 Pressure Gauges

Gauges shall conform to ASME B40.1 and shall be provided with throttling type needle valve or a pulsation dampener and shut-off valve. Gauge shall be a minimum of 85 mm in diameter with a range from 0 kPa (0 psig) to approximately 1.5 times the maximum system working pressure.

2.10.2.15 Thermometers

Thermometers shall have brass, malleable iron, or aluminum alloy case and frame, clear protective face, permanently stabilized glass tube with indicating-fluid column, white face, black numbers, and a 225 mm (9 inch) scale. Thermometers shall have rigid stems with straight, angular, or inclined pattern.

2.10.2.16 Pipe Nipples

Pipe nipples shall be in accordance with ASTM A 733 and be of material to match adjacent piping.

2.10.2.17 Pipe Unions

Pipe unions shall be in accordance with ASME B16.39 and be of material to match adjacent piping.

2.10.2.18 Solder

Solder for water piping shall be in accordance with ASTM B 32, alloy grade 50B. Solder flux shall be liquid or paste form, non-corrosive and conform to ASTM B 813.

2.10.3 Expansion Joints

2.10.3.1 Slip-Tube Joints

Expansion joints shall provide for either single or double slip of the connected pipes, as required or indicated, and for not less than the traverse indicated. The joints shall be designed for working temperature and pressure suitable for the application, but not less than 1034 kPa (150 psig), and shall be in accordance with applicable requirements of EJMA Stds and ASME B31.1. End connections shall be flanged or beveled for welding as indicated. Joints shall be provided with an anchor base where required or indicated. Where adjoining pipe is carbon steel, the sliding slip shall

be seamless steel plated with a minimum of 0.12 mm of hard chrome in accordance with ASTM B 650. All joint components shall be suitable for the intended service. Initial settings shall be made in accordance with the manufacturer's recommendations to compensate for ambient temperature at time of installation. Pipe alignment guides shall be installed as recommended by the joint manufacturer. Pipe alignment guides shall in no case be more than 1.5 m from expansion joints except for pipe 100 mm (4 inches) or smaller. Pipe alignment guides on pipe 100 mm (4 inches) or smaller shall be installed not more than 600 mm from expansion joints. Service outlets shall be provided where indicated.

2.10.3.2 Flexible Ball Joints

Flexible ball joints shall be constructed of alloys as appropriate for the service intended. Where so indicated, the ball joint shall be designed for packing injection under full line pressure to contain leakage. The joint ends shall be threaded to 50 mm (2 inches) only, grooved, flanged, or beveled for welding as indicated or required and shall be capable of absorbing a minimum of 15 degree angular flex and 360 degree rotation. Ball and sockets shall be suitable for the intended service. The exterior spherical surface of carbon steel balls shall be plated with minimum 0.12 mm of hard chrome in accordance with EJMA Stds and ASME B31.1 where applicable. Where required, flanges shall conform to ASME B16.5.

2.10.3.3 Bellows Type Joints

Bellows type joints shall be flexible, guided expansion joints. The expansion element shall be stabilized corrosion resistant steel. Bellows type expansion joints shall conform to the applicable requirements of EJMA Stds and ASME B31.1 with internal sleeves. Guiding of piping on both sides of expansion joint shall be in accordance with the published recommendations of the manufacturer of the expansion joint. The joints shall be designed for the working temperature and pressure suitable for the application but not less than 1034 kPa (150 psig).

2.10.4 Escutcheons

Escutcheons shall be chromium-plated iron or chromium-plated brass, either one piece or split pattern, held in place by internal spring tension or set screws.

2.10.5 Pipe Hangers, Inserts, and Supports

Pipe hangers, inserts, and supports shall conform to MSS SP-58 and MSS SP-69.

2.11 FABRICATION

2.11.1 Factory Coating

Unless otherwise specified, equipment and component items, when fabricated from ferrous metal, shall be factory finished with the manufacturer's standard finish, except that items located outside of buildings shall have weather resistant finishes that will withstand 500 hours exposure to the salt spray test specified in ASTM B 117 using a 5 percent sodium chloride solution. Immediately after completion of the test, the specimen shall show no signs of blistering, wrinkling, cracking, or loss of adhesion and no sign of rust creepage beyond 3 mm on either side of the scratch mark. Cut edges of galvanized surfaces where hot-dip galvanized sheet steel is used shall be coated with a zinc-rich coating conforming to ASTM D 520,

Type I.

2.11.2 Field Painting

Painting required for surfaces not otherwise specified, and finish painting of items only primed at the factory are specified in Section 09900 PAINTING, GENERAL.

2.11.2.1 Color Coding

Color coding for piping identification is specified in Section 09900 PAINTING, GENERAL.

2.12 FACTORY TESTS

2.12.1 Chiller Performance Test

The Contractor and proposed chiller manufacturer shall be responsible for performing the chiller factory test to validate the specified full load capacity, full load EER, and IPLV in accordance with ARI 550 except as indicated. The chiller factory test shall be performed in the presence of a Government representative. The Contractor and chiller manufacturer shall provide to the Government a certified chiller factory test report in accordance with ARI 550 to confirm that the chiller performs as specified. All tests shall be conducted in an ARI certified test facility in conformance with ARI 550 procedures and tolerances, except as indicated. At a minimum, chiller capacity shall be validated to meet the scheduled requirements indicated on the drawings. Tolerance or deviation shall be in strict accordance with ARI 550.Stable operation at minimum load of 10 percent of total capacity shall be demonstrated during the factory test.

a. Temperature adjustments shall adhere to ARI 550 to adjust from the design fouling factor to the clean tube condition. Test temperature adjustments shall be verified prior to testing by the manufacturer. There shall be no exceptions to conducting the test with clean tubes with the temperature adjustments per section A7.3 of ARI 550. The manufacturer shall clean the tubes, if necessary, prior to testing to obtain a test fouling factor of 0.0000.

b. The factory test instrumentation shall be per ARI 550 and the calibration shall be traceable to the National Institute of Standards and Technology.

c. A certified test report of all data shall be forwarded to the Government for approval prior to project acceptance. All calibration curves and information sheets for all instrumentation shall be provided.

d. If the equipment fails to perform within allowable tolerances, the manufacturer shall be allowed to make necessary revisions to his equipment and retest as required. The manufacturer shall assume all expenses incurred by the Government to witness the retest.

2.12.2 Chiller Sound Test

All centrifugal chillers shall be sound tested at the factory prior to shipment to confirm the sound pressure level specified below. All tests and data shall be conducted and measured in strict accordance with ARI 575. The centrifugal chiller sound pressure level, in decibels (dB), with a

reference pressure of 20 micropascals, shall not exceed 85 dB, A weighted, at full load. All ratings shall be in accordance with ARI 575. No reduction of entering condenser water temperature or raising of leaving chilled water temperature shall be allowed. A minimum of 75 percent of the sound data points shall be taken along the length of the machine, and established as the minimum percentage of total possible points used to determine sound levels. In the event that the chiller does not meet the dBA sound pressure level, the manufacturer shall, at his expense, provide sufficient attenuation to the machine to meet the specified value. This attenuation shall be applied in such a manner that it does not hinder the operation or routine maintenance procedures of the chiller. The attenuation material, adhesives, coatings, and other accessories shall have surface burning characteristics as determined by ASTM E 84.

2.13 SUPPLEMENTAL COMPONENTS/SERVICES

2.13.1 Drain and Makeup Water Piping

Piping and backflow preventers shall comply with the requirements of Section 15400 PLUMBING, GENERAL PURPOSE. Drains which connect to sanitary sewer system shall be connected by means of an indirect waste.

PART 3 EXECUTION

3.1 INSTALLATION

All work shall be performed in accordance with the manufacturer's published diagrams, recommendations, and equipment warranty requirements. Where equipment is specified to conform to the requirements of ASME BPV VIII Div 1 and ASME BPV IX, the design, fabrication, and installation of the system shall conform to ASME BPV VIII Div 1 and ASME BPV IX.

3.1.1 Refrigeration System

3.1.1.1 Equipment

Necessary supports shall be provided for all equipment, appurtenances, and pipe as required, including frames or supports for compressors, pumps, cooling towers, condensers, liquid coolers, and similar items. Compressors shall be isolated from the building structure. If mechanical vibration isolators are not provided, vibration absorbing foundations shall be provided. Each foundation shall include isolation units consisting of machine and floor or foundation fastenings, together with intermediate isolation material. Other floor-mounted equipment shall be set on not less than a 150 mm concrete pad doweled in place. Concrete foundations for floor mounted pumps shall have a mass equivalent to three times the weight of the components, pump, base plate, and motor to be supported. In lieu of concrete pad foundation, concrete pedestal block with isolators placed between the pedestal block and the floor may be provided. Concrete pedestal block shall be of mass not less than three times the combined pump, motor, and base weights. Isolators shall be selected and sized based on load-bearing requirements and the lowest frequency of vibration to be isolated. Isolators shall limit vibration to 30 percent at lowest equipment rpm. Lines connected to pumps mounted on pedestal blocks shall be provided with flexible connectors. Foundation drawings, bolt-setting information, and foundation bolts shall be furnished prior to concrete foundation construction for all equipment indicated or required to have concrete foundations. Concrete for foundations and concrete-structured or cased-cooling towers shall be as specified in Section 03300 CAST-IN-PLACE

STRUCTURAL CONCRETE. Equipment shall be properly leveled, aligned, and secured in place in accordance with manufacturer's instructions.

3.1.1.2 Refrigerant Charging

a. Initial Charge: Upon completion of all the refrigerant pipe tests, the vacuum on the system shall be broken by adding the required charge of dry refrigerant for which the system is designed, in accordance with the manufacturer's recommendations. Contractor shall provide the complete charge of refrigerant in accordance with manufacturer's recommendations. Upon satisfactory completion of the system performance tests, any refrigerant that has been lost from the system shall be replaced. After the system is fully operational, service valve seal caps and blanks over gauge points shall be installed and tightened.

b. Refrigerant Leakage: If a refrigerant leak is discovered after the system has been charged, the leaking portion of the system shall immediately be isolated from the remainder of the system and the refrigerant shall be pumped into the system receiver or other suitable container. The refrigerant shall not be discharged into the atmosphere.

c. Contractor's Responsibility: The Contractor shall, at all times during the installation and testing of the refrigeration system, take steps to prevent the release of refrigerants into the atmosphere. The steps shall include, but not be limited to, procedures which will minimize the release of refrigerants to the atmosphere and the use of refrigerant recovery devices to remove refrigerant from the system and store the refrigerant for reuse or reclaim. At no time shall more than 85 g of refrigerant be released to the atmosphere in any one occurrence. Any system leaks within the first year shall be repaired in accordance with the specified requirements including material, labor, and refrigerant if the leak is the result of defective equipment, material, or installation.

3.1.1.3 Oil Charging

Except for factory sealed units, two complete charges of lubricating oil for each compressor crankcase shall be furnished. One charge shall be used during the performance testing period, and upon the satisfactory completion of the tests, the oil shall be drained and replaced with the second charge.

3.1.1.4 Automatic Controls

Automatic controls for the central refrigeration system specified in paragraph REFRIGERATION SYSTEM shall be provided with the central refrigeration equipment. These controls shall operate automatically to balance the equipment capacity with the load on the air conditioning system, and shall be fully coordinated with and integrated into the temperature control system specified in Section 15895 AIR SUPPLY, DISTRIBUTION, VENTILATION, AND EXHAUST SYSTEM and 15951 DIRECT DIGITAL CONTROL FOR HVAC.

3.1.2 General Piping Installation

3.1.2.1 Brazed Joints

Before brazing copper joints, both the outside of the tube and the inside of the fitting shall be cleaned with a wire fitting brush until the entire joint surface is bright and clean. Brazing flux shall not be used. Surplus brazing material shall be removed at all joints. Steel tubing joints shall be made in accordance with the manufacturer's recommendations. Joints in steel tubing shall be painted with the same material as the baked-on coating within 8 hours after joints are made. Tubing shall be protected against oxidation during brazing by continuous purging of the inside of the piping using nitrogen. All piping shall be supported prior to brazing and shall not be sprung or forced.

3.1.2.2 Threaded Joints

Threaded joints shall be made with tapered threads and made tight with PTFE tape complying with ASTM D 3308 or equivalent thread-joint compound applied to the male threads only. Not more than three threads shall show after the joint is made.

3.1.2.3 Welded Joints

Welding shall be in accordance with qualified procedures using qualified welders and welding operators. Procedures and welders shall be qualified in accordance with ASME BPV IX. Welding procedures qualified by others, and welders and welding operators qualified by another employer may be accepted as permitted by ASME B31.1. Contracting Officer shall be notified 24 hours in advance of welding tests and the tests shall be performed at the work site if practical. A permanent mark shall be applied near each weld to identify the welder who made that weld. Structural members shall be welded in accordance with Section 05055 WELDING, STRUCTURAL.Changes in direction of piping shall be made with welded fittings only; mitering or notching pipe or other similar construction to form elbows or tees will not be permitted. Branch connections shall be made with welding tees or forged welding branch outlets. Steel pipe shall be thoroughly cleaned of all scale and foreign matter before the piping is assembled. During welding the pipe and fittings shall be filled with an inert gas, such as nitrogen, to prevent the formation of scale. Beveling, alignment, heat treatment, and inspection of weld shall conform to ASME B31.1. Weld defects shall be removed and rewelded at no additional cost to the Government. Electrodes shall be stored and dried in accordance with AWS D1.1 or as recommended by the manufacturer. Electrodes that have been wetted or that have lost any of their coating shall not be used.

3.1.2.4 Flanged Joints

Flanged joints shall be faced true, provided with gaskets suitable for use with refrigerants and made square and tight. When steel refrigerant piping is used, union or flange joints shall be provided in each line immediately preceding the connection to each piece of equipment requiring maintenance, such as compressors, coils, chillers, control valves, and other similar items.

3.1.2.5 Flared Connections

When flared connections are used, a suitable lubricant shall be used between the back of the flare and the nut in order to avoid tearing the flare while tightening the nut.

3.1.2.6 Thermometers

Thermometers shall be located specifically on, but not limited to the following: condenser water lines entering and leaving the condenser, the sensing element of each automatic temperature control device where a thermometer is not an integral part thereof, the inlet and outlet lines at each evaporator or liquid cooler.

3.1.2.7 Supports

a. General: All refrigerant pipe supports shall be in accordance with ASME B31.5. Hangers used to support piping 50 mm (2 inches) and larger shall be fabricated to permit adequate adjustment after erection while still supporting the load. Pipe guides and anchors shall be installed to keep pipes in accurate alignment, to direct the expansion movement, and to prevent buckling, swaying, and undue strain. Piping subjected to vertical movement, when operating temperatures exceed ambient temperatures, shall be supported by variable spring hangers and supports or by constant support hangers.

b. Seismic Requirements: All piping and attached valves shall be supported and braced to resist seismic loads as specified under Sections 13080 SEISMIC PROTECTION FOR MECHANICAL, ELECTRICAL EQUIPMENT and 15070 SEISMIC PROTECTION FOR MECHANICAL EQUIPMENT as shown on the drawings. Structural steel required for reinforcement to properly support piping, headers, and equipment but not shown shall be provided under this section. Material used for support shall be as specified under Section 05120 STRUCTURAL STEEL.

c. Structural Attachments: Structural steel brackets required to support piping, headers, and equipment, but not shown, shall be provided under this section. Material and installation shall be as specified under Section 05120 STRUCTURAL STEEL.

3.1.2.8 Pipe Hangers, Inserts, and Supports

Pipe hangers, inserts, and supports shall conform to MSS SP-58 and MSS SP-69, except as modified herein. Pipe hanger types 5, 12, and 26 shall not be used.

a. Hangers: Type 3 shall not be used on insulated piping.

b. Inserts: Type 18 inserts shall be secured to concrete forms before concrete is placed. Continuous inserts which allow more adjustments may be used if they otherwise meet the requirements for Type 18 inserts.

c. C-Clamps: Type 19 and 23 C-clamps shall be torqued per MSS SP-69 and have both locknuts and retaining devices, furnished by the manufacturer. Field-fabricated C-clamp bodies or retaining devices are not acceptable.

d. Angle Attachments: Type 20 attachments used on angles and channels shall be furnished with an added malleable-iron heel plate or adapter.

e. Hangers: Type 24 may be used only on trapeze hanger systems or on fabricated frames.

f. Saddles and Shields: Where Type 39 saddle or Type 40 shield are permitted for a particular pipe attachment application, the Type 39 saddle, connected to the pipe, shall be used on all pipe 100 mm (4 inches) and larger when the temperature of the medium is 16 degrees C or higher. Type 40 shields shall be used on all piping less than 100 mm (4 inches) and all piping 100 mm (4 inches) and larger carrying medium less than 16 degrees C. A high density insulation insert of cellular glass shall be used under the Type 40 shield for piping 50 mm (2 inches) and larger.

g. Horizontal Pipe Supports: Horizontal pipe supports shall be spaced as specified in MSS SP-69 and a support shall be installed not over 300 mm from the pipe fitting joint at each change in direction of the piping. Pipe supports shall be spaced not over 1.5 m apart at valves. Pipe hanger loads suspended from steel joist with hanger loads between panel points in excess of 22 kg shall have the excess hanger loads suspended from panel points.

h. Vertical Pipe Supports: Vertical pipe shall be supported at each floor, except at slab-on-grade, and at intervals of not more than 4.5 m, not more than 2.4 m from end of risers, and at vent terminations.

i. Pipe Guides: Type 35 guides using, steel, reinforced polytetrafluoroethylene (PTFE) or graphite slides shall be provided where required to allow longitudinal pipe movement. Lateral restraints shall be provided as required. Slide materials shall be suitable for the system operating temperatures, atmospheric conditions, and bearing loads encountered.

j. Steel Slides: Where steel slides do not require provisions for restraint of lateral movement, an alternate guide method may be used. On piping 100 mm (4 inches) and larger, a Type 39 saddle shall be used. On piping under 100 mm (4 inches), a Type 40 protection shield may be attached to the pipe or insulation and freely rest on a steel slide plate.

k. Multiple Pipe Runs: In the support of multiple pipe runs on a common base member, a clip or clamp shall be used where each pipe crosses the base support member. Spacing of the base support members shall not exceed the hanger and support spacing required for an individual pipe in the multiple pipe run.

3.1.2.9 Pipe Alignment Guides

Pipe alignment guides shall be provided where indicated for expansion loops, offsets, and bends and as recommended by the manufacturer for expansion joints, not to exceed 1.5 m on each side of each expansion joint, and in lines 100 mm (4 inches) or smaller not more than 600 mm on each side of the joint.

3.1.2.10 Anchors

Anchors shall be provided wherever necessary or indicated to localize expansion or to prevent undue strain on piping. Anchors shall consist of heavy steel collars with lugs and bolts for clamping and attaching anchor braces, unless otherwise indicated. Anchor braces shall be installed in the most effective manner to secure the desired results using turnbuckles where required. Supports, anchors, or stays shall not be attached where

they will injure the structure or adjacent construction during installation or by the weight of expansion of the pipeline. Detailed drawings of pipe anchors shall be submitted for approval before installation.

3.1.2.11 Pipe Sleeves

Sleeves shall not be installed in structural members except where indicated or approved. Rectangular and square openings shall be as detailed. Each sleeve shall extend through its respective wall, floor, or roof, and shall be cut flush with each surface. Pipes passing through concrete or masonry wall or concrete floors or roofs shall be provided with pipe sleeves fitted into place at the time of construction. Unless otherwise indicated, sleeves shall be of such size as to provide a minimum of 6 mm all-around clearance between bare pipe and sleeves or between jacketed-insulation and sleeves. Sleeves in bearing walls, waterproofing membrane floors, and wet areas shall be steel pipe or cast iron pipe. Sleeves in non-bearing walls, floors, or ceilings may be steel pipe, cast iron pipe, galvanized sheet metal with lock-type longitudinal seam and of the metal thickness indicated, or moisture resistant fiber or plastic. Except in pipe chases or interior walls, the annular space between pipe and sleeve or between jacket over-insulation and sleeve shall be sealed as indicated and specified in Section 07900 JOINT SEALING. Pipes passing through wall waterproofing membrane shall be sleeved as specified above, and a waterproofing clamping flange shall be installed.

a. Roof and Floor Penetrations: Pipes passing through roof or floor waterproofing membrane shall be installed through a 5.17 kg/sq. m. (17 ounce) copper sleeve, or a 0.81 mm (0.032 inch) thick aluminum sleeve, each within an integral skirt or flange. Flashing sleeve shall be suitably formed, and skirt or flange shall extend not less than 200 mm from the pipe and shall be set over the roof or floor membrane in a troweled coating of bituminous cement. The flashing sleeve shall extend up the pipe a minimum of 50 mm above highest floor level of the roof or a minimum of 250 mm above the roof, whichever is greater, or 250 mm above the floor. The annular space between the flashing sleeve and the bare pipe or between the flashing sleeve and the metal-jacket-covered insulation shall be sealed as indicated. Pipes up to and including 250 mm (10 inches) in diameter passing through roof or floor waterproofing membrane may be installed through a cast iron sleeve with caulking recess, anchor lugs, flashing clamp device, and pressure ring with brass bolts. Waterproofing membrane shall be clamped into place and sealant shall be placed in the caulking recess. In lieu of a waterproofing clamping flange and caulking and sealing of annular space between pipe and sleeve or conduit and sleeve, a modular mechanical type sealing assembly may be installed. Seals shall consist of interlocking synthetic rubber links shaped to continuously fill the annular space between the pipe/conduit and sleeve with corrosion protected carbon steel bolts, nuts, and pressure plates. Links shall be loosely assembled with bolts to form a continuous rubber belt around the pipe with a pressure plate under each bolt head and each nut. After the seal assembly is properly positioned in the sleeve, tightening of the bolt shall cause the rubber sealing elements to expand and provide a watertight seal between the pipe/conduit seal between the pipe/conduit and the sleeve. Each seal assembly shall be sized as recommended by the manufacturer to fit the pipe/conduit and sleeve involved. The Contractor electing to use the modular mechanical

type seals shall provide sleeves of the proper diameters.

b. Fire-Rated Walls and Partitions: Penetration of fire-rated walls and partitions shall be sealed as specified in Section 07840 FIRESTOPPING.

3.1.2.12 Escutcheons

Finished surfaces where exposed piping, bare or insulated, pass through floors, walls, or ceilings, except in boiler, utility, or equipment rooms, shall be provided with escutcheons. Where sleeves project slightly from floors, special deep-type escutcheons shall be used. Escutcheon shall be secured to pipe or pipe covering.

3.1.2.13 Access Panels

Access panels shall be provided for all concealed valves, vents, controls, and items requiring inspection or maintenance. Access panels shall be of sufficient size and located so that the concealed items may be serviced and maintained or completely removed and replaced. Access panels shall be as specified in Section 05500 MISCELLANEOUS METALS.

3.1.3 Water Piping

Pipe and fitting installation shall conform to the requirements of ASME B31.1. Pipe shall be cut accurately to measurements established at the jobsite, and worked into place without springing or forcing, completely clearing all windows, doors, and other openings. Cutting or other weakening of the building structure to facilitate piping installation will not be permitted without written approval. Pipe or tubing shall be cut square, shall have burrs removed by reaming, and shall permit free expansion and contraction without causing damage to the building structure, pipe, joints, or hangers.

3.1.3.1 Directional Changes

Changes in direction shall be made with fittings, except that bending of pipe 100 mm (4 inches) and smaller will be permitted, provided a pipe bender is used and wide weep bends are formed. The centerline radius of bends shall not be less than 6 diameters of the pipe. Bent pipe showing kinks, wrinkles, flattening, or other malformations will not be accepted.

3.1.3.2 Functional Requirements

Horizontal supply mains shall pitch down in the direction of flow as indicated. The grade shall not be less than 2 mm in 1 m. Reducing fittings shall be used for changes in pipe sizes. Open ends of pipelines and equipment shall be capped or plugged during installation to keep dirt or other foreign materials out of the system. Pipe not otherwise specified shall be uncoated. Connections to appliances shall be made with malleable iron unions for steel pipe 65 mm (2-1/2 inches) or less in diameter, and with flanges for pipe 80 mm (3 inches) and above in diameter. Connections between ferrous and copper piping shall be electrically isolated from each other with dielectric unions or flanges. All piping located in air plenums shall conform to NFPA 90A requirements. Pipe and fittings installed in inaccessible conduits or trenches under concrete floor slabs shall be welded.

3.1.3.3 Valves

Isolation gate or ball valves shall be installed on each side of each piece of equipment, at the midpoint of all looped mains, and at any other points indicated or required for draining, isolating, or sectionalizing purpose. Isolation valves may be omitted where balancing cocks are installed to provide both balancing and isolation functions. Each valve except check valves shall be identified. Valves in horizontal lines shall be installed with stems horizontal or above.

3.1.3.4 Air Vents

Air vents shall be provided at all high points, on all water coils, and where indicated to ensure adequate venting of the piping system.

3.1.3.5 Drains

Drains shall be provided at all low points and where indicated to ensure complete drainage of the piping. Drains shall be accessible, and shall consist of nipples and caps or plugged tees unless otherwise indicated.

3.1.3.6 Flexible Pipe Connectors

Preinsulated flexible pipe connectors shall be attached to other components in strict accordance with the latest printed instructions of the manufacturer to ensure a vapor tight joint. Hangers, when required to suspend the connectors, shall be of the type recommended by the flexible pipe connector manufacturer and shall be provided at the intervals recommended.

3.1.3.7 Flanges and Unions

Except where copper tubing is used, union or flanged joints shall be provided in each line immediately preceding the connection to each piece of equipment or material requiring maintenance such as coils, pumps, control valves, and other similar items.

3.1.3.8 Grooved Mechanical Joints

Grooves shall be prepared in accordance with the coupling manufacturer's instructions. Pipe and groove dimensions shall comply with the tolerances specified by the coupling manufacturer. The diameter of grooves made in the field shall be measured using a "go/no-go" gauge, vernier or dial caliper, or narrow-land micrometer. Groove width and dimension of groove from end of pipe shall be measured and recorded for each change in grooving tool setup to verify compliance with coupling manufacturer's tolerances.

3.1.4 Mechanical Room Ventilation

Mechanical room ventilation systems shall be in accordance with ASHRAE Std 15 and Section 15895 AIR SUPPLY, DISTRIBUTION, VENTILATION, AND EXHAUST SYSTEM. Provide two self contained breathing apparatus for the mechanical room in accordance with ASHRAE Std 15.

3.1.5 Field Applied Insulation

Field applied insulation other than that specified for water boxes and headers shall be as specified in Section 15080 THERMAL INSULATION FOR MECHANICAL SYSTEMS.

3.1.6 Factory Applied Insulation

3.1.6.1 Refrigerant Suction Lines

Refrigerant suction lines between the cooler and each compressor and cold gas inlet connections to gas cooled motors shall be insulated with not less than 19 mm (3/4 inch) thick unicellular plastic foam.

3.1.6.2 Liquid Coolers

Liquid coolers (including chilled water headers or boxes), which may have factory or field applied insulation, shall be insulated with unicellular plastic foam. Insulation shall be not less than 19 mm (3/4 inch) thick or have a maximum thermal conductivity of 1.59 W/((sq. m)(degree K) (0.28 Btu/((hr.)(sq. ft.)(degree F.))). In lieu of the above insulation, a 50 mm thickness of urethane foam may be used. Urethane foam shall be completely covered and sealed with a sheet metal jacket not lighter than 1.0 mm (20 gauge). Insulation on heads of coolers shall be constructed to provide easy removal and replacement of heads without damage to the insulation.

3.2 TESTS

3.2.1 Field Tests

Tests shall be conducted in the presence of the Contracting Officer. Water and electricity required for the tests will be furnished by the Government. Any material, equipment, instruments, and personnel required for the test shall be provided by the Contractor. The services of a qualified technician shall be provided as required to perform all tests and procedures indicated herein. Field tests shall be coordinated with Section 15990 TESTING, ADJUSTING, AND BALANCING OF HVAC SYSTEMS.

3.2.1.1 Water Pipe Testing

After cleaning, water piping shall be hydrostatically tested at a pressure equal to 150 percent of the total system operating pressure for period of time sufficient to inspect every joint in the system and in no case less than 2 hours. Leaks shall be repaired and piping retested until test is successful. No loss of pressure shall be allowed. Leaks shall be repaired by rewelding or replacing pipe or fittings. Caulking of joints will not be permitted. Concealed and insulated piping shall be tested in place before concealing.

3.2.1.2 Test of Backflow Prevention Assemblies

Backflow prevention assemblies shall be tested in accordance with Section 15400 PLUMBING, GENERAL PURPOSE.

3.2.1.3 Cooling Tower Tests

After cooling tower has been found acceptable under the visual and dimensional examination, a field performance test shall be performed in accordance with ASME PTC 23 or CTI ATC-105. The electromagnetic interference suppression test and the salt spray test is not required. The cooling tower test shall be performed in the presence of a Government representative.

3.2.2 System Performance Tests

After the foregoing tests have been completed and before each refrigeration system is accepted, tests to demonstrate the general operating characteristics of all equipment shall be conducted by a registered professional engineer or an approved manufacturer's startup representative experienced in system startup and testing, at such times as directed. Tests shall cover a period of not less than 30 days for each system and shall demonstrate that the entire system is functioning in accordance with the drawings and specifications. Corrections and adjustments shall be made as necessary and tests shall be re-conducted to demonstrate that the entire system is functioning as specified.

3.2.3 Condenser Water Quality Tests

The condenser water shall be analyzed a minimum of once a month for a period of one year by the water treatment company. The analysis shall include the following information recorded in accordance with ASTM D 596.

Date of Sample	_____	
Temperature	_____	degrees C.
Silica (SiO2)	_____	ppm (mg/1)
Insoluble	_____	ppm (mg/1)
Iron and Aluminum Oxides	_____	ppm (mg/1)
Calcium (Ca)	_____	ppm (mg/1)
Magnesium (Mg)	_____	ppm (mg/1)
Sodium and Potassium (Na and K)	_____	ppm (mg/1)
Carbonate (HCO3)	_____	ppm (mg/1)
Sulfate (SO4)	_____	ppm (mg/1)
Chloride (Cl)	_____	ppm (mg/1)
Nitrate (NO3)	_____	ppm (mg/1)
Turbidity	_____	unit
pH	_____	
Residual Chlorine	_____	ppm (mg/1)
Total Alkalinity	_____	epm (meq/1)
Non-Carbonate Hardness	_____	epm (meq/1)
Total Hardness	_____	epm (meq/1)
Dissolved Solids	_____	ppm (mg/1)
Fluorine	_____	ppm (mg/1)
Conductivity	_____	micrmho/cm

3.3 INSPECTIONS

At the conclusion of the one year period, the cooling tower and condenser shall be inspected for problems due to corrosion, scale, and biological growth. If the cooling tower and condenser are found not to conform to the manufacturers recommended conditions, and the water treatment company recommendations have been followed; the water treatment company shall provide all chemicals and labor for cleaning or repairing the equipment as required by the manufacturer's recommendations.

3.4 MANUFACTURER'S FIELD SERVICE

The services of a factory-trained representative shall be provided for 5 days. The representative shall advise on the following:

a. Hermetic machines:

(1) Testing hermetic water-chilling unit under pressure for refrigerant leaks; evacuation and dehydration of machine to an absolute pressure of not over 300 microns.

(2) Charging the machine with refrigerant.

(3) Starting the machine.

b. Open Machines:

(1) Erection, alignment, testing, and dehydrating.

(2) Charging the machine with refrigerant.

(3) Starting the machine.

3.5 CLEANING AND ADJUSTING

3.5.1 Piping

Pipes shall be cleaned free of scale and thoroughly flushed of all foreign matter. A temporary bypass shall be provided for all water coils to prevent flushing water from passing through coils. Strainers and valves shall be thoroughly cleaned. Prior to testing and balancing, air shall be removed from all water systems by operating the air vents. Temporary measures, such as piping the overflow from vents to a collecting vessel shall be taken to avoid water damage during the venting process. Air vents shall be plugged or capped after the system has been vented.

3.5.2 Equipment

Equipment shall be wiped clean, with all traces of oil, dust, dirt, or paint spots removed. Temporary filters shall be provided for all fans that are operated during construction, and new filters shall be installed after all construction dirt has been removed from the building. System shall be maintained in this clean condition until final acceptance. Bearings shall be properly lubricated with oil or grease as recommended by the manufacturer. Belts shall be tightened to proper tension. Control valves and other miscellaneous equipment requiring adjustment shall be adjusted to setting indicated or directed. Fans shall be adjusted to the speed indicated by the manufacturer to meet specified conditions.

3.6 DEMONSTRATIONS

Contractor shall conduct a training course for the operating staff as designated by the Contracting Officer. The training period shall consist of a total 40 hours of normal working time and start after the system is functionally completed but prior to final acceptance tests. The field instructions shall cover all of the items contained in the approved operation and maintenance manuals as well as demonstrations of routine maintenance operations.

-- End of Section --

SECTION TABLE OF CONTENTS

DIVISION 16 - ELECTRICAL

SECTION 16070

SEISMIC PROTECTION FOR ELECTRICAL EQUIPMENT

PART 1 GENERAL

1.1 REFERENCES
1.2 SYSTEM DESCRIPTION
1.2.1 General Requirements
1.2.2 Electrical Equipment
1.2.3 Electrical Systems
1.2.4 Contractor Designed Bracing
1.2.5 Conduits Requiring No Special Seismic Restraints
1.3 SUBMITTALS
1.4 EQUIPMENT REQUIREMENTS

PART 2 PRODUCTS

2.1 LIGHTING FIXTURE SUPPORTS
2.2 SWAY BRACING MATERIALS

PART 3 EXECUTION

3.1 SWAY BRACES FOR CONDUIT
3.2 LIGHTING FIXTURES IN BUILDINGS
3.2.1 Pendant Fixtures
3.2.2 Ceiling Attached Fixtures
3.2.2.1 Recessed Fluorescent Fixtures
3.2.2.2 Surface-Mounted Fluorescent Fixtures
3.2.3 Assembly Mounted on Outlet Box
3.2.4 Wall-Mounted Emergency Light Unit
3.2.5 Lateral Force

-- End of Section Table of Contents --

SECTION 16070

SEISMIC PROTECTION FOR ELECTRICAL EQUIPMENT

PART 1 GENERAL

1.1 REFERENCES

The publications listed below form a part of this specification to the extent referenced. The publications are referred to in the text by basic designation only.

AMERICAN SOCIETY FOR TESTING AND MATERIALS (ASTM)

ASTM E 580	(1996) Application of Ceiling Suspension Systems for Acoustical Tile and Lay-in Panels in Areas Requiring Moderate Seismic Restraint

CORPS OF ENGINEERS, HUNTSVILLE ENGINEERING AND SUPPORT CENTER (CEHNC)

TI 809-04	(1998) Seismic Design for Buildings

UNDERWRITERS LABORATORIES (UL)

UL 1570	(1995; Rev thru Feb 1999) Fluorescent Lighting Fixtures
UL 1571	(1995; Rev thru Feb 1999) Incandescent Lighting Fixtures

1.2 SYSTEM DESCRIPTION

1.2.1 General Requirements

The requirements for seismic protection measures described in this section shall be applied to the electrical equipment and systems listed below. Structural requirements shall be in accordance with Section 13080 SEISMIC PROTECTION FOR MISCELLANEOUS EQUIPMENT.

1.2.2 Electrical Equipment

Electrical equipment shall include the following items to the extent required on the drawings or in other sections of these specifications:

Control Panels	Air Handling Units
Pumps with Motors	**Motor Control Centers**
Light Fixtures	**Switchboard (Floor Mounted)**

1.2.3 Electrical Systems

The following electrical systems shall be installed as required on the

drawings and other sections of these specifications and shall be seismically protected in accordance with this specification.

1.2.4 Contractor Designed Bracing

The Contractor shall design the bracing in accordance with TI 809-04 and additional data furnished by the Contracting Officer. Resistance to lateral forces induced by earthquakes shall be accomplished without consideration of friction resulting from gravity loads. TI 809-04 uses parameters for the building, not for the equipment in the building; therefore, corresponding adjustments to the formulas shall be required. Loadings determined using TI 809-04 are based on strength design; therefore, the AISC LRFP specifications shall be used for the design.

1.2.5 Conduits Requiring No Special Seismic Restraints

Seismic restraints may be omitted from electrical conduit less than 64 mm trade size. All other interior conduit, shall be seismically protected as specified.

1.3 SUBMITTALS

Government approval is required for submittals with a "GA" designation; submittals having an "FIO" designation are for information only. The following shall be submitted in accordance with Section 01330 SUBMITTAL PROCEDURES:

SD-01 Data

Lighting Fixtures in Buildings; GA. Equipment Requirements; GA.

Copies of the design calculations with the detail drawings. Calculations shall be stamped by a registered engineer and shall verify the capability of structural members to which bracing is attached for carrying the load from the brace.

Contractor Designed Bracing; GA.

Copies of the Design Calculations with the Drawings. Calculations shall be approved, certified, stamped and signed by a Registered Professional Engineer. Calculations shall verify the capability of structural members to which bracing is attached for carrying the load from the brace.

SD-04 Drawings

Lighting Fixtures in Buildings; GA. Equipment Requirements; GA.

Detail drawings along with catalog cuts, templates, and erection and installation details, as appropriate, for the items listed. Submittals shall be complete in detail; shall indicate thickness, type, grade, class of metal, and dimensions; and shall show construction details, reinforcement, anchorage, and installation with relation to the building construction.

1.4 EQUIPMENT REQUIREMENTS

The following specific items of equipment: Switchboard and motor control center to be furnished under this contract shall be constructed and assembled to withstand the seismic forces specified in TI 809-04, Chapter

10. Each item of rigid electrical equipment shall be entirely located and rigidly attached on one side only of a building expansion joint. Piping, electrical conduit, etc., which cross the expansion joint shall be provided with flexible joints that are capable of accommodating displacements equal to the full width of the joint in both orthogonal directions.

Switch Boards
Motor Control Centers

PART 2 PRODUCTS

2.1 LIGHTING FIXTURE SUPPORTS

Lighting fixtures and supports shall conform to UL 1570 or UL 1571 as applicable.

2.2 SWAY BRACING MATERIALS

Sway bracing materials (e.g. rods, plates, rope, angles, etc.) shall be as specified in Section 13080 SEISMIC PROTECTION FOR MISCELLANEOUS EQUIPMENT.

PART 3 EXECUTION

3.1 SWAY BRACES FOR CONDUIT

Conduit shall be braced as for an equivalent weight pipe in accordance with Section 15070 SEISMIC PROTECTION FOR MECHANICAL EQUIPMENT.

3.2 LIGHTING FIXTURES IN BUILDINGS

Lighting fixtures and supports shall conform to the following:

3.2.1 Pendant Fixtures

Pendant fixtures shall conform to the requirements of TI 809-04, Chapter 10.

3.2.2 Ceiling Attached Fixtures

3.2.2.1 Recessed Fluorescent Fixtures

Recessed fluorescent individual or continuous-row mounted fixtures shall be supported by a seismic-resistant suspended ceiling support system built in accordance with ASTM E 580. Seismic protection for the fixtures shall conform to the requirements of TI 809-04, Chapter 10. Recessed lighting fixtures not over 25 kg in weight may be supported by and attached directly to the ceiling system runners using screws or bolts, number and size as required by the seismic design. Fixture accessories, including louvers, diffusers, and lenses shall have lock or screw attachments.

3.2.2.2 Surface-Mounted Fluorescent Fixtures

Surface-mounted fluorescent individual or continuous-row fixtures shall be attached to a seismic-resistant ceiling support system built in accordance with ASTM E 580. Seismic protection for the fixtures shall conform to the requirements of TI 809-04, Chapter 10.

3.2.3 Assembly Mounted on Outlet Box

A supporting assembly, that is intended to be mounted on an outlet box,

shall be designed to accommodate mounting features on 100 mm boxes, plaster rings, and fixture studs.

3.2.4 Wall-Mounted Emergency Light Unit

Attachments for wall-mounted emergency light units shall be designed and secured for the worst expected seismic disturbance at the site.

3.2.5 Lateral Force

Structural requirements for light fixture bracing shall be in accordance with Section 13080 SEISMIC PROTECTION FOR MISCELLANIOUS EQUIPMENT.

-- End of Section --