PROJECT TABLE OF CONTENTS

DIVISION 01 - GENERAL REQUIREMENTS

01090 SOURCES FOR REFERENCE PUBLICATIONS
01312 RESIDENT MANAGEMENT SYSTEM (RMS)
01320 PROJECT SCHEDULE
01330 SUBMITTAL PROCEDURES
01415 METRIC MEASUREMENTS
01430 ENVIRONMENTAL PROTECTION
01452 SPECIAL INSPECTION FOR SEISMIC-RESISTING SYSTEMS
01455 CONTRACTOR QUALITY CONTROL
01572 CONSTRUCTION AND DEMOLITION WASTE MANAGEMENT
01780 CLOSEOUT SUBMITTALS
01900 MISCELLANEOUS PROVISIONS

DIVISION 02 - SITE WORK

02092 EXPOSURE ASSESSMENT FOR WORKERS EXPOSED TO LEAD-CONTAINING PAINT
02200 MICROTUNNELING
02201 SHAFT CONSTRUCTION
02220 DEMOLITION
02230 CLEARING AND GRUBBING
02243 DRAINAGE LAYER-RAPID DRAINING MATERIAL
02286 GRANULAR TERMITE BARRIER (GTB)
02300 EARTHWORK
02315 EXCAVATION, FILLING AND BACKFILLING FOR BUILDINGS
02316 EXCAVATION, TRENCHING, AND BACKFILLING FOR UTILITIES SYSTEMS
02510 WATER DISTRIBUTION SYSTEM
02531 SANITARY SEWERS
02555 PREFABRICATED UNDERGROUND HEATING/COOLING DISTRIBUTION SYSTEM
02620 SUBDRAINAGE SYSTEM
02630 STORM-DRAINAGE SYSTEM
02721 SUBBASE COURSES
02722 AGGREGATE AND/OR GRADED-CRUSHED AGGREGATE BASE COURSE
02731 TUNNELING
02741 BITUMINOUS PAVING FOR ROADS, STREETS AND OPEN STORAGE AREAS
02748 BITUMINOUS TACK AND PRIME COATS
02763 PAVEMENT MARKINGS
02770 CONCRETE SIDEWALKS AND CURBS AND GUTTERS
02811 UNDERGROUND SPRINKLER SYSTEMS
02821 FENCING
02921 SEEDING
02922 SODDING
02930 EXTERIOR PLANTING

DIVISION 03 - CONCRETE

03100 STRUCTURAL CONCRETE FORMWORK
03150 EXPANSION JOINTS, SLIDING JOINTS, AND WATERSTOPS
03200 CONCRETE REINFORCEMENT
03300 CAST-IN-PLACE STRUCTURAL CONCRETE
03410 PRECAST/PRESTRESSED CONCRETE FLOOR AND ROOF UNITS

DIVISION 04 - MASONRY

04200 MASONRY
04411 CEMENT RUBBLE MASONRY

DIVISION 05 - METALS

05120 STRUCTURAL STEEL
05210 STEEL JOISTS
05300 STEEL DECKING
05500 MISCELLANEOUS METAL

DIVISION 06 - WOODS & PLASTICS

06100 ROUGH CARPENTRY
06200 FINISH CARPENTRY
06650 SOLID SURFACING

DIVISION 07 - THERMAL & MOISTURE PROTECTION

07131 ELASTOMERIC MEMBRANE WATERPROOFING
07132 BITUMINOUS WATERPROOFING
07141 FLUID-APPLIED WATERPROOF DECK COATING
07210 SOUND BARRIER INSULATION
07220 ROOF INSULATION FOR BUILT-UP ROOFING
07240 EXTERIOR INSULATION AND FINISH SYSTEM (EIFS)
07416 STANDING SEAM METAL ROOF (SSMR) SYSTEM AND SIDING
07417 STRUCTURAL STANDING SEAM METAL ROOF (SSSMR) SYSTEM (FOR BUILDINGS DN-1, BN-1, BN-2 RSC AND CENTRAL PLANT ONLY)
07510 BUILT-UP ROOFING
07600 SHEET METALWORK, GENERAL
07810 SPRAY-APPLIED FIREPROOFING
07840 FIRESTOPPING
07900 JOINT SEALING

DIVISION 08 - DOORS & WINDOWS

08110 STEEL DOORS AND FRAMES
08120 ALUMINUM DOORS AND FRAMES
08210 WOOD DOORS
08330 OVERHEAD ROLLING DOORS
08331 METAL ROLLING COUNTER DOORS
08353 OPERABLE PARTITIONS
08510 STEEL WINDOWS
08520 ALUMINUM WINDOWS
08700 BUILDERS' HARDWARE
08810 GLASS AND GLAZING

DIVISION 09 - FINISHES

09250 GYPSUM WALLBOARD
09310 CERAMIC TILE
09510 ACOUSTICAL CEILINGS
09650 RESILIENT FLOORING
09680 CARPET
09720 WALLCOVERINGS
09840 ACOUSTICAL TREATMENT
09880 ACRYLIC TEXTURED WALL COATINGS
09900 PAINTING, GENERAL
09915 COLOR SCHEDULE
09951 ACRYLIC WALL COATINGS

DIVISION 10 - SPECIALTIES

10100 VISUAL COMMUNICATIONS SPECIALTIES
10160 TOILET PARTITIONS
10201 METAL WALL AND DOOR LOUVERS
10270 RAISED FLOOR SYSTEM
10430 EXTERIOR SIGNAGE
10440 INTERIOR SIGNAGE
10522 FIRE EXTINGUISHERS
10550 MAILBOXES
10800 TOILET ACCESSORIES

DIVISION 11 - EQUIPMENT

11131 PROJECTION SCREEN
11400 FOOD SERVICE EQUIPMENT

DIVISION 12 - FURNISHINGS

12320 CABINETS AND COUNTERTOPS
12490 WINDOW TREATMENT

DIVISION 13 - SPECIAL CONSTRUCTION

13080 SEISMIC PROTECTION FOR MECHANICAL, ELECTRICAL EQUIPMENT
13280 ASBESTOS ABATEMENT
13851 FIRE DETECTION AND ALARM SYSTEM, ADDRESSABLE
13852 FIRE ALARM REPORTING SYSTEM, RADIO TYPE
13930 WET PIPE SPRINKLER SYSTEM, FIRE PROTECTION
13945 PREACTION AND DELUGE SPRINKLER SYSTEMS, FIRE PROTECTION

DIVISION 14 - CONVEYING SYSTEMS

14210 ELEVATORS, ELECTRIC
14240 ELEVATORS, HYDRAULIC

DIVISION 15 - MECHANICAL

15070 SEISMIC PROTECTION FOR MECHANICAL EQUIPMENT
15080 THERMAL INSULATION FOR MECHANICAL SYSTEMS
15400 PLUMBING, GENERAL PURPOSE
15488 GAS PIPING SYSTEMS
15650 CENTRAL REFRIGERATED AIR-CONDITIONING SYSTEM
15652 COLD STORAGE REFRIGERATION SYSTEMS
15653 AIR-CONDITIONING SYSTEM (UNITARY TYPE)
15895 AIR SUPPLY, DISTRIBUTION, VENTILATION, AND EXHAUST SYSTEM
15951 DIRECT DIGITAL CONTROL FOR HVAC
15990 TESTING, ADJUSTING, AND BALANCING OF HVAC SYSTEMS

DIVISION 16 - ELECTRICAL

16070 SEISMIC PROTECTION FOR ELECTRICAL EQUIPMENT
16263 DIESEL-GENERATOR SET STATIONARY 100-2500 KW, WITH AUXILIARIES
16370 ELECTRICAL DISTRIBUTION SYSTEM, AERIAL
16375 ELECTRICAL DISTRIBUTION SYSTEM, UNDERGROUND
16410 AUTOMATIC TRANSFER AND BY-PASS/ISOLATION SWITCHES
16415 ELECTRICAL WORK, INTERIOR
16710 PREMISES DISTRIBUTION SYSTEM
16770 PUBLIC ADDRESS SYSTEMS
16781 CABLE TELEVISION SYSTEM

-- End of Project Table of Contents --

SUBMITTAL REGISTER
(ER 415 1-10)

CONTRACT NO.

TITLE AND LOCATION
FY00 MCA PN 46902 Ph 2A1, WBR Renal, SB

CONTRACTOR

SPECIFICATION SECTION
02731

ACTIVITY NO a.	TRANS-MITTAL NO. b.	ITEM NO c.	SPECIFICATION PARAGRAPH NUMBER d.	DESCRIPTION OF ITEM SUBMITTED e.	TYPE OF SUBMITTAL: DATA f.	DRAWINGS g.	INSTRUCTIONS h.	SCHEDULES i.	STATEMENTS j.	REPORTS k.	CERTIFICATES l.	SAMPLES m.	RECORDS n.	O&M MANUALS o.	CLASSIFICATION: INFORMATION ONLY p.	GOVERNMENT APPROVED q.	REVIEWER r.	CONTRACTOR SCHEDULE DATES: SUBMIT s.	APPROVAL NEEDED BY t.	MATERIAL NEEDED BY u.	CONTRACTOR ACTION: CODE v.	DATE w.	SUBMIT TO GOVERN-MENT x.	GOVERNMENT ACTION: CODE y.	DATE z.	REMARKS aa.
			1.5	Tunneling Work Plan	X											X										
			1.5	Design Calculations	X										X											
			1.5	Reports and Records						X						X										
			1.5	Quality Control Methods						X					X											
			1.5	Personnel Qualifications						X					X											
			1.5	Geotechnical						X					X											
			1.5	Safety						X					X											
			1.5	Ground Surface Monitoring Plan						X					X											
			1.5	Building and Structural Assessment Plan						X						X										
			1.5	Building and Structure Assessment						X						X										

SUBMITTAL REGISTER
(ER 415 1-10)

CONTRACT NO.

TITLE AND LOCATION
FY00 MCA PN 46902 Ph 2A1, WBR Renal, SB

CONTRACTOR

SPECIFICATION SECTION
16370

ACTIVITY NO a.	TRANS-MITTAL NO. b.	ITEM NO c.	SPECIFICATION PARAGRAPH NUMBER d.	DESCRIPTION OF ITEM SUBMITTED e.	TYPE OF SUBMITTAL: DATA f.	DRAWINGS g.	INSTRUCTIONS h.	SCHEDULES i.	STATEMENTS j.	REPORTS k.	CERTIFICATES l.	SAMPLES m.	RECORDS n.	O&M MANUALS o.	CLASSIFICATION: INFORMATION ONLY p.	GOVERNMENT APPROVED q.	REVIEWER r.	CONTRACTOR SCHEDULE DATES: SUBMIT s.	APPROVAL NEEDED BY t.	MATERIAL NEEDED BY u.	CONTRACTOR ACTION: CODE v.	DATE w.	SUBMIT TO GOVERNMENT x.	GOVERNMENT ACTION: CODE y.	DATE z.	REMARKS aa.
			1.3	As-Built Drawings		X									X											
			1.3	Material, Equipment, and Fixture Lists	X										X											
			3.4	Field Testing						X					X											
			1.3	Materials and Equipment							X				X											

(Am-0005)

SECTION TABLE OF CONTENTS

DIVISION 02 - SITE WORK

SECTION 02200

MICROTUNNELING

PART 1 GENERAL

1.1 REFERENCES
1.2 SYSTEM DESCRIPTION
1.3 DEFINITIONS
1.3.1 Microtunneling
1.3.2 Surface Settlement Points
1.3.3 Intermediate Jacking Stations
1.3.4 Emergency Pit
1.4 DESIGN CRITERIA
1.5 SUBMITTALS
1.6 CRITERIA FOR DETERMINING CONSTRUCTION LOADS
1.6.1 Calculations
1.6.2 Compatibility of Methods
1.7 JOB CONDITION
1.7.1 Safety Requirements
1.7.2 Air Quality
1.7.3 Ground Conditions
1.8 MICROTUNNELING QUALIFICATION

PART 2 PRODUCTS

2.1 MATERIAL
2.1.1 Jacking Pipes
2.1.2 Pipe
2.1.3 Centrifugally Cast Fiberglass Reinforced Polymer Mortar Pipe (CCFRPM)

PART 3 EXECUTION

3.1 PREPARATION
3.2 TEMPORARY VENTILATION
3.3 EQUIPMENT
3.3.1 Microtunnel Boring Machine (MTBM)
3.3.2 Automated Spoil Transportation
3.3.3 Pipe Jacking Equipment
3.3.4 Remote Control System
3.3.5 Active Direction Control
3.4 SHAFTS
3.4.1 Construction of Shafts
3.4.2 Trench Excavation
3.4.3 Thrust Blocks
3.5 EXCAVATION AND JACKING OF PIPE
3.5.1 Thrust Blocks
3.5.2 Pipe Installation
3.5.3 Spoil Transport and Disposal
3.5.4 Grouting

3.6 CONTROL OF LINE AND GRADE
3.6.1 Construction and Control
3.6.2 Earth Movement
3.6.3 Line and Grade
3.7 MONITORING
3.7.1 Settlement Surveying
3.7.2 Surface Settlement Points
3.8 BUILDING AND STRUCTURE ASSESSMENT
3.9 DISPOSAL OF EXCESS MATERIAL
3.10 CONSTRUCTION AREA APPEARANCE

-- End of Section Table of Contents --

SECTION 02200

MICROTUNNELING

PART 1 GENERAL

1.1 REFERENCES

The publications listed below form a part of this specification to the extent referenced. The publications are referred to in the text by basic designation only.

OCCUPATIONAL SAFETY AND HEALTH ADMINISTRATION (OSHA)

29 CFR Part 1926, Subpart S	Regulations and Standards for Underground Construction

1.2 SYSTEM DESCRIPTION

This section provides the minimum requirements for the trenchless installation of storm drainage, pipe by microtunneling boring machine (MTBM). The Contractor shall use microtunneling (drainline #DAA Sta 0 + 50 to 2 + 95) to install the (1350 mm) drainage sewer pipe in the area shown on the drawings. Contractor shall be responsible for the final constructed product, materials, and tools used, and for furnishing the labor and qualified operators and/or superintendents necessary for the selected method of construction. **The Contractor shall furnish all items, including but not limited to, the Microtunneling Boring Machine (MTBM), remote control system, pipe jacking equipment, grout equipment, automated spoils transportation system, hoists, signal system, safety equipment and survey controls, necessary to excavate and advance the tunnel and construct the storm drain system.** The Contractor is responsible for verifying existing utility locations, routing the new pipe layout so as to not interfere with the existing utilities, and taking all precautions necessary to protect existing utilities from damage. Repair any utilities damaged by microtunneling immediately, at no additional cost to the Government. Attached to the end of the section are boring location and logs taken along the proposed alignment.

1.3 DEFINITIONS

1.3.1 Microtunneling

For the purpose of this Section, microtunneling is defined as the trenchless installation of a specialized pipe by jacking the pipe behind a remotely controlled, steerable, laser-guided, articulated tunnel boring machine.

1.3.2 Surface Settlement Points

Survey control points established at the ground surface along the pipe alignment for monitoring surface settlement due to subsurface excavation.

1.3.3 Intermediate Jacking Stations

A series of hydraulic jacks spaced around the pipe circumference and temporarily installed between two pipe segments. The jacks are installed inside steel casing fabricated to the same outside diameter as the pipe. The stations are used to distribute the thrusting force along the pipe string by dividing the string into independent reaches. Each intermediate jacking station pushes the reach of pipe segments located between that station and the next station forward in the direction of the drive.

1.3.4 Emergency Pit

A shaft or structure installed along the pipe string to retrieve the MTBM, perform maintenance not originally planned, or due to any unforeseen obstructions. These shafts are installed and eased for the convenience of the Contractor with the permission of the Contracting Officer. Permits, access, restoration and other costs shall be at no cost to the Government.

1.4 DESIGN CRITERIA

a. Only pressurized, closed face, remotely operated microtunneling equipment shall be used for all microtunneling work described.

b. Tunneling equipment selected for the project shall be designed and constructed to handle the geologic conditions described in the GEOTECHNICAL REPORT.

c. Face pressure exerted at the heading by the microtunneling machine shall be maintained as required to balance soil and groundwater pressures present, and minimize loss of ground, groundwater inflows, and settlement or heave of the ground surface. Control ground surface settlement or heave to 12 mm or less. The Contractor shall repair any damage resulting from surface settlement or heave caused by microtunneling, jacking and receiving pit excavation, or dewatering at no additional cost to the Government.

d. The thrust block shall be constructed perpendicular to the proposed pipe alignment and shall be designed to withstand the maximum jacking pressure to be used, with a factor of safety of at least 2.5, without excessive deflection or displacement.

e. Dewatering for groundwater control shall be utilized if required, only at the tunneling pits.

1.5 SUBMITTALS

Government approval is required for all submittals with a "GA" designation; submittals having an "FIO" designation are for information only. The following shall be submitted in accordance with Section 01330 SUBMITTAL PROCEDURES:

SD-01 Data

Tunneling Work Plan; GA.

Prior to construction, the Contractor shall submit for review documents showing the methods and materials to be used for the installation of microtunneling pipe. Review and acceptance of the Contractor submittals by the Contracting Officer shall not be construed in any way as relieving the Contractor of his/her responsibilities under this Contract. **Contractor shall not commence work on any items requiring a Tunneling Work Plan or**

other submittals until the submittals have been reviewed and accepted by the Contracting Officer. Structural designs and other engineered components shall be signed and sealed by a Professional Structural Engineer registered in the State of Hawaii.

The Contractor shall submit, no later than 30 calendar days after Contract Notice-to-Proceed date, for review, a Tunneling Work Plan with complete drawings and written description detailing the proposed method of construction, equipment to be used, and sequence of operations to be performed during construction. The drawings and descriptions shall be sufficiently detailed to demonstrate to the Contracting Officer whether the proposed materials and procedures will meet the requirements of these specifications. The Tunneling Work Plan, including drawings, shall be submitted on the following items:

a. Provide Manufacturer's arrangement drawings, data sheets and specifications describing in detail the tunneling system to be used including machine type, spoil removal system, guidance system, and provisions for injecting pipe lubricants.

b. Detailed description of at least two other similar projects in which proposed system has been used. Include experience record of the Contractor and equipment operator with this type of machine and soil conditions.

c. Schedule for microtunneling work identifying all major construction activities as independent items. The schedule shall include as a minimum the following items: mobilization; pit excavation and excavation supports; jacking equipment set up; microtunneling for each drive; site restoration, clean-up and demobilization. The schedule shall also include working hours for each activity and a written description of the construction methods and equipment, to be used in completing each activity shown on the schedule. The schedule shall be reviewed with the Contracting Officer and be updated and resubmitted by the Contractor on a monthly basis.

d. A description of the grade and alignment control system.

e. Description of ventilation system and calculations.

f. Description of lighting and electrical system.

g. Description of method and details to control and dispose of spoil and slurry. Include handling, separation, transport and disposal, equipment and procedures. Also include details of the slurry weight and viscosity and any slurry additives, slurry separation plant and the location of slurry and commercial spoil disposal site(s). **Provide written documentation from the disposal site(s) indicating they will accept the spoil or slurry and are in compliance with State regulations.**

h. Details of pipe jacking method and operation including jack setup for jack thrust reaction bearing. Submit thrust block design and details. Submit calculations demonstrating that the block can transfer the maximum planned force developed by the main jacks to the ground without excessive movements.

i. Capacity, number and arrangement of main jacks. Provide details of thrust ring, jacking controls, and pressure gages. Provide the maximum

anticipated jacking load required to complete each drive and the supporting calculations. Calculations should take into account face excavation forces, friction factor, and weight of MTBM and pipes.

j. Details of method proposed to cushion and distribute jacking forces at pipe joints.

k. Details of pipe lubrication system and type of lubrication materials to be used.

l. Description of method(s) to control and dispose of groundwater, temporary shoring and other materials encountered in the construction and maintenance of pits.

m. Details of pit dimensions, locations, surface construction, profile, depth, method of excavation, shoring, bracing, and thrust block design.

n. Procedure for measuring excavation quantities versus forward progress during the tunneling operation.

o. Instructions for storage, handling, and installation including means of transporting pipe to jacking pit.

p. Approved repair method from pipe supplier for in-place repair of damaged pipe.

q. Sample of automated data logging and daily submittals of machine data reports.

r. Grouting materials and techniques to be used for over excavation and/or annular space, if any, including grouting equipment, pumping and injection procedures, pressure grout types and mixtures.

s. A detailed plan for monitoring ground surface settlement due to the microtunneling operation, including methods, procedures, and location of settlement monitoring points in accordance with Paragraph 3.8 MONITORING. Ground movement monitoring shall also include areas adjacent to jacking, receiving and intermediate pits.

t. Provide a general plan, procedures, and details for constructing recovery shafts to retrieve the MTBM or remove obstructions that are encountered during microtunneling.

SD-09 Reports and Records

Reports and Records; GA.

Submit survey measurements of surface settlement points to the Engineer by the end of the same day that measurements are taken.

Automated data logs to construction events and observations shall be submitted for each shift within 24 hours of the operations on at least the following:

a. Location of MTBM face by station and progress of tunnel drive during shift.

b. Hours worked per shift.

c. Completed field forms for checking line and grade, with achieved tolerance relative to design alignment. Copies of steering control data will generally be acceptable.

d. Automated data logs shall include real time information such as roll, pitch, altitude, rate of advance, installed length, cutterhead torque, jacking loads, slurry pressure, slurry flow, and slurry valve positions. Requires computer disk and printed hard copy.

e. Amount of lubrication pumped per foot of pipe and cumulative total. Written records shall also record any slurry losses or other unusual occurrences.

f. Location and brief soil descriptions of significant soil strata.

g. Amount of spoil removed per foot of pipe and cumulative total.

h. Observation of lost ground or other ground movement.

i. Indications of damaged pipe joint on pipe.

j. Any unusual conditions or event.

k. Operation shutdown periods or other interruptions in the work with reasons.

l. Jacking loads at end of shift vs. first loads on the following day.

Quality Control Methods; FIO.

At least 30 calendar days prior to the start of tunneling, the contractor shall submit to the Contracting Officer a description of the quality control methods proposed for tunneling operation. The submittal shall include:

a. Line and Grade. Procedures for surveying, controlling and checking initial setup and tunnel line and grade, including field forms.

b. Tunneling Observation and Monitoring. Procedures for preparing and submitting daily logs of tunneling operations, including field forms, to meet the requirements of Paragraph 3.8 MONITORING.

c. Products and Materials. A plan for testing and submittal of test results to demonstrate compliance with the specifications and contractor's design criteria for permanent products, materials, and installations. The plan shall identify applicable standards and procedures for testing and acceptance.

d. Settlement Survey Plan to meet the requirements of Paragraph MONITORING.

e. Building Condition/Assessment Plans. Building Condition/Assessment plan to meet the requirements of Paragraph 402.10(I), Buildings and Structures Assessment.

Geotechnical; FIO.

The results of any Geotechnical investigations performed by a contractor as relevant to tunneling shall be included in the Tunneling Work Plan.

Safety; FIO.

Procedures to meet all current applicable regulations of the federal, state and local agencies, including, but not limited to, 29 CFR Part 1926, Subpart S Underground Construction by OSHA. These procedures shall be submitted for record purpose only and will not be subject to approval by the Contracting Officer. As a minimum, provide for:

a. Protection against soil instability and groundwater inflow

b. Safety for shaft access and exit, including ladders, stairs, walkways, and hoists.

c. Protection against mechanical and hydraulic equipment operations, and for lifting and hoisting equipment and material.

d. Ventilation and lighting.

e. Monitoring for hazardous gases.

f. Protection against flooding and means for emergency evacuation.

g. Protection of shaft including traffic barriers, accidental or unauthorized entry, and falling objects.

h. Emergency protection equipment.

i. Safety supervising responsibilities.

1.6 CRITERIA FOR DETERMINING CONSTRUCTION LOADS

The criteria to be used for determination of construction loads shall take into account, as a minimum, the loading criteria provided in the drawings; long-term earth and hydrostatic loads; construction loads, such as erection and jacking forces; loads from handling and storing; and space necessary to install permanent structures.

The criteria to be used for truck loading shall be HS-20 vehicle loading distributions in accordance with AASHTO.

The criteria for longitudinal loading (jacking forces) on the pipe and joints shall be determined by the contractor, based on the selected method of construction.

1.6.1 Calculations

The jacking equipment installed must have a capacity at least 20 percent greater than the calculated theoretical maximum jacking load.

The contractor shall be responsible for selection of the appropriate pipe and pipe joints to carry the thrust of the jacks. Unless otherwise noted, any design indicated on the drawings considers in-place loads only and does not take into account any construction loads.

Provide pipes of diameter shown on the drawings. Substitution of pipe with larger diameter to suit MTBM equipment will be permitted if (1) the

contractor can demonstrate that design flows and velocities can be achieved, (2) specific project constraints are met such as shaft size, equipment footprint, MH distances and other conditions as may be required by the Contracting Officer.

1.6.2 Compatibility of Methods

The methods of tunneling, pipe jacking, ground stabilization, and groundwater control shall be compatible.

The jacked pipe shall be selected to withstand the thrust without damage or distortion. The propulsion jacks on the shield shall be configured so that the thrust is uniformly distributed and will not damage or distort the pipe.

The tunneling method must be compatible with possible restrictions on the work, such as influence on existing installations, or potential groundwater contamination, if any.

1.7 JOB CONDITION

1.7.1 Safety Requirements

Perform work in a manner to maximize safety and avoid exposure of workers and equipment to hazardous and potentially hazardous conditions, in accordance with applicable safety standards and contractor's safety procedures.

Perform tunneling operations in a manner that will minimize the movement of the ground in front of and surrounding the tunnel. Minimize subsidence of the surface. Prevent damage of structures and utilities above and in the vicinity of the tunneling operations.

Support the ground continuously in a manner to prevent loss of ground and keep the perimeters and faces of the tunnel and bottoms of the shaft stable.

1.7.2 Air Quality

Conduct operations by methods and with equipment that will positively control dust, fumes, vapors, gases, or other atmospheric impurities in accordance with OSHA, Federal, and State requirements.

Provide approved instrumentation for testing the quality of the air in manned work areas. Obtain samples under working conditions at prescribed intervals in accordance with the above referenced requirements. Submit the results of the air quality tests to the Contracting Officer each week.

1.7.3 Ground Conditions

Perform sufficient analysis of the completed soil exploration reports, boring logs and environmental reports in advance of construction to define parameters for design of pipe installations, planning and design of groundwater control system, and for selection of tunneling method and equipment for successful completion of each tunneling reach. Perform any necessary ground improvements in areas with weak or unstable soils.

1.8 MICROTUNNELING QUALIFICATION

All microtunneling work shall be performed by an experienced microtunneling work force with minimum of three years experience in this type of work.

All surveying work shall be performed by a land surveyor licensed in the state of Hawaii. The land surveyor monitoring surface settlement points shall have previous experience surveying for the detection of structural deformations and surface movements.

The Contractor shall submit information showing that the equipment he intends to use for this project will meet the following minimum requirements:

a. A list of microtunneling equipment to be used including: Type; name of manufacturer or supplier; experience record with the equipment; years of use of the specific equipment; support equipment normally used.

b. The equipment specified by the Contractor for this project shall have been successfully used on at least three other projects of similar geology, scope, and complexity.

c. The microtunneling boring machine (MTBM) shall be remotely operated, have a closed face capable of providing positive supporting pressure to fill the excavated area at all times, and must have the capability of controlling the pressure at the face to prevent loss of surface and groundwater inflows.

d. The system must be capable of making any adjustments required to maintain face stability for the anticipated soil conditions.

e. For equipment that uses a slurry spoil transportation system, the earth and groundwater pressure at the face shall be controlled by the use of variable speed slurry pumps, pressure control valves and a flow meter.

f. The machine shall be remotely operated, laser guided, and monitored continuously by the operator. A display showing and automatically recording the position of the machine in relation to design line-and-grade shall be provided at the operation console to allow the operator the capability to monitor face pressure, roll, inclination, laser position, steering altitude, rate of advance, installed length, cutter head torque, valve positions, jacking load, jacking speed, slurry pressure, and slurry flow. **The laser guidance system shall consist of a laser beam and an active or passive target. The system must be capable of maintaining line and grade to within (± 25 mm distance of 25 m).**

g. The MTBM shall have an articulated shield to enable remote steering of the system. Steering of the head shall be monitored and controlled from the operation console located at the surface.

h. The MTBM shall have a cutter head capable of minimizing rotation or roll of the pipe during installation by means of a bi-directional drive on the cutter head or by use of fins or grippers.

i. The automated soil transport system and rate of excavation shall be monitored and controlled from the operations console located at the surface.

j. Should the successful responsible Contractor plan to lease the microtunneling equipment from an equipment supplier, the Contractor

shall supply the name of the supplier, contact information, and list of equipment to be leased.

PART 2 PRODUCTS

2.1 MATERIAL

2.1.1 Jacking Pipes

Jacking pipes shall be round with a smooth, even outer surface, and have joints that allow for easy connections between pipe sections. The pipe ends shall be designed so that jacking loads are evenly distributed around the entire pipe joint and such that point loads will not occur when the pipe is installed. Pipe used for pipe jacking shall be capable of withstanding all forces that will be imposed by the process of installation, as well as the final in-place loading conditions. Protect the driving ends of the pipe and joints against damage. The contractor shall be responsible for selecting appropriate pipes and pipe joints to safely carry the loads imposed during construction, including jacking forces. Pipe joints shall be flush with the outside pipe face when the pipes are assembled. Tongue and groove joints shall not be allowed.

2.1.2 Pipe

Centrifugally Cast Fiberglass Reinforced Polymer Mortar Pipe (CCFRMPM) shall be used for construction of storm drain.

2.1.3 Centrifugally Cast Fiberglass Reinforced Polymer Mortar Pipe (CCFRPM)

Installed by microtunneling methods shall conform to the requirements of Section 02630 STORM DRAINAGE SYSTEM.

PART 3 EXECUTION

3.1 PREPARATION

The contractor shall be responsible for means and methods of tunneling and pipe jacking operations and shall ensure the safety of the work, the contractor's employees, the public and adjacent property, whether public or private.

Execute tunneling operations so that ground settlement heave or loss shall be (12 mm) or less. **The completed drain pipe shall have full bearing against earth; no voids or pocketed will be left in any portion of the work.** If loss of ground occurs, fill the resulting void wit suitable material, such as grout, as accepted by the Contracting Officer. This may require stopping jacking operations and installing additional access shafts with no additional cost to the Government.

Maintain clean working conditions inside the jacking operation area and remove spoil, debris, equipment, and other material not required for operations.

In man-entry-sized pipes,intermittent entry of personnel will be permitted for maintenance and removal of equipment provided that all safety precautions and adequate ventilation are in place and functional.

For tunneling under streets, perform the installation so as to minimize interference with the operation of the street.

Furnish all necessary equipment, power, water and utilities for microtunneling, pipe lubricant mixing and pumping, slurry separation, removal and disposal of spoil, grouting, and other related work required for the Contractor's methods of construction.

A thrust block is required to transfer jacking loads to the soil behind the jacking pit. The thrust block shall be properly designed and constructed and shall be perpendicular to the proposed pipe alignment. The thrust block shall be designed to support the maximum obtainable jacking pressure developed by the main jacks.

Conduct all operations such that trucks and other construction vehicles do not create a dust nuisance in the streets and adjacent properties. Promptly clean up, remove, and dispose of any spoil or slurry spillage. Traffic control shall be provided and approved by the Contracting Officer.

All work performed shall created the least amount of disturbance to roadways, adjacent structures, landscaped areas,or utilities. Any damage shall be immediately repaired to the satisfaction of the agency or utility having jurisdiction, at no additional cost to the Government.

3.2 TEMPORARY VENTILATION

Furnish and operate when personnel are underground, a temporary ventilation system and air monitoring system conforming to the requirements of OSHA. Provide a sufficient supply of fresh air and maintain an atmosphere free of toxic of flammable gases in all underground work areas.

3.3 EQUIPMENT

No gasoline powered equipment shall be permitted in the tunneling operation or pits. Diesel, electrical, hydraulic, or air-powered equipment is acceptable, subject to applicable federal and state regulations.

Any methods or equipment that the contractor can demonstrate, based on past experience, will produce the specified results for the ground conditions will be considered.

3.3.1 Microtunnel Boring Machine (MTBM)

Contractor shall employ equipment that will be capable of handling the various anticipated ground conditions. In addition, the MTBM shall:

a. Have a shield that is capable of maintaining the tunnel face under wet, moist, dry and adverse soil conditions and preventing loss of ground through the machine. The MTBM shall provide satisfactory support of the excavated face at all times.

b. Be articulated to allow steering. Incorporate a suitable seal between MTBM and the leading pipe to prevent material from flowing into the tunnel and the loss of bentonite.

c. Electric or hydraulic motors and operating controls shall be protected against water inflows to prevent potential hazards and failure of equipment.

d. Use a bi-directional drive on the cutter head wheel, or adjustable fins, to control roll.

e. During microtunneling operations, NO high-pressure water jetting at cutter head shall be allowed in non-cohesive soils (i.e. sand, silty sands, etc.).

3.3.2 Automated Spoil Transportation

Provide an MTBM that includes an automated spoil transportation slurry system, which shall:

a. Balance the soil pressures by the use of a slurry pressure balance system. System shall be capable of adjustments required to maintain face stability for the particular soil condition to be encountered on the Project and shall monitor and continuously balance the soil and groundwater pressure to prevent lost of slurry or uncontrolled soil and groundwater inflow.

b. In a slurry spoil transportation system, manage the pressure at the excavation face by use of the slurry pumps (which may be of variable speeds), pressure control valves, and a flow meter.

c. Include a slurry bypass unit or equivalent in the system to allow the direction of flow to be changed and isolated, as necessary.

d. Provide mechanical separation equipment (such as shakers, vibrating screens, desanders, hydrocyclones, and centrifuges) to aid in removal of spoil. Design it to provide adequate separation of the spoil from the slurry so that slurry with a sediment content within the limits set by the Tunneling Work Plan can be returned to the cutting face for reuse. Spoils containment shall not be permitted at the project site, bit ,must be hauled away by trucks to acceptable facilities in accordance with current State regulations for disposal of these materials.

e. Use the type of separation process suited to the size of tunnel being constructed, the soil type being excavated, and the workspace available at each work area for operating the plant.

f. Carefully monitor the composition of the slurry to maintain the slurry weight and viscosity limits defined by the Tunneling Work Plan.

3.3.3 Pipe Jacking Equipment

Provide an MTBM operation that includes a pipe jacking system with the following features:

a. Has the main jacks mounted in a jacking frame located in the jacking shaft.

b. Has a jacking frame that successively pushed the MTBM along with a string of connected pipes toward a receiving shaft.

c. Has sufficient jacking capacity to push the MTBM and the string of pipe though the ground.

d. Have hydraulic cylinder extension rates that are synchronized with

the excavation rate of the MTBM, as determined by the soil conditions.

e. Develops a uniform distribution of jacking forces on the end of the pipe by use of spreader rings and packing.

f. Provides and maintains a pipe lubrication system at all times to lower the friction developed on the surface of the pipe during jacking.

3.3.4 Remote Control System

Provide an MTBM which includes a remote control system with the following features:

a. Allows for operation of the system without the need for personnel to enter the tunnel. **The MTBM display equipment shall continuously show and automatically record the position of the shield with respect to the project design line and grade**. The automated recording system shall include real-time information such as ground water pressure, roll pitch, altitude, rate of advance, installed length, cutter head torque, jacking loads, slurry pressure, slurry flow, and slurry valve positions.

b. Integrates the system of excavation and removal of spoil and its simultaneous replacement by pipe. As each pipe section is jacked forward, the control system shall synchronize all of the operational functions of the system.

3.3.5 Active Direction Control

Provide an MTBM that includes an active direction control system with the following features:

a. Controls line and grade by a guidance system that relates the actual position of the MTBM to a design reference (e.g., by a laser beam transmitted from the jacking shaft along the centerline of the pipe to a target mounted in the shield).

b. Capable of maintaining line and grade. At no point through the microtunnel operation shall the invert grade deviate from the design by (± 25 mm), and the line shall not deviate horizontally by (± 25 mm).

c. Provides active steering information that shall be monitored and transmitted to the operating console.

d. Provide positioning and operation information to the operator on the operating console.

e. Equip all electrical systems utilized on the MTBM with appropriate fault systems. Use electrical system that is insulated, not permitting any bare wire exposures.

3.4 SHAFTS

3.4.1 Construction of Shafts

Shaft construction with or without permanent structures in them, shall be constructed in accordance with Section 02201 SHAFT CONSTRUCTION. The shaft locations are indicated on the construction drawings. The Contractor shall select his work method, and work with the Contracting Officer to best suit his equipment and pipe material keeping the project parameters in mind.

3.4.2 Trench Excavation

Any trench excavation adjacent to the microtunneling operations shall be in accordance with Section 02316 EXCAVATION, TRENCHING, AND BACKFILLING FOR UTILITIES SYSTEMS and Section 02201 SHAFT CONSTRUCTION.

3.4.3 Thrust Blocks

Use a thrust wall for pipe jacking that is properly designed and constructed. Position thrust wall normal to the proposed pipe alignment. Thrust wall shall be designed to support the maximum obtainable jacking pressure developed by the main jacking system. Special care shall be taken when setting the pipe glide rails or the jacking frame in the jacking shaft to ensure correctness of the alignment, grade, and stability. If a concrete thrust wall or treated soil zone is used, concrete or other materials shall have attained the required strength before jacking begins.

3.5 EXCAVATION AND JACKING OF PIPE

3.5.1 Thrust Blocks

Conduct tunneling operations in accordance with applicable safety rules and regulations and use methods that included due regard or safety of workmen, adjacent structures, utilities, and the public.

Keep tunnel excavation within the easements and rights-of-way indicated on the Drawings and to the lines and grades designated on the Drawings.

Locate equipment powered by combustible fuels at suitable distances from shafts and protect equipment to prevent the possibility of explosion and fire in the shafts of the drain pipes.

During excavation, carefully control volume of spoil removed

Advancing Shield. During forward movement of the shield, provide sufficient support at the excavation face to prevent loss of ground into the MTBM.

Size of Tunnel Excavation. Make the excavation of a minimum sufficient size to permit pipe installation by jacking with allowance for bentonite injection into the annular space. The maximum allowable overcut shall not be greater than (19 mm) larger in diameter than the outside diameter of the jacking pipe

3.5.2 Pipe Installation

Pipe installation shall be completed in accordance with approved shop drawings, and accepted submittals.

Provide a suitable jacking frame and thrust block to carry out the work. Provide intermediate-jacking stations if required to complete the required drives. Intermediate jacking stations shall be provided when the total anticipated jacking force needed to complete the drive might exceed the capacity of the main jacks or the maximum allowable jacking force on the pipe.

Prior to starting microtunneling operations, survey the location and orientation of pipe guide rails to ensure they are on the proper line and grade and verify that they are properly supported. Special care shall be

taken when setting the pipe guide rails in the jacking pit to ensure correctness of the alignment, grade and stability.

Pipe sections shall be handled and transported from the storage area to the jacking pit properly in accordance with the manufacturer's recommendations to avoid damage. Set the pipe to be jacked on properly braced and supported pipe guide rails, with the spigot end first and the bell end trailing. Join the two pipe sections together following this procedure:

Clean both ends of each pipe section and the joint components.

Apply joint lubricant to the bell interior surface and gaskets. Use only lubricants approved by the pipe manufacturer.

Use suitable equipment and end protection to push the pipes together.

Do not exceed forces recommended by the manufacturer for jointing or pushing pipe.

The axial forces from the thrust jacks shall be distributed to the pipe uniformly through properly designed thrust ring and cushion materials, as recommended by the pipe manufacturer, to prevent damage to the ends of the pipe. Jacking forces shall be applied uniformly to the pipe wall inside the bell and not to the bell itself. The jacking system shall be capable of continuously monitoring the jacking pressure and advance rate.

Pipes shall he jacked into position following the design line and grade of the pipeline without damaging the pipe. In the event a section of pipe is damaged during the jacking operation or joint failure occurs, the pipe shall be jacked through to the receiving pit and removed. Other methods of repairing the damaged pipe may be used, subject to the approval of the Contracting Officer.

Provide a lubrication system, and inject pipe lubricants through injection ports at the rear of the microtunneling machine and ports in the pipe as necessary, to minimize pipe friction. Pipe lubricants shall be injected continuously as the pipe is advanced. The volume injected shall not be less than that required to fill the annular void space outside the pipe. Inject greater volumes as required to minimize jacking forces.

Pressure applied at the tunnel face shall be maintained at all times between the measured active earth pressure and 50 percent of the estimated passive earth pressure. Pressure applied at the tunnel face to balance the groundwater shall be maintained at a level slightly in excess of normal hydrostatic pressure and shall be monitored continuously.

The microtunneling machine shall be operated so as to minimize both surface heave and loss of ground during microtunneling. Restrict the excavation of the materials to only those materials that are physically displaced by the shield itself in order to prevent loss of ground and settlement or possible damage to overlying structures. Control the advance rate and monitor the volume of material excavated and adjust advance rate, as required, to avoid loss of ground, overexcavation, and surface heave.

The machine shall be steered to maintain line and grade within the tolerance specified. This shall be achieved by continuously monitoring, line and grade, machine inclination, roll and steering altitude during the operation. As a minimum, thrust force, slurry chamber pressure, torque, rate of advance, distance along the drive, deviation from the line and

grade, roll, and steering adjustments shall be monitored and recorded for each pipe section installed.

Intermediate jacking stations, if required, shall consist of a series of jacks equally spaced inside a casing fabricated to the same outside diameter as the pipe circumference. The intermediate jacking stations shall be used to uniformly distribute the jacking force along the pipe string. Each intermediate jacking station shall push the group of pipe sections located between that station and the next station forward in the direction of the drive.

If the pipe "freezes'' and the Contractor is unable to move it again, the Contractor may be permitted to construct a recovery access shaft, with the location subject to review by the Contracting Officer. The Contractor shall be solely responsible for obtaining approvals for the emergency shaft and shall be solely responsible for costs associated with the location and construction of the shaft and for maintaining traffic and utilities in the area.

Following completion of the drive, remove the hydraulic jacks from the intermediate jacking station and close up the two adjacent pipe sections to provide a watertight seal. Disconnect all lubrication lines and replace plugs in lubrication ports removed during microtunneling.

3.5.3 Spoil Transport and Disposal

Use a slurry spoil transportation system for all microtunneling. Monitor slurry pressure and adjust as required to adequately balance soil and groundwater pressures. Control slurry pressure and avoid excessive pumping pressures to prevent the discharge of slurry at the ground surface. Clean up any slurry discharges immediately. Wash paved areas with water to avoid the tracking of slurry away from the discharge area.

Mechanical separation equipment shall be provided to remove the excavated soil from the slurry for disposal. Use shakers, vibrating screens, desanders, hydrocyclones, and centrifuges as required for effective spoil removal. Separation plant shall comply with the noise control requirements of SECTION 01430 ENVIRONMENTAL PROTECTION.

Transport and dispose of all excavated materials away from the construction sites. No stockpiling shall be permitted at the jacking pit sites. Slurry shall be pumped into tanker trucks and disposed of at acceptable facilities in accordance with current federal and state regulations for disposal of these materials.

3.5.4 Grouting

Completely fill voids outside the limits of the excavation created by cave-ins or collapse of earth cover over the excavation. The annular space created by the overcut of the MTBM in excess of (19 mm) shall be filled with an approved material such as pressure-injected sand cement grout.

Furnish and operate suitable equipment for any required grouting operations depending on the condition of the application.

Take care in grouting operations to prevent damage to adjacent utilities or other properties. Grout at a pressure that will not distort or imperil any portion of the work or existing installation or structures.

3.6 CONTROL OF LINE AND GRADE

3.6.1 Construction and Control

The Contractor shall establish the baseline and benchmarks and accurately indicate them on the drawings. Contractor shall verify the accuracy of these baseline and benchmarks at the beginning of the work and report any errors or discrepancies to the Contracting Officer.

The Contractor shall use the baseline and benchmarks established to furnish and maintain reference control lines and grades for the drain pipe construction. Use these lines and grades to establish the exact location of the tunnel excavation, drain pipe, and structures. A surveyor licensed in the State of Hawaii shall perform the surveys.

The Contractor shall establish and be responsible for accuracy of control for the construction of the entire project, including access shaft locations, structures, excavation, pipe alignment and grade.

Establish control points sufficiently far from the tunnel operation so as not to be affected by ground movement.

Record initial setup.

Laser shall be mounted independently from the thrust block and jacking frame to maintain the alignment of the laser. Stop microtunneling operations and reset laser, if laser alignment shifts or is moved off of design alignment and grade for any reason. Laser should only be reset by qualified surveying personnel in accordance with approved procedures.

Maintain daily surveying records of alignment and grade. Submit three copies of these records to Contracting Officer within 24 hours of the operation. The Contractor, however, remains fully responsible for the accuracy of this work and the correction of it, as required.

Check the primary control for the MTBM against an aboveground undisturbed reference at least once each week and once for each (76 m) of tunnel constructed, or more often as needed or directed by the Contracting Officer.

3.6.2 Earth Movement

The Contractor shall be responsible for damage due to settlement from any construction-induced activities.

Take precautions to avoid damage or settlement to the buildings, structures, roads, and utilities in close proximity to the work. Use of construction methods and equipment to minimize loss of earth at the excavation face and settlement or heave of earth around the sewer pipe.

The Contractor's detailed plan for monitoring ground surface movement shall be implemented for detecting earth movement.

In the event any movement of ground is detected, the Contracting Officer shall order the work stopped and secured. Before proceeding, the contractor shall correct any problems causing or resulting from such movement.

The Contractor shall be aware that if settlement of the ground surface should occur during construction which will affect the accuracy of the

temporary benchmarks established by the Contractor, it shall be the Contractor's responsibility to detect and report such movement. Advise the Contracting Officer of any settlement affecting the permanent monuments or benchmarks. Upon completion, the field books pertaining to monitoring of the permanent monuments or benchmarks shall be submitted to the Contracting Officer.

3.6.3 Line and Grade

Record the exact position of the MTBM at 50-foot intervals to ensure the alignment is within specified tolerances. Make the survey at the MTBM to allow immediate correction of misalignment before allowable tolerances are exceeded. The tunnel guidance system may be used however, the Contractor shall select times to measure and record this information after the air temperatures have stabilized throughout the pipe to ensure accurate readings or after 30 minutes of air blower activity of over 200 CFM.

When excavation is off line or grade, make alignment corrections to avoid a backfall in gravity drainlines. Steering corrections no greater than (25 mm in 7.6 m) shall be used.

Perform a verification survey of the installed drain pipe from shaft to shaft after removal of the MTBM. Document measured conformance to design line and grade of the pipe together with locations and deviation (distance and direction) of any out-of-tolerance locations.

Acceptance criteria for the drain pipe shall be 25 mm (1 inch) in horizontal alignment from the theoretical at any point between manholes, including the receiving end, and 25 mm (1 inch) in elevation from the vertical.

If allowable tolerances are exceeded; the Contractor shall bear full responsibility and expense for correction (redesign, reconstruction, easement acquisition, etc.).

If redesign is required, the Contractor shall obtain the services of a Professional Engineer registered in the State of Hawaii for the redesign. The installed pipe must be capable of meeting the design flow and velocities for a full pipe condition. Plans showing the changes shall be submitted to the Contracting Officer for review.

Drain pipe installed outside the tolerance or which are outside the Project right-of-way shall be removed and reconstructed within tolerance, as directed by the Contracting Office, at no additional cost to the Government.

3.7 MONITORING

3.7.1 Settlement Surveying

This specification establishes minimum settlement survey requirements for structures and ground surface monitoring points.

Submit a settlement surveying and monitoring plan for review 30 calendar days prior To performing any microtunneling or excavation work. The plan shall identify the methods, procedures and location or settlement monitoring points, reference benchmarks, survey schedules and procedures and reporting formats.

Surveying for monitoring surface settlement points shall be performed by a Land Survey or licensed in the State of Hawaii with previous experience surveying for the detection of structural deformations and surface movements.

Surface settlement points shall be established by an inscribed marking or approved surveyor's nail driven flush with the surface in asphalt or concrete paved areas. In landscaped areas, surface settlement points shall be established by driving a timber stake flush with the ground. Each control point shall have a tag or marking indicating the station and offset from centerline of the pipeline.

Use monuments sufficiently removed from the construction operations to avoid errors in reading due to ground settlement.

3.7.2 Surface Settlement Points

A minimum of two (2) settlement survey points shall be installed at each jacking, receiving and intermediate pit location. The settlement points shall be located within (1.52 m) of both pit edges parallel to the microtunneling pipe.

A three-point array of surface settlement points shall be established every 100 feet along the drain alignment. Relocate settlement points that cannot be safely surveyed as required by the Contracting Officer.

Locate settlement points on all structures within a distance equal to one and one-half times the depth of the shaft or pipe centerline, or as directed by the Contracting Officer.

Install settlement points and make initial surveying measurements prior to performing any shaft excavation and prior to any pipe installation. Thereafter, survey the elevation of the settlement points daily while microtunneling operations are within (30.48 m) of the settlement point, and at least once per week until all measurable subsidence stops. For shaft excavation, survey the elevation of settlement points weekly until the excavation is backfilled.

Reading frequency shall be increased as required by the Contracting Officer when construction is approaching or near critical structures (structures, bridge piers, pipelines, etc., partially or entirely located within a distance equal to one and one-half times the depth of tunnel but at least (7.6 m) in plan from the tunnel centerline).

Record the horizontal coordinates and elevations (with an accuracy of (3 mm)) for each survey point location. Reference survey points so that they may be accurately re-established if lost or destroyed.

Measure and maintain records of deformation as defined by the Contractor's monitoring plan.

Immediately report to the Contracting Officer any movement, cracking, or settlement which is detected and take immediate remedial action. The Contractor shall be fully responsible for any such damage to adjacent structures.

At the end of construction after the drain pipe is installed, and all tunnel shafts backfilled, make a final survey of all control points established for instrumentation and observation. The final readings shall

be submitted to the Contracting Office. **Make a visual inspection of all structures adjacent to the drain pipe and report to the Contracting Officer** the condition of the structures, any damage incurred during construction, and corrective action taken. End of construction survey shall take place 90 days after construction is completed to allow time to observe delayed ground response.

All surface settlement points shall be removed during the clean-up and site restoration work, as directed by the Contracting Officer.

For open trench excavations in ground water conditions this paragraph MONITORING shall be implemented in the monitoring of ground movement.

3.8 BUILDING AND STRUCTURE ASSESSMENT

The contractor shall submit for review prior to construction, a Building and Structures Assessment Plan. Pre-construction and post-construction assessment reports shall be provided for buildings and structures located within a distance equal to one and one-half (1-1/2 times) the depth of tunnel but at least (7.6 m) in plan from the proposed tunnel centerline and shafts or as directed by the Contracting Officer. Photographs and a video of any existing damage to structures in the vicinity of the sewer alignment shall be included in the assessment reports.

3.9 DISPOSAL OF EXCESS MATERIAL

Care shall be used in the transportation of the excavated material. **The Contractor shall remove the excavated material from the job site and dispose of properly outside of Government Property in accordance with the applicable Federal or State regulations.**

3.10 CONSTRUCTION AREA APPEARANCE

The Contractor shall throughout the duration of the project, keep all street, sidewalks and driveways, within the project limits, free from all debris produced from the project. The Contractor shall keep the project and surrounding areas neat and free from dust nuisance. The Contracting Officer may require supplementary measures as necessary.

Upon completion of each phase of the project, the Contractor shall immediately remove all excess material and thoroughly clean the affected area.

Upon completion of the work, the Contractor shall remove all equipment, signs and unused materials provided for the work and shall restore the project area to a neat and clean condition and do all the other required cleaning as specified above.

Should the Contractor fail to comply with the above provisions, the Contracting Officer may and without notice, have the cleaning done and deduct the cost of such work from any moneys due the Contractor under this contract.

-- End of Section --

SECTION TABLE OF CONTENTS

DIVISION 02 - SITE WORK

SECTION 02510

WATER DISTRIBUTION SYSTEM

PART 1 GENERAL

1.1 REFERENCES
1.2 PIPING
1.2.1 Service Lines
1.2.2 Distribution Lines 80 mm (3 Inches) or Larger
1.2.3 Plastic Piping System
1.2.4 Excavation, Trenching, and Backfilling
1.3 MANUFACTURER'S REPRESENTATIVE
1.4 SUBMITTALS
1.5 HANDLING
1.5.1 Polyethylene (PE) Pipe Fittings and Accessories
1.5.2 Miscellaneous Plastic Pipe and Fittings

PART 2 PRODUCTS

2.1 PIPE
2.1.1 Reinforced and Prestressed Concrete Pipe
2.1.2 Plastic Pipe
2.1.2.1 PE Plastic Pipe
2.1.2.2 PVC Plastic Pipe
2.1.3 Reinforced Plastic Mortar Pressure (RPMP) Pipe
2.1.4 Reinforced Thermosetting Resin Pipe (RTRP)
2.1.4.1 RTRP-I
2.1.4.2 RTRP-II
2.1.5 Ductile-Iron Pipe
2.1.6 Copper Tubing
2.2 FITTINGS AND SPECIALS
2.2.1 Reinforced Concrete Pipe System
2.2.2 PVC Pipe System
2.2.3 RTRP and RPMP Pipe
2.2.4 Ductile-Iron Pipe System
2.2.5 Copper Tubing System
2.3 JOINTS
2.3.1 Gaskets for Reinforced Concrete Pipe
2.3.2 Plastic Pipe Jointing
2.3.2.1 PE Pipe
2.3.2.2 PVC Pipe
2.3.2.3 PVCO Pipe
2.3.3 RPMP Pipe
2.3.4 RTRP Pipe
2.3.4.1 RTRP-I, Grade 1 and 2
2.3.4.2 RTRP-II, Grade 1 and 2
2.3.5 Ductile-Iron Pipe Jointing
2.3.6 Isolation Joints
2.3.7 Copper Tubing Jointing
2.4 VALVES

2.4.1 Check Valves
2.4.2 Gate Valves
2.4.3 Pressure Reducing Valves
2.4.4 Vacuum and Air Relief Valves
2.4.5 Indicator Post for Valves
2.5 VALVE BOXES
2.6 VALVE MANHOLES
2.7 FIRE HYDRANTS
2.8 MISCELLANEOUS ITEMS
2.8.1 Service Clamps
2.8.2 Corporation Stops
2.8.3 Goosenecks
2.8.4 Service Stops
2.8.5 Tapping Sleeves
2.8.6 Service Boxes
2.8.7 Disinfection
2.8.8 Meters
2.8.8.1 Vertical Turbine Type
2.8.9 Meter Boxes

PART 3 EXECUTION

3.1 INSTALLATION
3.1.1 Cutting of Pipe
3.1.2 Adjacent Facilities
3.1.2.1 Sewer Lines
3.1.2.2 Water Lines
3.1.2.3 Copper Tubing Lines
3.1.2.4 Nonferrous Metallic Pipe
3.1.2.5 Casing Pipe
3.1.2.6 Structures
3.1.3 Joint Deflection
3.1.3.1 Allowable for Reinforced Concrete Pipe
3.1.3.2 Offset for Flexible Plastic Pipe
3.1.3.3 Allowable for Ductile-Iron Pipe
3.1.4 Placing and Laying
3.1.4.1 Reinforced Concrete Pipe Installation
3.1.4.2 Plastic Pipe Installation
3.1.4.3 Piping Connections
3.1.4.4 Penetrations
3.1.4.5 Flanged Pipe
3.1.5 Jointing
3.1.5.1 Reinforced Concrete Pipe Requirements
3.1.5.2 PE Pipe Requirements
3.1.5.3 PVC Plastic Pipe Requirements
3.1.5.4 RTRP I, RTRP II and RPMP Pipe
3.1.5.5 Ductile-Iron Pipe Requirements
3.1.5.6 Isolation Joints and Dielectric Fittings
3.1.5.7 Transition Fittings
3.1.6 Installation of Service Lines
3.1.6.1 Service Lines 50 mm (2 Inches) and Smaller
3.1.6.2 Service Lines Larger than 50 mm (2 Inches)
3.1.6.3 Service Lines for Sprinkler Supplies
3.1.7 Setting of Fire Hydrants, Meters, Valves and Valve Boxes
3.1.7.1 Location of Fire Hydrants
3.1.7.2 Location of Meters
3.1.7.3 Location of Valves
3.1.7.4 Location of Service Boxes
3.1.8 Tapped Tees and Crosses

3.1.9 Hot Tapping
3.1.10 Thrust Restraint
3.1.10.1 Thrust Blocks
3.1.10.2 Restrained Joints
3.2 HYDROSTATIC TESTS
3.2.1 Pressure Test
3.2.2 Leakage Test
3.2.3 Time for Making Test
3.2.4 Concurrent Hydrostatic Tests
3.3 DISINFECTION
3.3.1 Bacteriological Disinfection
3.3.2 Lead Residual
3.4 CLEANUP

-- End of Section Table of Contents --

SECTION 02510

WATER DISTRIBUTION SYSTEM

PART 1 GENERAL

1.1 REFERENCES

The publications listed below form a part of this specification to the extent referenced. The publications are referred to in the text by basic designation only.

AMERICAN SOCIETY FOR TESTING AND MATERIALS (ASTM)

ASTM B 88	(1996) Seamless Copper Water Tube
ASTM C 76M	(1996) Reinforced Concrete Culvert, Storm Drain, and Sewer Pipe (Metric)
ASTM D 1599	(1988; R 1995) Short-Time Hydraulic Failure Pressure of Plastic Pipe, Tubing, and Fittings
ASTM D 1784	(1996) Rigid Poly(Vinyl Chloride) (PVC) Compounds and Chlorinated Poly(Vinyl Chloride) (CPVC) Compounds
ASTM D 1785	(1996a) Poly(Vinyl Chloride) (PVC) Plastic Pipe, Schedules 40, 80, and 120
ASTM D 2241	(1996a) Poly(Vinyl Chloride) (PVC) Pressure-Rated Pipe (SDR Series)
ASTM D 2464	(1996a) Threaded Poly(Vinyl Chloride) (PVC) Plastic Pipe Fittings, Schedule 80
ASTM D 2466	(1996a) Poly(Vinyl Chloride) (PVC) Plastic Pipe Fittings, Schedule 40
ASTM D 2467	(1996a) Poly(Vinyl Chloride) (PVC) Plastic Pipe Fittings, Schedule 80
ASTM D 2564	(1996a) Solvent Cements for Poly(Vinyl Chloride) (PVC) Plastic Piping Systems
ASTM D 2657	(1996) Heat Fusion Joining Polyolefin Pipe and Fittings
ASTM D 2774	(1994) Underground Installation of Thermoplastic Pressure Piping
ASTM D 2855	(1996) Making Solvent-Cemented Joints with Poly(Vinyl Chloride) (PVC) Pipe and Fittings

ASTM D 2996	(1995) Filament-Wound "Fiberglass" (Glass-Fiber-Reinforced Thermosetting-Resin) Pipe
ASTM D 2997	(1995) Centrifugally Cast "Fiberglass" (Glass-Fiber-Reinforced-Thermosetting-Resin) Pipe
ASTM D 3139	(1996a) Joints for Plastic Pressure Pipes Using Flexible Elastomeric Seals
ASTM D 3839	(1994a) Underground Installation of "Fiberglass" (Glass-Fiber-Reinforced Thermosetting Resin) Pipe
ASTM F 477	(1995) Elastomeric Seals (Gaskets) for Joining Plastic Pipe

AMERICAN SOCIETY OF MECHANICAL ENGINEERS (ASME)

ASME B1.20.1	(1983; R 1992) Pipe Threads, General Purpose (Inch)
ASME B16.1	(1989) Cast Iron Pipe Flanges and Flanged Fittings
ASME B16.26	(1988) Cast Copper Alloy Fittings for Flared Copper Tubes

AMERICAN WATER WORKS ASSOCIATION (AWWA)

AWWA B300	(1992) Hypochlorites
AWWA B301	(1992) Liquid Chlorine
AWWA C104	(1995) Cement-Mortar Lining for Ductile-Iron Pipe and Fittings for Water
AWWA C105	(1993) Polyethylene Encasement for Ductile-Iron Pipe Systems
AWWA C110	(1993) Ductile-Iron and Gray-Iron Fittings, 3 In. Through 48 In. (75# mm through 1200# mm), for Water and Other Liquids
AWWA C111	(1995) Rubber-Gasket Joints for Ductile-Iron Pressure Pipe and Fittings
AWWA C115	(1994) Flanged Ductile-Iron Pipe With Ductile-Iron or Gray-Iron Threaded Flanges
AWWA C151	(1996) Ductile-Iron Pipe, Centrifugally Cast, for Water or Other Liquids
AWWA C153	(1994; Errata Nov 1996) Ductile-Iron Compact Fittings, 3 In. Through 24 In. (76 mm through 610 mm) and 54 In. through 64

	In. (1,400 mm through 1,600 mm) for Water Service Liquids
AWWA C300	(1989) Reinforced Concrete Pressure Pipe, Steel-Cylinder Type, for Water and Other Liquids
AWWA C301	(1992) Prestressed Concrete Pressure Pipe, Steel-Cylinder Type, for Water and Other Liquids
AWWA C303	(1995) Concrete Pressure Pipe, Bar-Wrapped, Steel Cylinder Type
AWWA C500	(1993; C500a) Metal-Sealed Gate Valves for Water Supply Service
AWWA C503	(1988) Wet-Barrel Fire Hydrants
AWWA C509	(1994) Resilient-Seated Gate Valves for Water Supply Service
AWWA C600	(1993) Installation of Ductile-Iron Water Mains and Their Appurtenances
AWWA C606	(1987) Grooved and Shouldered Joints
AWWA C651	(1992) Disinfecting Water Mains
AWWA C701	(1988) Cold-Water Meters - Turbine Type, for Customer Service
AWWA C707	(1982; R 1992) Encoder-Type Remote-Registration Systems for Cold-Water Meters
AWWA C800	(1989) Underground Service Line Valves and Fittings
AWWA C900	(1989; C900a) Polyvinyl Chloride (PVC) Pressure Pipe, 4 In. Through 12 In., for Water Distribution
AWWA C901	(1996) Polyethylene (PE) Pressure Pipe and Tubing, 1/2 In. Through 3 In., for Water Service
AWWA C905	(1988) Polyvinyl Chloride (PVC) Water Transmission Pipe, Nominal Diameters 14 In. Through 36 In.
AWWA C950	(1995) Fiberglass Pressure Pipe
AWWA M23	(1980) Manual: PVC Pipe - Design and Installation

DUCTILE IRON PIPE RESEARCH ASSOCIATION (DIPRA)

DIPRA-01	(1997) Thrust Restraint Design for Ductile

Iron Pipe

MANUFACTURERS STANDARDIZATION SOCIETY OF THE VALVE AND FITTINGS INDUSTRY (MSS)

MSS SP-80	(1997) Bronze Gate, Globe, Angle and Check Valves

NATIONAL FIRE PROTECTION ASSOCIATION (NFPA)

NFPA 24	(1995) Installation of Private Fire Service Mains and Their Appurtenances
NFPA 49	(1994) Hazardous Chemicals Data
NFPA 325-1	(1994) Fire Hazard Properties of Flammable Liquids, Gases, and Volatile Solids
NFPA 704	(1996) Identification of the Fire Hazards of Materials for Emergency Response

NSF INTERNATIONAL (NSF)

NSF ANSI/NSF 14	(1996) Plastics Piping Components and Related Materials

STEEL STRUCTURES PAINTING COUNCIL (SSPC)

SSPC Paint 21	(1991) White or Colored Silicone Alkyd Paint
SSPC Paint 25	(1991) Red Iron Oxide, Zinc Oxide, Raw Linseed Oil and Alkyd Primer (Without Lead and Chromate Pigments)

1.2 PIPING

This section covers water distribution and service lines, and connections to building service at a point approximately 1.5 m (5 feet) outside buildings and structures to which service is required. The Contractor shall have a copy of the manufacturer's recommendations for each material or procedure to be utilized available at the construction site at all times.

1.2.1 Service Lines

Piping for water service lines less than 80 mm (3 inches) in diameter shall be polyvinyl chloride (PVC) plastic, Oriented PVC plastic polyethylene, or copper tubing, unless otherwise shown or specified. Piping for water service lines 80 mm (3 inches) and larger shall be ductile iron, polyvinyl chloride (PVC) plastic, filament-wound or centrifugally cast reinforced thermosetting resin or reinforced plastic mortar pressure pipe, unless otherwise shown or specified.

1.2.2 Distribution Lines 80 mm (3 Inches) or Larger

Piping for water distribution lines 80 mm (3 inches) or larger shall be ductile iron, polyvinyl chloride (PVC) through 320 mm (12 inch) nominal diameter plastic, Oriented PVC plastic filament-wound or centrifugally cast reinforced thermosetting resin, reinforced plastic mortar pressure pipe, or

reinforced concrete, unless otherwise shown or specified. For water reservoir project, piping shall be ductile iron.

1.2.3 Plastic Piping System

Plastic piping system components (PVC, polyethylene, thermosetting resin and reinforced plastic mortar pressure) intended for transportation of potable water shall comply with NSF ANSI/NSF 14 and be legibly marked with their symbol.

1.2.4 Excavation, Trenching, and Backfilling

Excavation, trenching, and backfilling shall be in accordance with the applicable provisions of Section 02316 EXCAVATION, TRENCHING, AND BACKFILLING FOR UTILITIES SYSTEMS, except as modified herein.

1.3 MANUFACTURER'S REPRESENTATIVE

The Contractor shall have a manufacturer's field representative present at the jobsite during the installation and testing of PE, RTRP, and/or RPMP pipe to provide technical assistance and to verify that the materials are being installed in accordance with the manufacturer's prescribed procedures. When the representative feels that the Contractor is installing and testing the PE, RTRP, and/or RPMP pipe in a satisfactory manner, certification shall be written to note which individuals employed by the Contractor are capable of properly installing the pipe. The field representative shall advise the Contractor of unsatisfactory conditions immediately when they occur. Such conditions include improper diameter of pipe ends, damaged interior liner, poorly prepared joints, improper curing of joints, moving pipe before joints are cured, bending pipe to follow abrupt changes in trench contours, leaving pipe ends open in trench overnight, not properly drying joints after rain storms, exceeding effective adhesive life, sharp objects in trench bed, backfill that could damage pipe, improper procedure for concrete encasement of pipe, omission of thrust blocks at changes in direction or any other condition which could have an adverse effect on the satisfactory completion and operation of the piping system.

1.4 SUBMITTALS

Government approval is required for submittals with a "GA" designation; submittals having an "FIO" designation are for information only. The following shall be submitted in accordance with Section 01330 SUBMITTAL PROCEDURES:

SD-06 Instructions

Installation; FIO.

The manufacturer's recommendations for each material or procedure to be utilized.

SD-08 Statements

Waste Water Disposal Method; FIO.

The method proposed for disposal of waste water from hydrostatic tests and disinfection, prior to performing hydrostatic tests.

Satisfactory Installation; FIO.

A statement signed by the principal officer of the contracting firm stating that the installation is satisfactory and in accordance with the contract drawings and specifications, and the manufacturer's prescribed procedures and techniques, upon completion of the project and before final acceptance.

SD-09 Reports

Bacteriological Disinfection; FIO.

Test results from commercial laboratory verifying disinfection.

SD-13 Certificates

Manufacturer's Representative; FIO.

The name and qualifications of the manufacturer's representative and written certification from the manufacturer that the representative is technically qualified in all phases of PE, RTRP, and/or RPMP pipe laying and jointing and experienced to supervise the work and train the Contractor's field installers, prior to commencing installation.

Installation; FIO.

A statement signed by the manufacturer's field representative certifying that the Contractor's personnel are capable of properly installing the pipe on the project.

Meters; FIO.

Manufacturer's certificate stating that each meter furnished has been tested for accuracy of registration and compliance with the accuracy and capacity requirements of the appropriate AWWA standard.

1.5 HANDLING

Pipe and accessories shall be handled to ensure delivery to the trench in sound, undamaged condition, including no injury to the pipe coating or lining. If the coating or lining of any pipe or fitting is damaged, the repair shall be made by the Contractor in a satisfactory manner, at no additional cost to the Government. No other pipe or material shall be placed inside a pipe or fitting after the coating has been applied. Pipe shall be carried into position and not dragged. Use of pinch bars and tongs for aligning or turning pipe will be permitted only on the bare ends of the pipe. The interior of pipe and accessories shall be thoroughly cleaned of foreign matter before being lowered into the trench and shall be kept clean during laying operations by plugging or other approved method. Before installation, the pipe shall be inspected for defects. Material found to be defective before or after laying shall be replaced with sound material without additional expense to the Government. Rubber gaskets that are not to be installed immediately shall be stored in a cool and dark place.

1.5.1 Polyethylene (PE) Pipe Fittings and Accessories

PE pipe, fittings, and accessories shall be handled in conformance with AWWA C901.

1.5.2 Miscellaneous Plastic Pipe and Fittings

Polyvinyl Chloride (PVC), Reinforced Thermosetting Resin Pipe (RTRP), and Reinforced Plastic Mortar Pressure (RPMP) pipe and fittings shall be handled and stored in accordance with the manufacturer's recommendations. Storage facilities shall be classified and marked in accordance with NFPA 704, with classification as indicated in NFPA 49 and NFPA 325-1.

PART 2 PRODUCTS

2.1 PIPE

Pipe shall conform to the respective specifications and other requirements specified below.

2.1.1 Reinforced and Prestressed Concrete Pipe

Steel cylinder reinforced concrete pipe shall conform to AWWA C300, AWWA C301, or AWWA C303 and shall be designed to withstand a working pressure of not less than 1.03 MPa (150 psi) unless otherwise shown or specified.

2.1.2 Plastic Pipe

2.1.2.1 PE Plastic Pipe

Pipe, tubing, and heat-fusion fittings shall conform to AWWA C901.

2.1.2.2 PVC Plastic Pipe

Pipe, couplings and fittings shall be manufactured of material conforming to ASTM D 1784, Class 12454B.

a. Pipe Less Than 100 mm (4 inch) Diameter:

(1) Screw-Joint: Pipe shall conform to dimensional requirements of ASTM D 1785 Schedule 80, with joints meeting requirements of 1.03 MPa (150 psi) working pressure, 1.38 MPa (200 psi) hydrostatic test pressure, unless otherwise shown or specified. Pipe couplings when used, shall be tested as required by ASTM D 2464.

(2) Elastomeric-Gasket Joint: Pipe shall conform to dimensional requirements of ASTM D 1785 Schedule 40, with joints meeting the requirements of 1.03 MPa (150 psi) working pressure, 1.38 MPa (200 psi) hydrostatic test pressure, unless otherwise shown or specified, or it may be pipe conforming to requirements of ASTM D 2241, elastomeric joint, with the following applications:

SDR	Maximum Working Pressure MPa	Minimum Hydrostatic Pressure MPa
26	0.689	0.917
21	0.827	1.103
17	1.034	1.379
13.5	1.379	1.834

(3) Solvent Cement Joint: Pipe shall conform to dimensional

requirements of ASTM D 1785 or ASTM D 2241 with joints meeting the requirements of 1.03 MPa (150 psi) working pressure and 1.38 MPa (200 psi) hydrostatic test pressure.

b. Pipe 100 through 300 mm Diameter: Pipe, couplings and fittings shall conform to AWWA C900, Class 150, CIOD pipe dimensions, elastomeric-gasket joint, unless otherwise shown or specified.

c. Pipe 350 through 900 mm Diameter: Pipe shall conform to AWWA C905 unless otherwise shown or specified.

2.1.3 Reinforced Plastic Mortar Pressure (RPMP) Pipe

AWWA C950.

2.1.4 Reinforced Thermosetting Resin Pipe (RTRP)

Pipe shall have a quick-burst strength greater than or equal to four times the normal working pressure of the pipe. The quick-burst strength test shall conform to the requirements of ASTM D 1599.

2.1.4.1 RTRP-I

RTRP-I shall conform to ASTM D 2996, except pipe shall have an outside diameter equal to cast iron outside diameter or standard weight steel pipe. The pipe shall be suitable for a normal working pressure of 1.03 MPa (150 psi) at 23 degrees C. The inner surface of the pipe shall have a smooth uniform continuous resin-rich surface liner conforming to ASTM D 2996.

2.1.4.2 RTRP-II

RTRP-II shall conform to ASTM D 2997. Pipe shall have an outside diameter equal to standard weight steel pipe.

2.1.5 Ductile-Iron Pipe

Ductile-iron pipe shall conform to AWWA C151, working pressure not less than 1.03 MPa (150 psi), unless otherwise shown or specified. Pipe shall be cement-mortar lined in accordance with AWWA C104. Linings shall be standard. When installed underground, pipe shall be encased with 8 mm thick polyethylene in accordance with AWWA C105. Flanged ductile iron pipe with threaded flanges shall be in accordance with AWWA C115.

2.1.6 Copper Tubing

Copper tubing shall conform to ASTM B 88, Type K, annealed.

2.2 FITTINGS AND SPECIALS

2.2.1 Reinforced Concrete Pipe System

Fittings and specials required for closures, curves, bends, branches and connections to valves, pipe, or structures shall be approved by the Contracting Officer and conform to the details furnished by the manufacturer and to AWWA C300, AWWA C301, or AWWA C303, as applicable.

2.2.2 PVC Pipe System

a. For pipe less than 100 mm (4 inch) diameter, fittings for

threaded pipe shall conform to requirements of ASTM D 2464, threaded to conform to the requirements of ASME B1.20.1 for use with Schedule 80 pipe and fittings; fittings for solvent cement jointing shall conform to ASTM D 2466 or ASTM D 2467; and fittings for elastomeric-gasket joint pipe shall be iron conforming to AWWA C110 or AWWA C111. Iron fittings and specials shall be cement-mortar lined (standard thickness) in accordance with AWWA C104.

b. For pipe 100 mm (4 inch) diameter and larger, fittings and specials shall be iron, bell end in accordance with AWWA C110, 1.03 MPa (150 psi) pressure rating unless otherwise shown or specified, except that profile of bell may have special dimensions as required by the pipe manufacturer; or fittings and specials may be of the same material as the pipe with elastomeric gaskets, all in conformance with AWWA C900. Iron fittings and specials shall be cement-mortar lined (standard thickness) in accordance with AWWA C104. Fittings shall be bell and spigot or plain end pipe, or as applicable. Ductile iron compact fittings shall be in accordance with AWWA C153.

c. PVC Fittings for PVC pipe up to 200 mm (8 inch) in size shall conform to AWWA C907.

2.2.3 RTRP and RPMP Pipe

Fittings and specials shall be compatible with the pipe supplied. Filament wound or molded fittings up to 150 mm (6 inches) shall conform to AWWA C950. Iron fittings shall be cement-mortar lined in accordance with AWWA C104 and shall conform to AWWA C110 and AWWA C111. Fittings shall be suitable for working and testing pressures specified for the pipe.

2.2.4 Ductile-Iron Pipe System

Fittings and specials shall be suitable for 1.03 MPa (150 psi) pressure rating, unless otherwise specified. Fittings and specials for mechanical joint pipe shall conform to AWWA C110. Fittings and specials for use with push-on joint pipe shall conform to AWWA C110 and AWWA C111. Fittings and specials for grooved and shouldered end pipe shall conform to AWWA C606. Fittings and specials shall be cement-mortar lined (standard thickness) in accordance with AWWA C104. Ductile iron compact fittings shall conform to AWWA C153.

2.2.5 Copper Tubing System

Fittings and specials shall be flared and conform to ASME B16.26.

2.3 JOINTS

2.3.1 Gaskets for Reinforced Concrete Pipe

Rubber-gasket joints shall be of the type using a bell-and-spigot joint design of steel. The gaskets shall conform to AWWA C300, AWWA C301, or AWWA C303, as applicable.

2.3.2 Plastic Pipe Jointing

2.3.2.1 PE Pipe

Joints for pipe fittings and couplings shall be strong tight joints as specified for PE in Paragraph INSTALLATION. Joints connecting pipe of differing materials shall be made in accordance with the manufacturer's recommendation, and as approved by the Contracting Officer.

2.3.2.2 PVC Pipe

Joints, fittings, and couplings shall be as specified for PVC pipe. Joints connecting pipe of differing materials shall be made in accordance with the manufacturer's recommendations, and as approved by the Contracting Officer.

2.3.2.3 PVCO Pipe

Joints shall conform to ASTM D 3139. Elastomeric gaskets shall conform to ASTM F 477.

2.3.3 RPMP Pipe

Joints shall be mechanical or bell and spigot type with elastomeric gasket.

2.3.4 RTRP Pipe

2.3.4.1 RTRP-I, Grade 1 and 2

Joints shall be bell and spigot with elastomeric gasket, mechanical coupling with elastomeric gasket, threaded and bonded coupling, or tapered bell and spigot with compatible adhesive. All RTRP-I materials shall be products of a single manufacturer.

2.3.4.2 RTRP-II, Grade 1 and 2

Joints shall be the bell and spigot type with elastomeric gasket, bell and spigot with adhesive, butt-jointed with adhesive bonded reinforced overlay, mechanical, flanged, threaded or commercially available proprietary joints, provided they are capable of conveying water at the pressure and temperature of the pipe.

2.3.5 Ductile-Iron Pipe Jointing

a. Mechanical joints shall be of the stuffing box type and shall conform to AWWA C111.

b. Push-on joints shall conform to AWWA C111.

c. Rubber gaskets and lubricants shall conform to the applicable requirements of AWWA C111.

2.3.6 Isolation Joints

Isolation joints shall be installed between nonthreaded ferrous and nonferrous metallic pipe, fittings and valves. Isolation joints shall consist of a sandwich-type flange isolation gasket of the dielectric type, isolation washers, and isolation sleeves for flange bolts. Isolation gaskets shall be full faced with outside diameter equal to the flange outside diameter. Bolt isolation sleeves shall be full length. Units shall be of a shape to prevent metal-to-metal contact of dissimilar metallic piping elements.

a. Sleeve-type couplings shall be used for joining plain end pipe

sections. The two couplings shall consist of one steel middle ring, two steel followers, two gaskets, and the necessary steel bolts and nuts to compress the gaskets.

b. Split-sleeve type couplings may be used in aboveground installations when approved in special situations and shall consist of gaskets and a housing in two or more sections with the necessary bolts and nuts.

2.3.7 Copper Tubing Jointing

Joints shall be compression-pattern flared and shall be made with the specified fittings.

2.4 VALVES

2.4.1 Check Valves

Check valves shall be designed for a minimum working pressure of 1.03 MPa (150 psi) or as indicated. Valves shall have a clear waterway equal to the full nominal diameter of the valve. Valves shall open to permit flow when inlet pressure is greater than the discharge pressure, and shall close tightly to prevent return flow when discharge pressure exceeds inlet pressure. The size of the valve, working pressure, manufacturer's name, initials, or trademark shall be cast on the body of each valve. Valves 50 mm (2 inches) and larger shall be outside lever and spring.

Valves larger than 50 mm (2 inches) shall be iron body, bronze mounted, shall have flanged ends, and shall be the non-slam type. Flanges shall be the Class 125 type conforming to ASME B16.1.

2.4.2 Gate Valves

Gate valves shall be designed for a working pressure of not less than 1.03 MPa (150 psi). Valve connections shall be as required for the piping in which they are installed. Valves shall have a clear waterway equal to the full nominal diameter of the valve, and shall be opened by turning counterclockwise. The operating nut or wheel shall have an arrow, cast in the metal, indicating the direction of opening.

a. Valves smaller than 80 mm (3 inches) shall be all bronze and shall conform to MSS SP-80, Type 1, Class 150.

b. Valves 80 mm (3 inches) and larger shall be iron body, bronze mounted, and shall conform to AWWA C500. Flanges shall not be buried. An approved pit shall be provided for all flanged connections.

c. Resilient-Seated Gate Valves: For valves 80 to 300 mm (3 to 12 inches) in size, resilient-seated gate valves shall conform to AWWA C509.

2.4.3 Pressure Reducing Valves

Pressure reducing valves shall maintain a constant downstream pressure regardless of fluctuations in demand. Valves shall be suitable for 105 MPa operating pressure on the inlet side, with outlet pressure set for 70 MPa. The valves shall be of the hydraulically-operated, pilot controlled, globe or angle type, and may be actuated either by diaphragm or piston.

The pilot control shall be the diaphragm-operated, adjustable, spring-loaded type, designed to permit flow when controlling pressure exceeds the spring setting. Ends shall be flanged. Valve bodies shall be bronze, cast iron or cast steel with bronze trim. Valve stem shall be stainless steel. Valve discs and diaphragms shall be synthetic rubber. Valve seats shall be bronze. Pilot controls shall be bronze with stainless steel working parts.

2.4.4 Vacuum and Air Relief Valves

Vacuum and air relief valves shall be of the size shown and shall be of a type that will release air and prevent the formation of a vacuum. The valves shall automatically release air when the lines are being filled with water and shall admit air into the line when water is being withdrawn in excess of the inflow. Valves shall be iron body with bronze trim and stainless steel float.

2.4.5 Indicator Post for Valves

Each valve shown on the drawings with the designation "P.I.V." shall be equipped with indicator post conforming to the requirements of NFPA 24. Operation shall be by a wrench which shall be attached to each post.

2.5 VALVE BOXES

Valve boxes shall be cast iron. Cast-iron boxes shall be extension type with slide-type adjustment and with flared base. The minimum thickness of metal shall be 5 mm. The word "WATER" shall be cast in the cover. The box length shall adapt, without full extension, to the depth of cover required over the pipe at the valve location. Cast-iron boxes and covers shall be coated with an approved coal-tar coating compound. Coating shall be bituminous solvent coal tar base applied at approximately 20 mils dry film thickness.

2.6 VALVE MANHOLES

Valve manholes shall be constructed at locations indicated or as required above and in accordance with the details shown. Concrete shall have compressive strength of 21 MPa in accordance with Section 03300 CAST-IN-PLACE STRUCTURAL CONCRETE.

2.7 FIRE HYDRANTS

Hydrants shall be wet-barrel type conforming to AWWA C503, with either an automatic breakoff check valve or an auxiliary gate valve on hydrant branch. Hydrants shall have a 150 mm (6 inch) bell connection, two 65 mm (2-1/2 inch) hose connections and one 115 mm (4-1/2 inch) pumper connection. Outlets shall have American National Standard fire-hose coupling threads. Working parts shall be bronze. Design, material, and workmanship shall be equal to the latest stock pattern ordinarily produced by the manufacturer. Hydrants shall be painted with 1 coat of red iron oxide, zinc oxide primer conforming to SSPC Paint 25 and 2 finish coats of silicone alkyd paint conforming to SSPC Paint 21. Color shall be Norwood Brown. Appropriate quick-coupler for the 115 mm (4 1/2 inch) outlet shall be furnished.

2.8 MISCELLANEOUS ITEMS

2.8.1 Service Clamps

Service clamps shall have a pressure rating not less than that of the pipe to be connected and shall be either the single or double flattened strap type. Clamps shall have a galvanized malleable-iron body with cadmium plated straps and nuts. Clamps shall have a rubber gasket cemented to the body.

2.8.2 Corporation Stops

Corporation stops shall have standard corporation stop thread conforming to AWWA C800 on the inlet end, with flanged joints, compression pattern flared tube couplings, or wiped joints for connections to goosenecks.

2.8.3 Goosenecks

Copper tubing for gooseneck connections shall conform to the applicable requirements of ASTM B 88, Type K, annealed. Length of cable requirement connections shall be in accordance with standard practice.

2.8.4 Service Stops

Service stops shall be water-works inverted-ground-key type, oval or round flow way, tee handle, without drain. Pipe connections shall be suitable for the type of service pipe used. All parts shall be of bronze with female iron-pipe-size connections or compression-pattern flared tube couplings, and shall be designed for a hydrostatic test pressure not less than 1.375 MPa (200 psi).

2.8.5 Tapping Sleeves

Tapping sleeves of the sizes indicated for connection to existing main shall be the cast gray, ductile, or malleable iron, split-sleeve type with flanged or grooved outlet, and with bolts, follower rings and gaskets on each end of the sleeve. Construction shall be suitable for a maximum working pressure of 1.03 MPa. Bolts shall have square heads and hexagonal nuts. Longitudinal gaskets and mechanical joints with gaskets shall be as recommended by the manufacturer of the sleeve. When using grooved mechanical tee, it shall consist of an upper housing with full locating collar for rigid positioning which engages a machine-cut hole in pipe, encasing an elastomeric gasket which conforms to the pipe outside diameter around the hole and a lower housing with positioning lugs, secured together during assembly by nuts and bolts as specified, pretorqued to 67.8 Newton meters (50 foot-pound).

2.8.6 Service Boxes

Service boxes shall be cast iron or concrete and shall be extension service boxes of the length required for the depth of the line, with either screw or slide-type adjustment. The boxes shall have housings of sufficient size to completely cover the service stop or valve and shall be complete with identifying covers. Cast-Iron, Service boxes and covers shall be coated with coal-tar compound. Coating thickness shall be approximately 20 mils dry film.

2.8.7 Disinfection

Chlorinating materials shall conform to the following:

Chlorine, Liquid: AWWA B301.

Hypochlorite, Calcium and Sodium: AWWA B300.

2.8.8 Meters

Meters shall be the type and size as specified below. Meters furnished and installed shall be supplied by one manufacturer.

2.8.8.1 Vertical Turbine Type

Vertical turbine type meters shall conform to AWWA C701 (Class II). The main casing shall be bronze with stainless steel external fasteners. Registers shall be straight-reading type, shall be permanently sealed and shall read in U.S. gallons. Digital indicator-totalizer shall be sealed and magnetically coupled with the driving mechanism. A leak detector hand shall be provided to indicate very low flow (due to leakage). Connections shall be suitable to the type of pipe and conditions encountered. Register type shall be an encoder-type remote register designed in accordance with AWWA C707. Remote mounting adapter kit with up to 15.24m (50') of cable (see Utility Plan for Remote Sensor location to determine length of cable required) shall be used to connect the water meter to the remote sensor on the building indicated (see Utility Plan for location of water meter & Remote Sensor). Meters shall comply with the accuracy and capacity requirements of AWWA C701.

2.8.9 Meter Boxes

Meter boxes shall be of cast iron or concrete. The boxes shall be of sufficient size to completely enclose the meter and shutoff valve or service stop. Meter boxes set in paved areas subject to vehicular traffic shall be cast iron, or concrete with cast iron lid and cast iron meter reader lid. Boxes set in sidewalks, not subject to vehicular traffic, shall be concrete with cast iron lid and cast iron meter reader lid. Plastic boxes and lids shall not be used. Box height shall extend from invert of the meter to final grade at the meter location. The lid shall have the word "WATER" cast in it.

PART 3 EXECUTION

3.1 INSTALLATION

3.1.1 Cutting of Pipe

Cutting of pipe shall be done in a neat and workmanlike manner without damage to the pipe. Unless otherwise recommended by the manufacturer and authorized by the Contracting Officer, cutting shall be done with an approved type mechanical cutter. Wheel cutter shall be used when practicable. Copper tubing shall be cut square and all burrs shall be removed. Squeeze type mechanical cutters shall not be used for ductile iron.

3.1.2 Adjacent Facilities

3.1.2.1 Sewer Lines

Where the location of the water pipe is not clearly defined in dimensions on the drawings, the water pipe shall not be laid closer horizontally than 3 m from a sewer except where the bottom of the water pipe will be at least 300 mm above the top of the sewer pipe, in which case the water pipe

shall not be laid closer horizontally than 1.8 m from the sewer. Where water lines cross under gravity-flow sewer lines, the sewer pipe, for a distance of at least 3 m each side of the crossing, shall be fully encased in concrete or shall be made of pressure pipe with no joint located within 900 mm horizontally of the crossing. Water lines shall in all cases cross above sewage force mains or inverted siphons and shall be not less than 600 mm above the sewer main. Joints in the sewer main, closer horizontally than 900 mm to the crossing, shall be encased in concrete.

3.1.2.2 Water Lines

Water lines shall not be laid in the same trench with sewer lines, gas lines, fuel lines, or electric wiring.

3.1.2.3 Copper Tubing Lines

Copper tubing shall not be installed in the same trench with ferrous piping materials.

3.1.2.4 Nonferrous Metallic Pipe

Where nonferrous metallic pipe, e.g. copper tubing, crosses any ferrous piping material, a minimum vertical separation of 300 mm shall be maintained between pipes.

3.1.2.5 Casing Pipe

Water pipe shall be encased in a sleeve of rigid conduit if required in paragraph Structures. When sleeves are required, the pipe sleeve shall be reinforced concrete pipe for storm drains in accordance with ASTM C 76M, Class V as specified in Section 02630 STORM-DRAINAGE SYSTEM. A minimum clearance of at least 100 mm (4 inch) between the inner wall of the sleeve and the maximum outside diameter of the sleeved pipe and joints shall be provided. Sand bedding or suitable pipe support shall be provided for the water pipe through the sleeve.

3.1.2.6 Structures

Where water pipe is required to be installed within 1 m (40 inch) of existing or new structures, the water pipe shall be sleeved as required in Paragraph "Casing Pipe". The Contractor shall install the water pipe and sleeve ensuring that there will be no damage to the structures and no settlement or movement of foundations or footings.

3.1.3 Joint Deflection

3.1.3.1 Allowable for Reinforced Concrete Pipe

Maximum allowable deflections from a straight line or grade, as required by vertical curves, horizontal curves, or offsets, shall be 5 degrees for reinforced concrete pipe unless a lesser amount is recommended by the manufacturer. Long radius curves in reinforced concrete pipe shall be formed by straight pipe in which spigot rings are placed on a bevel. Slight deflections may be made by straight pipe, provided that the maximum joint opening caused by such deflection does not exceed the maximum recommended by the pipe manufacturer. Short radius curves and closures shall be formed by shorter lengths of pipe, bevels, or fabricated specials specified.

3.1.3.2 Offset for Flexible Plastic Pipe

Maximum offset in alignment between adjacent pipe joints shall be as recommended by the manufacturer and approved by the Contracting Officer, but shall not exceed 5 degrees.

3.1.3.3 Allowable for Ductile-Iron Pipe

The maximum allowable deflection shall be as given in AWWA C600. If the alignment requires deflection in excess of the above limitations, special bends or a sufficient number of shorter lengths of pipe shall be furnished to provide angular deflections within the limit set forth.

3.1.4 Placing and Laying

Pipe and accessories shall be carefully lowered into the trench by means of derrick, ropes, belt slings, or other authorized equipment. Water-line materials shall not be dropped or dumped into the trench. Abrasion of the pipe coating shall be avoided. Except where necessary in making connections with other lines or as authorized by the Contracting Officer, pipe shall be laid with the bells facing in the direction of laying. The full length of each section of pipe shall rest solidly upon the pipe bed, with recesses excavated to accommodate bells, couplings, and joints. Pipe that has the grade or joint disturbed after laying shall be taken up and relaid. Pipe shall not be laid in water or when trench conditions are unsuitable for the work. Water shall be kept out of the trench until joints are complete. When work is not in progress, open ends of pipe, fittings, and valves shall be securely closed so that no trench water, earth, or other substance will enter the pipes or fittings. Where any part of the coating or lining is damaged, the repair shall be made by and at the Contractor's expense in a satisfactory manner. Pipe ends left for future connections shall be valved, plugged, or capped, and anchored, as shown and location suitably staked or marked (as approved by the Contracting Officer).

3.1.4.1 Reinforced Concrete Pipe Installation

Reinforced concrete pipe shall be installed in accordance with recommendations of the pipe manufacturer. Before laying reinforced concrete pipe, the outside surface of the spigot and the inside surface of the bell shall be cleaned and an acceptable vegetable-compound lubricant applied to the inside surface of the bell and to the rubber gasket. Where prescribed by the pipe manufacturer, the gasket shall be placed in the groove on the end of the pipe before the pipe is placed in the trench. After the pipe has been forced together, the position of the rubber gasket shall be checked with a feeler gauge in accordance with the pipe manufacturer's recommendations. Tapping of reinforced concrete cylinder pipe shall be done in accordance with the manufacturer's approved recommendations. Where the manufacturer recommends that the taps be made by attaching the rubber-gasketed saddle to the outside of the pipe using U-bolts, the saddle shall be grouted in if necessary, the mortar coating shall be chipped away, even with the hole in the saddle plate. The exposed circumferential wires shall be removed and the cylinder and concrete core drilled out, and the steel saddle and U-bolts shall be protected by concrete encasement.

3.1.4.2 Plastic Pipe Installation

RTRP shall be installed in accordance with ASTM D 3839. RPMP shall be

installed in accordance with the manufacturer's recommendations. PE Pipe shall be installed in accordance with ASTM D 2774. PVC pipe shall be installed in accordance with AWWA M23.

3.1.4.3 Piping Connections

Where connections are made between new work and existing mains, the connections shall be made by using specials and fittings to suit the actual conditions. When made under pressure, these connections shall be installed using standard methods as approved by the Contracting Officer.

3.1.4.4 Penetrations

Pipe passing through walls of valve pits and structures shall be provided with ductile-iron or Schedule 40 steel wall sleeves. Annular space between walls and sleeves shall be filled with rich cement mortar. Annular space between pipe and sleeves shall be filled with mastic.

3.1.4.5 Flanged Pipe

Flanged pipe shall only be installed above ground or with the flanges in valve pits.

3.1.5 Jointing

3.1.5.1 Reinforced Concrete Pipe Requirements

The inside and outside annular spaces between abutting sections of concrete pipe shall be filled with rich cement mortar in accordance with the pipe manufacturer's recommendations. Excess mortar shall be removed from interior annular spaces, leaving a smooth and continuous surface between pipe sections. Exposed portions of steel joint rings shall be protected from corrosion by a metallic coating or by an approved nonmetallic coating. Rubber gaskets shall be handled, lubricated where necessary, and installed in accordance with the pipe manufacturer's recommendations.

3.1.5.2 PE Pipe Requirements

Jointing shall comply with ASTM D 2657, Technique I-Socket Fusion or Technique II-Butt Fusion, or Technique III - Hot Gas Fusion.

3.1.5.3 PVC Plastic Pipe Requirements

a. Pipe less than 100 mm (4 inch) diameter: Threaded joints shall be made by wrapping the male threads with approved thread tape or applying an approved lubricant, then threading the joining members together. The joint shall be tightened using strap wrenches to prevent damage to the pipe and/or fitting. To avoid excessive torque, joints shall be tightened no more than one thread past hand-tight. Preformed rubber-ring gaskets for elastomeric-gasket joints shall be made in accordance with ASTM F 477 and as specified. Pipe ends for push-on joints shall be beveled to facilitate assembly and marked to indicate when the pipe is fully seated. The gasket shall be prelubricated to prevent displacement. The gasket and ring groove in the bell or coupling shall match. The manufacturer of the pipe or fitting shall supply the elastomeric gasket. Couplings shall be provided with stops or centering rings to assure that the coupling is centered on the joint. Solvent cement joints shall use sockets conforming to ASTM

D 2467. The solvent cement used shall meet the requirements of ASTM D 2564; the joint assembly shall be made in accordance with ASTM D 2855 and the manufacturer's specific recommendations.

b. Pipe 100 through 300 mm diameter: Joints shall be elastomeric gasket as specified in AWWA C900. Jointing procedure shall be as specified for pipe less than 100 mm (4 inch) diameter with configuration using elastomeric ring gasket.

c. Pipe 350 through 900 mm diameter: Joints shall be elastomeric gasket push-on joints made in accordance with AWWA M23.

3.1.5.4 RTRP I, RTRP II and RPMP Pipe

a. RTRP I: Assembly of the pipe shall be done in conformance with the manufacturer's written instruction and installation procedures. Field joints shall be prepared as specified by the pipe manufacturer. Several pipe joints having interference-fit type couplings may be field bonded and cured simultaneously. However, the pipe shall not be moved and additional joints shall not be made until the previously laid joints are completely cured. Joints not having interference-fit type coupling shall be fitted with a clamp which shall hold the joint rigidly in place until the joint cement has completely cured. The clamps shall have a protective material on the inner surface to prevent damage to the plastic pipe when the clamp is tightened in place. The pipe manufacturer shall provide a device or method to determine when the joint is pulled against the pipe stop. Additionally, the pipe manufacturer shall furnish a gauge to measure the diameter of the spigot ends to ensure the diameter conforms to the tolerances specified by the manufacturer. All pipe ends shall be gauged. Factory certified tests shall have been satisfactorily performed to verify that short-term rupture strength is 10.3 MPa (1,500 psi) or greater when carried out in accordance with ASTM D 1599. At any ambient temperature, field bonded epoxy-cemented joints shall be cured with a self-regulating, thermostatically temperature controlled, electrical heating blanket for the time and temperature recommended by the manufacturer for the applicable size and type of joint, or by an alternate heating method recommended by the manufacturer and approved by the Contracting Officer. The joint sections shall not be moved during heating, or until the joint has cooled to ambient temperature.

b. RTRP II: A reinforced overlay joint shall be used to join sections together through a placement of layers of reinforcement fiberglass roving, mat, tape or fabric thoroughly saturated with compatible catalyzed resin.

c. Fittings and Specials for RTRP and RPMP Pipe: Metal to RTRP and RPMP pipe connections shall be made by bolting steel flanges to RTRP and RPMP pipe flanges. Cast-iron fitting with gasket bell or mechanical joint may be used with RTRP if pipe has cast iron outside diameter. Steel flanges shall be flat-faced type. Where raised-face steel flanges are used, spacer rings shall be used to provide a flat-face seat for RTRP and RPMP pipe flanges. A full-face Buna "N" gasket 3 mm (1/8 inch) thick with a shore hardness of 50-60 shall be used between all flanged connections. The RTRP and RPMP pipe flange shall have raised sealing rings. Flat washers shall be used under all nuts and bolts on RTRP and

RPMP pipe flanges. Bolts and nuts shall be of noncorrosive steel and torqued to not more than 135 Newton meters. Flanges shall not be buried. A concrete pit shall be provided for all flanged connections.

3.1.5.5 Ductile-Iron Pipe Requirements

Mechanical and push-on type joints shall be installed in accordance with AWWA C600 for buried lines or AWWA C606 for grooved and shouldered pipe above ground or in pits.

3.1.5.6 Isolation Joints and Dielectric Fittings

Isolation joints and dielectric fittings shall be installed in accordance with details specified in paragraph JOINTS. Dielectric unions shall be encapsulated in a field-poured coal-tar covering, with at least 3 mm thickness of coal tar over all fitting surfaces.

3.1.5.7 Transition Fittings

Connections between different types of pipe and accessories shall be made with transition fittings approved by the Contracting Officer.

3.1.6 Installation of Service Lines

Service lines shall include the pipeline connecting building piping to water distribution lines to the connections with the building service at a point approximately 1.5 m outside the building where such building service exists. Where building services are not installed, the Contractor shall terminate the service lines approximately 1.5 m from the site of the proposed building at a point designated by the Contracting Officer. Such service lines shall be closed with plugs or caps. All service stops and valves shall be provided with service boxes. Service lines shall be constructed in accordance with the following requirements:

3.1.6.1 Service Lines 50 mm (2 Inches) and Smaller

Service lines 50 mm (2 inches) and smaller shall be connected to the main by a directly-tapped corporation stop or by a service clamp. A corporation stop and a copper gooseneck shall be provided with either type of connection. Maximum sizes for directly-tapped corporation stops and for outlets with service clamps shall be as in TABLE I. Where 2 or more gooseneck connections to the main are required for an individual service, such connections shall be made with standard branch connections. The total clear area of the branches shall be at least equal to the clear area of the service which they are to supply. Connections to existing PVC pipe shall be made with a double strap service clamp of the size indicated in Table 1.

Service lines 40 mm (1-1/2 inches) and smaller shall have a service stop. Service lines 50 mm (2 inches) in size shall have a gate valve.

TABLE I. SIZE OF CORPORATION STOPS AND OUTLET

Pipe Size mm	Corporation Stops, mm For Ductile-Iron Pipe	Outlets w/Service Clamps, mm Single & Double Strap
80	--	25
100	25	25
150	32	40
200	40	50
250	40	50
300 & larger	50	50

NOTE:

a. Service lines 40 mm (1-1/2 inches) and smaller shall have a service stop.

b. Service lines 50 mm (2 inches) in size shall have a gate valve.

3.1.6.2 Service Lines Larger than 50 mm (2 Inches)

Service lines larger than 50 mm (2 inches) shall be connected to the main by a tapped saddle, tapping sleeve and valve, service clamp or reducing tee, depending on the main diameter and the service line diameter, and shall have a gate valve. Lines 80 mm (3 inches) and larger may use rubber-seated butterfly valves as specified above, or gate valves.

3.1.6.3 Service Lines for Sprinkler Supplies

Water service lines used to supply building sprinkler systems for fire protection shall be connected to the water distribution main in accordance with NFPA 24.

3.1.7 Setting of Fire Hydrants, Meters, Valves and Valve Boxes

3.1.7.1 Location of Fire Hydrants

Fire hydrants shall be located and installed as shown. Each hydrant shall be connected to the main with a 150 mm (6 inch) branch line having at least as much cover as the distribution main. Hydrants shall be set plumb with pumper nozzle facing the roadway, with the center of the lowest outlet not less than 450 mm above the finished surrounding grade, and the operating nut not more than 1.2 m above the finished surrounding grade. Except where approved otherwise, the backfill around hydrants shall be thoroughly compacted to the finished grade immediately after installation to obtain beneficial use of the hydrant as soon as practicable. The hydrant shall be set upon a slab of concrete not less than 100 mm thick and 400 mm square.

3.1.7.2 Location of Meters

Meters and meter boxes shall be installed at the locations shown on the drawings. The meters shall be centered in the boxes to allow for reading and ease of removal or maintenance.

3.1.7.3 Location of Valves

After delivery, valves, including those in hydrants shall have the interiors cleaned of all foreign matter before installation. Stuffing boxes shall be tightened and hydrants and valves shall be fully opened and fully closed to ensure that all parts are in working condition. Check, pressure reducing, vacuum, and air relief valves shall be installed in valve pits. Valves and valve boxes shall be installed where shown or specified, and shall be set plumb. Valve boxes shall be centered on the valves. Boxes shall be installed over each outside gate valve unless otherwise shown. Where feasible, valves shall be located outside the area of roads and streets. Earth fill shall be tamped around each valve box or pit to a distance of 1.2 m on all sides of the box, or the undisturbed trench face if less than 1.2 m.

3.1.7.4 Location of Service Boxes

Where water lines are located below paved streets having curbs, the boxes shall be installed directly back of the curbs. Where no curbing exists, service boxes shall be installed in accessible locations, beyond the limits of street surfacing, walks and driveways.

3.1.8 Tapped Tees and Crosses

Tapped tees and crosses for future connections shall be installed where shown.

3.1.9 Hot Tapping

Hot tapping or pressure tapping shall be as indicated on drawings. See information on attached to the end of this section.

3.1.10 Thrust Restraint

Plugs, caps, tees and bends deflecting 11.25 degrees or more, either vertically or horizontally, on waterlines 100 mm (4 inches) in diameter or larger, and fire hydrants shall be provided with thrust restraints. Valves 150 mm (6 inches) and larger shall be provided with thrust blocking to prevent movement, except thrust blocking may be omitted for buried valves on concrete pipelines, unless the valve is at or near the end of a buried concrete pipeline. Thrust restraints shall be either thrust blocks or, for ductile-iron pipes, restrained joints.

3.1.10.1 Thrust Blocks

Thrust blocking shall be concrete of a mix not leaner than: 1 cement, 2-1/2 sand, 5 gravel; and having a compressive strength of not less than 14 MPa after 28 days. Blocking shall be placed between solid ground and the hydrant or fitting to be anchored. Unless otherwise indicated or directed, the base and thrust bearing sides of thrust blocks shall be poured directly against undisturbed earth. The sides of thrust blocks not subject to thrust may be poured against forms. The area of bearing shall be as shown or as directed. Blocking shall be placed so that the fitting joints will be accessible for repair. Steel rods and clamps shall be used to anchor vertical down bends into gravity thrust blocks. Steel rods and clamps

shall be protected by galvanizing or by coating with an approved coal-tar compound, approximately 20 mils dry film thickness.

3.1.10.2 Restrained Joints

For ductile-iron pipe, restrained joints shall be designed by the Contractor or the pipe manufacturer in accordance with DIPRA-01.

3.2 HYDROSTATIC TESTS

Where any section of a water line is provided with concrete thrust blocking for fittings or hydrants, the hydrostatic tests shall not be made until at least 5 days after installation of the concrete thrust blocking, unless otherwise approved.

3.2.1 Pressure Test

After the pipe is laid, the joints completed, fire hydrants permanently installed, and the trench partially backfilled leaving the joints exposed for examination, the newly laid piping or any valved section of piping shall, unless otherwise specified, be subjected for 1 hour to a hydrostatic pressure test of 1.38 MPa. Each valve shall be opened and closed several times during the test. Exposed pipe, joints, fittings, hydrants, and valves shall be carefully examined during the partially open trench test. Joints showing visible leakage shall be replaced or remade as necessary. Cracked or defective pipe, joints, fittings, hydrants and valves discovered in consequence of this pressure test shall be removed and replaced with sound material, and the test shall be repeated until the test results are satisfactory. The requirement for the joints to remain exposed for the hydrostatic tests may be waived by the Contracting Officer when one or more of the following conditions is encountered:

a. Wet or unstable soil conditions in the trench.

b. Compliance would require maintaining barricades and walkways around and across an open trench in a heavily used area that would require continuous surveillance to assure safe conditions.

c. Maintaining the trench in an open condition would delay completion of the project.

The Contractor may request a waiver, setting forth in writing the reasons for the request and stating the alternative procedure proposed to comply with the required hydrostatic tests. Backfill placed prior to the tests shall be placed in accordance with the requirements of Section 02316 EXCAVATION, TRENCHING, AND BACKFILLING FOR UTILITIES SYSTEMS.

3.2.2 Leakage Test

Leakage test shall be conducted after the pressure tests have been satisfactorily completed. The duration of each leakage test shall be at least 2 hours, and during the test the water line shall be subjected to not less than 1.38 MPa pressure. Leakage is defined as the quantity of water to be supplied into the newly laid pipe, or any valved or approved section, necessary to maintain pressure within 34.5 kPa (5 psi) of the specified leakage test pressure after the pipe has been filled with water and the air expelled. Piping installation will not be accepted if leakage exceeds the allowable leakage which is determined by the following formula:

L = 0.0001351ND(P raised to 0.5 power)

L = Allowable leakage in gallons per hour
N = Number of joints in the length of pipeline tested
D = Nominal diameter of the pipe in inches
P = Average test pressure during the leakage test, in psi gauge

Should any test of pipe disclose leakage greater than that calculated by the above formula, the defective joints shall be located and repaired until the leakage is within the specified allowance, without additional cost to the Government.

3.2.3 Time for Making Test

Except for joint material setting or where concrete thrust blocks necessitate a 5-day delay, pipelines jointed with rubber gaskets, mechanical or push-on joints, or couplings may be subjected to hydrostatic pressure, inspected, and tested for leakage at any time after partial completion of backfill. Cement-mortar lined pipe may be filled with water as recommended by the manufacturer before being subjected to the pressure test and subsequent leakage test.

3.2.4 Concurrent Hydrostatic Tests

The Contractor may elect to conduct the hydrostatic tests using either or both of the following procedures. Regardless of the sequence of tests employed, the results of pressure tests, leakage tests, and disinfection shall be as specified. Replacement, repair or retesting required shall be accomplished by the Contractor at no additional cost to the Government.

a. Pressure test and leakage test may be conducted concurrently.

b. Hydrostatic tests and disinfection may be conducted concurrently, using the water treated for disinfection to accomplish the hydrostatic tests. If water is lost when treated for disinfection and air is admitted to the unit being tested, or if any repair procedure results in contamination of the unit, disinfection shall be reaccomplished.

3.3 DISINFECTION

3.3.1 Bacteriological Disinfection

Before acceptance of potable water operation, each unit of completed waterline shall be disinfected as prescribed by AWWA C651. Polyvinyl Chloride (PVC) pipe lines shall be chlorinated using only the above specified chlorinating material in solution. The agent shall not be introduced into the line in a dry solid state. From several points in the unit, the Contracting Officer will take samples of water in proper sterilized containers for bacterial examination. The unit will not be accepted until satisfactory bacteriological results have been obtained.

From several points in the unit, the Contractor shall take samples of water in proper sterilized containers for bacterial examination. The unit will not be accepted until satisfactory bacteriological results have been obtained. Chlorinated disinfection water shall not be discharged into any drainage system unless it meets the requirements of the Hawaii Administration Rules Chapter 11-54, Water Quality Standards. The chlorinated disinfection water may be used for watering grassy areas if the

chlorine concentration is reduced to that of drinking water.

3.3.2 Lead Residual

Following the bacteriological disinfection and testing, the system shall be flushed with a sufficient velocity of water and sufficient tests performed at each hot and cold water discharge point until no more than 15 ppb lead residuals remain in the system. All tests and samples shall be performed in accordance with state and, if applicable, Federal regulations. Samples for testing are to be collected after a 6 hour continuous period of no flushing, and will be considered first draw samples. The commercial laboratory shall be certified by the state's approving authority for examination of potable water. Lead residual test results shall be submitted to the Contracting Officer. The system will not be accepted until satisfactory bacteriological results and lead residual test results have been obtained. All flushing and testing for lead residuals, including all costs, are the responsibility of the Contractor.

3.4 CLEANUP

Upon completion of the installation of water lines, and appurtenances, all debris and surplus materials resulting from the work shall be removed.

-- End of Section --

SECTION TABLE OF CONTENTS

DIVISION 02 - SITE WORK

SECTION 02531

SANITARY SEWERS

PART 1 GENERAL

1.1 REFERENCES
1.2 GENERAL REQUIREMENTS
1.3 SUBMITTALS

PART 2 PRODUCTS

2.1 PIPE
2.1.1 Concrete Pipe
2.1.2 Plastic Pipe
2.1.2.1 ABS Pipe
2.1.2.2 PVC Pipe
2.1.2.3 High Density Polyethylene Pipe
2.1.3 Reinforced Plastic Mortar Pipe (RPMP)
2.1.4 Reinforced Thermosetting Resin Pipe (RTRP)
2.1.4.1 Filament Wound RTRP-I
2.1.4.2 Centrifugally Cast RTRP-II
2.1.5 Ductile Iron Pipe
2.1.6 Cast Iron Soil Pipe
2.1.7 Clay Pipe
2.2 REQUIREMENTS FOR FITTINGS
2.2.1 Fittings for Concrete Pipe
2.2.2 Fittings for Plastic Pipe
2.2.2.1 Fittings for ABS Pipe
2.2.2.2 Fittings for PVC Pipe
2.2.2.3 Fittings for High Density Polyethylene Pipe
2.2.3 Fittings for RPMP
2.2.4 Fittings for RTRP
2.2.5 Fittings for Ductile Iron Pipe
2.2.6 Fittings for Cast Iron Soil Pipe
2.2.7 Fittings for Clay Pipe
2.3 JOINTS
2.3.1 Concrete Pipe Jointing
2.3.2 Plastic Pipe Jointing
2.3.2.1 ABS Pipe Jointing
2.3.2.2 High Density Polyethylene Pipe Jointing
2.3.3 RPMP Jointing
2.3.4 RTRP Jointing
2.3.5 Ductile Iron Pipe Jointing
2.3.6 Cast Iron Soil Pipe Jointing
2.3.7 Clay Pipe Jointing
2.4 BRANCH CONNECTIONS
2.5 FRAMES AND COVERS
2.6 STAINLESS STEEL LADDER
2.7 CEMENT MORTAR
2.7.1 Portland Cement

2.7.2 Portland Cement Concrete
2.8 STRUCTURES
2.8.1 Precast Reinforced Concrete Manhole Sections
2.8.2 Glass-Fiber-Reinforced Polyester Manholes
2.9 MANHOLE DETAILS
2.9.1 Manhole Inserts
2.9.2 Manhole Insert Similar to "No flow Inflow Dish"

PART 3 EXECUTION

3.1 INSTALLATION
3.1.1 Adjacent Facilities
3.1.1.1 Sleeves
3.1.1.2 Roads
3.1.1.3 Structural Foundations
3.1.1.4 Abandoned Manholes and Sewer Lines
3.1.2 Pipe Laying
3.1.2.1 Caulked Joints
3.1.2.2 Trenches
3.1.2.3 Backfill
3.1.2.4 Width of Trench
3.1.2.5 Jointing
3.1.2.6 Handling and Storage
3.1.3 Leakage Tests
3.1.4 Test for Deflection
3.1.5 Sewage Spills
3.2 CONCRETE CRADLE AND ENCASEMENT
3.3 INSTALLATION OF WYE BRANCHES
3.4 MANHOLE DETAILS
3.4.1 General Requirements
3.4.2 Steel Ladder Anchorage
3.4.3 Jointing, Plastering and Sealing
3.4.4 Setting of Frames and Covers
3.4.5 External Preformed Rubber Joint Seals
3.5 CONNECTING TO EXISTING MANHOLES
3.6 BUILDING CONNECTIONS
3.7 CLEANOUTS AND OTHER APPURTENANCES

-- End of Section Table of Contents --

SECTION 02531

SANITARY SEWERS

PART 1 GENERAL

1.1 REFERENCES

The publications listed below form a part of this specification to the extent referenced. The publications are referred to in the text by basic designation only.

AMERICAN SOCIETY FOR TESTING AND MATERIALS (ASTM)

ASTM A 48	(1994a) Gray Iron Castings
ASTM A 74	(1996) Cast Iron Soil Pipe and Fittings
ASTM A 276	(1998) Specification for Stainless Steel Bars & Shapes
ASTM C 14M	(1995) Concrete Sewer, Storm Drain, and Culvert Pipe (Metric)
ASTM C 33	(1993) Concrete Aggregates
ASTM C 76M	(1996) Reinforced Concrete Culvert, Storm Drain, and Sewer Pipe (Metric)
ASTM C 94	(1996) Ready-Mixed Concrete
ASTM C 150	(1997) Portland Cement
ASTM C 260	(1995) Air-Entraining Admixtures for Concrete
ASTM C 270	(1997) Mortar for Unit Masonry
ASTM C 425	(1996) Compression Joints for Vitrified Clay Pipe and Fittings
ASTM C 443M	(1994) Joints for Circular Concrete Sewer and Culvert Pipe, Using Rubber Gaskets (Metric)
ASTM C 478	(1996) Precast Reinforced Concrete Manhole Sections
ASTM C 564	(1995a) Rubber Gaskets for Cast Iron Soil Pipe and Fittings
ASTM C 700	(1996) Vitrified Clay Pipe, Extra Strength, Standard Strength, and Perforated

ASTM C 828	(1991, R 1996) Low-Pressure Air Test of Vitrified Clay Pipe Lines
ASTM C 924	(1989) Concrete Pipe Sewer Lines by Low-Pressure Air Test Method
ASTM C 972	(1995) Compression-Recovery of Tape Sealant
ASTM D 412	(1992) Vulcanized Rubber and Thermoplastic Rubbers and Thermoplastic Elastomers - Tension
ASTM D 624	(1991; R 1996) Tear Strength of Conventional Vulcanized Rubber and Thermoplastic Elastomers
ASTM D 1248	(1989) Specification for Polyethylene Plastic Moldings and Extrusion Materials
ASTM D 1784	(1996) Rigid Poly(Vinyl Chloride) (PVC) Compounds and Chlorinated Poly(Vinyl Chloride) (CPVC) Compounds
ASTM D 2680	(1995a)Acrylonitrile-Butadiene-Styrene (ABS) and Poly(Vinyl Chloride) (PVC) Composite Sewer Piping
ASTM D 2751	(1996) Acrylonitrile-Butadiene-Styrene (ABS) Sewer Pipe and Fittings
ASTM D 2996	(1995) Filament-Wound "Fiberglass" (Glass-Fiber-Reinforced Thermosetting-Resin) Pipe
ASTM D 2997	(1995) Centrifugally Cast "Fiberglass" (Glass-Fiber-Reinforced-Thermosetting-Resin) Pipe
ASTM D 3034	(1994) Type PSM Poly(Vinyl Chloride) (PVC) Sewer Pipe and Fittings
ASTM D 3212	(1996a) Joints for Drain and Sewer Plastic Pipes Using Flexible Elastomeric Seals
ASTM D 3262	(1996) "Fiberglass" (Glass-Fiber-Reinforced Thermosetting-Resin) Sewer Pipe
ASTM D 3350	(1996) Polyethylene Plastics Pipe and Fittings Materials
ASTM D 3753	(1981; R 1991) Glass-Fiber-Reinforced Polyester Manholes
ASTM D 3840	(1988) "Fiberglass" (Glass-Fiber-Reinforced Thermosetting-Resin) Pipe Fittings for Nonpressure Applications

ASTM F 402	(1993) Safe Handling of Solvent Cements, Primers, and Cleaners Used for Joining Thermoplastic Pipe and Fittings
ASTM F 477	(1995) Elastomeric Seals (Gaskets) for Joining Plastic Pipe
ASTM F 714	(1994) Polyethylene (PE) Plastic pipe (SDR-PR) Based on Outside Diameter
ASTM F 794	(1995a) Poly(Vinyl Chloride) (PVC) Profile Gravity Sewer Pipe and Fittings Based on Controlled Inside Diameter
ASTM F 894	(1995) Polyethylene (PE) Large Diameter Profile Wall Sewer and Drain Pipe
ASTM F 949	(1994) Poly(Vinyl Chloride) (PVC) Corrugated Sewer Pipe with a Smooth Interior and Fittings

AMERICAN WATER WORKS ASSOCIATION (AWWA)

AWWA C105	(1993) Polyethylene Encasement for Ductile-Iron Pipe Systems
AWWA C110	(1993) Ductile-Iron and Gray-Iron Fittings, 3 In. Through 48 In. (75 mm through 1200 mm), for Water and Other Liquids
AWWA C111	(1995) Rubber-Gasket Joints for Ductile-Iron Pressure Pipe and Fittings
AWWA C115	(1994) Flanged Ductile-Iron Pipe with Ductile-Iron or Gray-Iron Threaded Flanges
AWWA C151	(1996) Ductile-Iron Pipe, Centrifugally Cast, for Water or Other Liquids

NATIONAL FIRE PROTECTION ASSOCIATION (NFPA)

NFPA 49	(1994) Hazardous Chemicals Data
NFPA 325-1	(1994) Fire Hazard Properties of Flammable Liquids, Gases, and Volatile Solids
NFPA 704	(1996) Identification of the Fire Hazards of Materials for Emergency Response

UNI-BELL PVC PIPE ASSOCIATION (UBPPA)

UBPPA UNI-B-6	(1990) Recommended Practice for the Low-Pressure Air Testing of Installed Sewer Pipe
UBPPA UNI-B-9	(1990; Addenda 1994) Recommended Performance Specification for Polyvinyl Chloride (PVC) Profile Wall Gravity Sewer

Pipe and Fittings Based on Controlled Inside Diameter (Nominal Pipe Sizes 4-48 inch)

1.2 GENERAL REQUIREMENTS

The construction required herein shall include appurtenant structures and building sewers to points of connection with the building drains 1.5 m outside the building to which the sewer system is to be connected. The Contractor shall replace damaged material and redo unacceptable work at no additional cost to the Government. Excavation and backfilling is specified in Section 02316 EXCAVATION, TRENCHING, AND BACKFILLING FOR UTILITIES SYSTEMS. Backfilling shall be accomplished after inspection by the Contracting Officer. Before, during, and after installation, plastic pipe and fittings shall be protected from any environment that would result in damage or deterioration to the material. The Contractor shall have a copy of the manufacturer's instructions available at the construction site at all times and shall follow these instructions unless directed otherwise by the Contracting Officer. Solvents, solvent compounds, lubricants, elastomeric gaskets, and any similar materials required to install the plastic pipe shall be stored in accordance with the manufacturer's recommendation and shall be discarded if the storage period exceeds the recommended shelf life. Solvents in use shall be discarded when the recommended pot life is exceeded.

1.3 SUBMITTALS

Government approval is required for submittals with a "GA" designation; submittals having an "FIO" designation are for information only. The following shall be submitted in accordance with Section 01330 SUBMITTAL PROCEDURES:

SD-13 Certificates

Portland Cement; FIO.

Certificates of compliance stating the type of cement used in manufacture of concrete pipe, fittings and precast manholes.

PART 2 PRODUCTS

2.1 PIPE

Pipe shall conform to the respective specifications and other requirements specified below.

2.1.1 Concrete Pipe

Concrete pipe 600 mm (24 inches) or less in diameter, unless otherwise shown or specified, shall be nonreinforced and conform to ASTM C 14M , Class 1.

2.1.2 Plastic Pipe

Acrylonitrile-butadiene-styrene (ABS) and polyvinyl chloride (PVC) composite sewer piping shall conform to ASTM D 2680. Size 200 mm (8 inch) through 380 mm (15 inch) diameter.

2.1.2.1 ABS Pipe

ASTM D 2751.

2.1.2.2 PVC Pipe

ASTM D 3034, Type PSM with a maximum SDR of 35, Size 380 mm (15 inch) or less in diameter. ASTM F 949 for corrugated sewer pipes with a smooth interior. UBPPA UNI-B-9 and ASTM F 794, Series 46, for ribbed sewer pipe with smooth interior, size 200 mm (8 inch) through 1200 mm (48 inch) diameters. PVC shall be certified by the compounder as meeting the requirements of ASTM D 1784, cell Class 12454B. The pipe stiffness shall be greater than or equal to 735/D for cohesionless material pipe trench backfills.

2.1.2.3 High Density Polyethylene Pipe

ASTM F 714, size 100 mm (4 inch)) through 1200 mm (48 inch). The polyethylene shall be certified by the resin producer as meeting the requirements of ASTM D 3350, cell Class 334433C. The pipe stiffness shall be greater than or equal to 1170/D for cohesionless material pipe trench backfills.

2.1.3 Reinforced Plastic Mortar Pipe (RPMP)

ASTM D 3262.

2.1.4 Reinforced Thermosetting Resin Pipe (RTRP)

ASTM D 3262.

2.1.4.1 Filament Wound RTRP-I

RTRP-I shall conform to ASTM D 2996, except pipe shall have an outside diameter equal to cast iron outside diameter or standard weight steel pipe. The pipe shall be suitable for a normal working pressure of 1.03 MPa (150 psi) at 22.8 degrees C (73 degrees F). The inner surface of the pipe shall have a smooth uniform continuous resin-rich surface liner conforming to ASTM D 2996.

2.1.4.2 Centrifugally Cast RTRP-II

RTRP-II shall conform to ASTM D 2997. Pipe shall have an outside diameter equal to standard weight steel pipe.

2.1.5 Ductile Iron Pipe

Pipe shall conform to AWWA C151 unless otherwise shown or specified.

2.1.6 Cast Iron Soil Pipe

Cast iron soil pipe shall conform to ASTM A 74, Class SV. When installed underground, pipe shall be encased with 8 mm thick polyethylene in accordance with AWWA C105.

2.1.7 Clay Pipe

ASTM C 700 Extra strength bell-and-spigot type.

2.2 REQUIREMENTS FOR FITTINGS

Fittings shall be compatible with the pipe supplied and shall have a strength not less than that of the pipe. Fittings shall conform to the respective specifications and other requirements specified below.

2.2.1 Fittings for Concrete Pipe

ASTM C 14M for pipe 600 mm (24 inches) or less in diameter.

2.2.2 Fittings for Plastic Pipe

ABS and PVC composite sewer pipe fittings shall conform to ASTM D 2680.

2.2.2.1 Fittings for ABS Pipe

ASTM D 2751.

2.2.2.2 Fittings for PVC Pipe

ASTM D 3034 for type PSM pipe. ASTM F 949 for corrugated sewer pipe with a smooth interior. UBPPA UNI-B-9 and ASTM F 794, Series 46, for ribbed sewer pipe with smooth interior.

2.2.2.3 Fittings for High Density Polyethylene Pipe

ASTM F 894.

2.2.3 Fittings for RPMP

ASTM D 3840.

2.2.4 Fittings for RTRP

ASTM D 3262.

2.2.5 Fittings for Ductile Iron Pipe

Mechanical fittings shall conform to AWWA C110, rated for 1.03 MPa (150 psi). Push-on fittings shall conform to AWWA C110 and AWWA C111, rated for 10.3 MPa (150 psi).

2.2.6 Fittings for Cast Iron Soil Pipe

ASTM A 74.

2.2.7 Fittings for Clay Pipe

ASTM C 700 Extra strength.

2.3 JOINTS

Joints installation shall comply with the manufacturer's instructions. "Biobarrier" or other approved equal root barrier shall be wrapped around all joints of sewer pipes and appurtenances located within the spread (branches and leaves) of existing trees and within 6 m (20 ft) of the center of newly panted trees. The root deterrent material shall extend a minimum of .23 m (9 inch) on either side of the joint. Overlap of material shall be 100 mm (4 inch) minimum. Method of fastening material to the pipe shall be with plastic ties or as recommended by the manufacturer and

subject to the approval of the Contracting Officer.

2.3.1 Concrete Pipe Jointing

Joints and gaskets shall conform to ASTM C 443M .

2.3.2 Plastic Pipe Jointing

Flexible plastic pipe (PVC or high density polyethylene pipe) gasketed joints shall conform to ASTM D 3212.

2.3.2.1 ABS Pipe Jointing

ASTM D 2751, solvent weld or bell and spigot O-ring joint, size 300 mm (12 inches) or less in diameter, dimensions and tolerances in accordance with Table 2 of ASTM D 2751.

2.3.2.2 High Density Polyethylene Pipe Jointing

Rubber gasket joints shall conform to ASTM C 443M .

2.3.3 RPMP Jointing

Joints shall be bell and spigot type utilizing an elastomeric gasket in accordance with ASTM F 477.

2.3.4 RTRP Jointing

Joints shall be bell and spigot type utilizing an elastomeric gasket in accordance with ASTM F 477.

2.3.5 Ductile Iron Pipe Jointing

Push-on joints shall conform to AWWA C111. Mechanical joints shall conform to AWWA C111 as modified by AWWA C151. Flanged joints shall conform to AWWA C115.

2.3.6 Cast Iron Soil Pipe Jointing

Rubber gaskets for compression joints shall conform to ASTM C 564. Packing material for caulked joints shall be twisted jute or oakum, tarred type, or asphalt-saturated cellulose-fiber. Joints for acid resisting cast iron soil pipe shall be made with acid resistant non-asbestos packing. The packing shall not contain material which would affect adhesion of the joint sealing material to the pipe. Lead shall be suitable for caulking of joints.

2.3.7 Clay Pipe Jointing

Compression joints shall conform to ASTM C 425.

2.4 BRANCH CONNECTIONS

Branch connections shall be made by use of regular fittings or solvent cemented saddles as approved. Saddles for ABS and PVC composite pipe shall conform to Figure 2 of ASTM D 2680; saddles for ABS pipe shall comply with Table 3 of ASTM D 2751; and saddles for PVC pipe shall conform to Table 4 of ASTM D 3034.

2.5 FRAMES AND COVERS

Frames and covers shall be cast iron or ductile iron. Cast iron frames and covers shall be new, conforming to the requirements for Gray Iron Castings, ASTM A 48, Class No. 30B minimum, and shall be cast true to pattern with dimensions as indicated. The frames and covers shall have a combined weight of not less than 400 pounds (approx weight for heavy duty 822 mm (32") covers & frames is 560 pounds). The word "Sewer" shall be cast into covers so that it is plainly visible. The foundry’s identifying mark, country of origin & date shall be cast into each frame & cover.

Castings shall be sound and free from patches, warps, cracks, welds, blowholes, and other defects & imperfections. The bearing faces of frames & covers shall be machined and fitted together to prevent rocking of the cover when rotated to any position in the frame. Notwithstanding the fit, dimension and weight requirements specified herein or on the drawings, all frames and covers of the same type shall assemble interchangeably.

All castings shall be thoroughly cleaned before leaving the shop and shall be shipped UNPAINTED. Castings shall be field cleaned and coated with an approved coal tar compound. Coating thickness shall be approximately 20 mils dry film thickness.

2.6 STAINLESS STEEL LADDER

A steel ladder shall be provided where the depth of a manhole exceeds 1 m (3 feet). The ladder shall not be less than 406 mm (16 inches) in width, with 19 mm (3/4 inch) diameter rungs spaced 305 mm (12 inches) apart. The two stringers shall be a minimum 10 mm (3/8 inch) thick and 51 mm (2 inch) wide. Ladders and inserts shall be fabricated of type 304 stanless steel in conformance with ASTM A 276. Ladders and inserts shall be fabricated of type 316 stainless steel in conformance with ASTM A 276.

2.7 CEMENT MORTAR

Cement mortar shall conform to ASTM C 270, Type M with Type II cement.

2.7.1 Portland Cement

Portland cement shall conform to ASTM C 150, Type V for concrete used in concrete pipe, concrete pipe fittings, and manholes and type optional with the Contractor for cement used in concrete cradle, concrete encasement, and thrust blocking. Air-entraining admixture conforming to ASTM C 260 shall be used with Type V cement. Where aggregates are alkali reactive, as determined by Appendix XI of ASTM C 33, a cement containing less than 0.60 percent alkalies shall be used.

2.7.2 Portland Cement Concrete

Portland cement concrete shall conform to ASTM C 94, compressive strength of 28 MPa at 28 days, except for concrete cradle and encasement or concrete blocks for manholes. Concrete used for cradle and encasement shall have a compressive strength of 17 MPa minimum at 28 days. Concrete in place shall be protected from moisture loss for 7 days.

2.8 STRUCTURES

2.8.1 Precast Reinforced Concrete Manhole Sections

Precast reinforced concrete manhole sections shall conform to ASTM C 478, except that portland cement shall be as specified herein. Joints shall be cement mortar, an approved mastic, rubber gaskets, a combination of these types; or the use of external preformed rubber joint seals and extruded rolls of rubber with mastic adhesive on one side.

2.8.2 Glass-Fiber-Reinforced Polyester Manholes

Glass-fiber-reinforced polyester manholes shall conform to ASTM D 3753.

2.9 MANHOLE DETAILS

2.9.1 Manhole Inserts

Manholes in paved areas and unpaved areas subject to ponding shall have a manhole insert fully seated around the manhole frame rim to prevent water from infiltrating between the cover and the manhole frame rim. (Manhole frame shall be cleaned of all dirt and debris prior to placing the manhole insert on the rim.)

2.9.2 Manhole Insert Similar to "No flow Inflow Dish"

Manhole Inserts, similar to "No Flow Inflow Dish" or approved equal, shall be made of high density polyethylene copolymer material that meets ASTM specification designation ASTM D 1248, Class A Category 5, Type 111. The insert shall have a minimum impact brittleness temperature of 82 deg C (180 deg F). The thickness of the insert shall be 3 mm or greater. The insert shall be manufacturered to the dimensions as shown on the contract drawings to allow easy installation within the manhole frame. All lift strap shall be attached to the rinsing edge of the bowl of the insert. The lift shall be made of 25 mm (1 inch) width woven polypropylene web and shall be seared on all cut ends to prevent unraveling. The lift strap shall be attached to the insert by means of a stainless steel rivet. Location of the lift strap shall be such as to provide easy visual location. Ventilation of the insert shall be via a vent hole located on the side wall of the dish 19 mm below the lip. The hole thus placed allows a maximum release of 38 liters per 24 hours and is not affected by debris that might collect at the bottom of the dish.

PART 3 EXECUTION

3.1 INSTALLATION

3.1.1 Adjacent Facilities

3.1.1.1 Sleeves

Sewer pipe shall be encased in a sleeve of rigid conduit if required in paragraph Structural Foundation. When sleeves are required, the pipe sleeve shall be reinforced concrete pipe for storm drains in accordance with ASTM C 76M, Class V as specified in Section 02630 STORM-DRAINAGE SYSTEM. A minimum clearance of at least 100 (4 inch) between the inner wall of the sleeve and the maximum outside diameter of the sleeved pipe and joints shall be provided. Sand bedding or suitable pipe support shall be provided for the sewer pipe through the sleeve.

3.1.1.2 Roads

Sewer pipe shall be encased in a sleeve of rigid conduit for the lengths shown. Where sleeves are required, the pipe sleeve shall be as specified for storm drains in Section 02630 STORM-DRAINAGE SYSTEM. A minimum clearance of at least 50 mm between the inner wall of the sleeve and the maximum outside diameter of the sleeved pipe and joints shall be provided. Sand bedding shall be provided for the water pipe through the sleeve. Sleeves of ferrous material shall be provided with the corrosion protection as required for the conditions encountered at the site of installation.

3.1.1.3 Structural Foundations

Where sewer pipe is to be installed within 1 m of an existing or proposed building or structural foundation such as a retaining wall, control tower footing, water tank footing, of building footing, or any similar structure, the sewer pipe shall be sleeved as specified above. Contractor shall ensure there is no damage to these structures, and no settlement or movement of foundations or footing.

3.1.1.4 Abandoned Manholes and Sewer Lines

Abandoned sewer lines should be plugged with concrete at each end. The concrete plug should extend from the manhole a minimum 610 mm (2 feet) into the abandoned line.

Abandoned sewer manholes should have the manhole bottoms cracked to permit subsurface water drainage through the bottom. The manhole should be backfilled with (a) compacted granular material such base course or S4C or (b) lean concrete. The manhole cover should be completely removed along with the manhole cone or the upper 1 m (3 feet) for cast-in-place manholes.

3.1.2 Pipe Laying

a. Pipe shall be protected during handling against impact shocks and free fall; the pipe interior shall be free of extraneous material.

b. Pipe laying shall proceed upgrade with the spigot ends of bell-and-spigot pipe and tongue ends of tongue-and-groove pipe pointing in the direction of the flow. Each pipe shall be laid accurately to the line and grade shown on the drawings. Pipe shall be laid and centered so that the sewer has a uniform invert. As the work progresses, the interior of the sewer shall be cleared of all superfluous materials.

c. Before making pipe joints, all surfaces of the portions of the pipe to be joined shall be clean and dry. Lubricants, primers, and adhesives shall be used as recommended by the pipe manufacturer. The joints shall then be placed, fitted, joined, and adjusted to obtain the degree of water tightness required.

d. ABS composite pipe ends with exposed truss and filler material shall be coated with solvent weld material before making the joint to prevent water or air passage at the joint between the inner and outer wall of the pipe.

e. Installations of solvent weld joint pipe, using ABS or PVC pipe and fittings shall be in accordance with ASTM F 402. The Contractor shall ensure adequate trench ventilation and protection

for workers installing the pipe.

3.1.2.1 Caulked Joints

The packing material shall be well packed into the annular space to prevent the entrance of lead into the pipe. The remainder of the space shall be filled with molten lead that is hot enough to show a rapid change in color when stirred. Scum shall be removed before pouring. The lead shall be caulked to form a tight joint without overstraining the bell and shall have a minimum depth of 25 mm after caulking.

3.1.2.2 Trenches

Trenches shall be kept free of water and as dry as possible during bedding, laying, and jointing and for as long a period as required. When work is not in progress, open ends of pipe and fittings shall be satisfactorily closed so that no trench water or other material will enter the pipe or fittings.

3.1.2.3 Backfill

As soon as possible after the joint is made, sufficient backfill material shall be placed along the pipe to prevent pipe movement off line or grade. Plastic pipe shall be completely covered to prevent damage from ultraviolet light.

3.1.2.4 Width of Trench

If the maximum width of the trench at the top of the pipe, as specified in Section 02316 EXCAVATION, TRENCHING, AND BACKFILLING FOR UTILITIES SYSTEMS, is exceeded for any reason other than by direction, the Contractor shall install, at no additional cost to the Government, concrete cradling, pipe encasement, or other bedding required to support the added load of the backfill.

3.1.2.5 Jointing

Joints between different pipe materials shall be made as specified, using approved jointing materials.

3.1.2.6 Handling and Storage

Pipe, fittings and joint material shall be handled and stored in accordance with the manufacturer's recommendations. Storage facilities for plastic pipe, fittings, joint materials and solvents shall be classified and marked in accordance with NFPA 704, with classification as indicated in NFPA 49 and NFPA 325-1.

3.1.3 Leakage Tests

Lines shall be tested for leakage by low pressure air testing, infiltration tests or exfiltration tests, as appropriate. Low pressure air testing for vitrified clay pipes shall be as prescribed in ASTM C 828. Low pressure air testing for concrete pipes shall be as prescribed in ASTM C 828. Low pressure air testing for PVC pipe shall be as prescribed in UBPPA UNI-B-6. Low pressure air testing procedures for other pipe materials shall use the pressures and testing times prescribed in ASTM C 828 and ASTM C 924, after consultation with the pipe manufacturer. Prior to infiltration or exfiltration tests, the trench shall be backfilled up to at least the lower

half of the pipe. If required, sufficient additional backfill shall be placed to prevent pipe movement during testing, leaving the joints uncovered to permit inspection. Visible leaks encountered shall be corrected regardless of leakage test results. When the water table is 600 mm or more above the top of the pipe at the upper end of the pipeline section to be tested, infiltration shall be measured using a suitable weir or other device acceptable to the Contracting Officer. When the Contracting Officer determines that infiltration cannot be properly tested, an exfiltration test shall be made by filling the line to be tested with water so that a head of at least 600 mm is provided above both the water table and the top of the pipe at the upper end of the pipeline to be tested. The filled line shall be allowed to stand until the pipe has reached its maximum absorption, but not less than 4 hours. After absorption, the head shall be re-established. The amount of water required to maintain this water level during a 2-hour test period shall be measured. Leakage as measured by either the infiltration test or exfiltration test shall not exceed 50 mL per 5 mm diameter per 100 m of pipeline per hour. When leakage exceeds the maximum amount specified, satisfactory correction shall be made and retesting accomplished. Testing, correction, and retesting shall be made at no additional cost to the Government.

3.1.4 Test for Deflection

When flexible pipe is used, a deflection test shall be made on the entire length of the installed pipeline not less than 30 days after the completion of all work including the leakage test, backfill, and placement of any fill, grading, paving, concrete, or superimposed loads. Deflection shall be determined by use of a deflection device or by use of a spherical, spheroidal, or elliptical ball, a cylinder, or circular sections fused to a common shaft. The ball, cylinder, or circular sections shall have a diameter, or minor diameter as applicable, of 92.5 percent of the inside diameter of the pipe, but 95 percent for RPMP and RTRP. A tolerance of plus 0.5 percent will be permitted. The ball, cylinder, or circular sections shall be of a homogeneous material throughout, shall have a density greater than 1.0 as related to water at 4.0 degrees C (39.2 degrees F), and shall have a surface brinell hardness of not less than 150. The device shall be center bored and through bolted with a 6 mm (1/4 inch) minimum diameter steel shaft having a yield strength of 480 MPa (70,000 psi) or more, with eyes at each end for attaching pulling cables. The eye shall be suitably backed with flange or heavy washer; a pull exerted on the opposite end of the shaft shall produce compression throughout the remote end of the ball, cylinder or circular section. Circular sections shall be spaced so that the distance from the external faces of the front and back sections shall equal or exceed the diameter of the circular section. Failure of the ball, cylinder, or circular section to pass freely through a pipe run, either by being pulled through or by being flushed through with water, shall be cause for rejection of that run. When a deflection device is used for the test in lieu of the ball, cylinder, or circular sections described, such device shall be approved prior to use. The device shall be sensitive to 1.0 percent of the diameter of the pipe being measured and shall be accurate to 1.0 percent of the indicated dimension. Installed pipe showing deflections greater than 7.5 percent of the normal diameter of the pipe, or 5 percent for RTRP and RPMP, shall be retested by a run from the opposite direction. If the retest also fails, the suspect pipe shall be replaced at no cost to the Government.

3.1.5 Sewage Spills

Any sewage spill occurring as a result of Contractor's operations shall be

stopped immediately. DPW Environmental Division shall be notified immediately (656-2878x1049). Contaminated areas shall be cleaned and disinfected. Contractor shall accomplish any required shoreline monitoring of waters as required by the State Department of Health and/or Environmental Protection Agency. The Contractor shall develop an after-action plan addressing problems and corrective actions that will be implemented to prevent spills from occurring again.

3.2 CONCRETE CRADLE AND ENCASEMENT

The pipe shall be supported on a concrete cradle, or encased in concrete where indicated or directed.

3.3 INSTALLATION OF WYE BRANCHES

Wye branches shall be installed where sewer connections are indicated or where directed. Cutting into piping for connections shall not be done except in special approved cases. When the connecting pipe cannot be adequately supported on undisturbed earth or tamped backfill, the pipe shall be encased in concrete backfill or supported on a concrete cradle as directed. Concrete required because of conditions resulting from faulty construction methods or negligence by the Contractor shall be installed at no additional cost to the Government. The installation of wye branches in an existing sewer shall be made by a method which does not damage the integrity of the existing sewer. One acceptable method consists of removing one pipe section, breaking off the upper half of the bell of the next lower section and half of the running bell of wye section. After placing the new section, it shall be rotated so that the broken half of the bell will be at the bottom. The two joints shall then be made with joint packing and cement mortar.

3.4 MANHOLE DETAILS

3.4.1 General Requirements

Manholes shall be constructed of glass-fiber-reinforced polyester, prefabricated plastic, concrete, or precast concrete manhole sections. The invert channels shall be smooth and semicircular in shape conforming to the inside of the adjacent sewer section. Changes in direction of flow shall be made with a smooth curve of as large a radius as the size of the manhole will permit. Changes in size and grade of the channels shall be made gradually and evenly. The invert channels shall be formed directly in the concrete of the manhole base, or shall be built up with brick and mortar, or shall be half tile laid in concrete, or shall be constructed by laying full section sewer pipe through the manhole and breaking out the top half after the surrounding concrete has hardened. Pipe connections shall be made to manhole using water stops, standard O-ring joints, special manhole coupling, or shall be made in accordance with the manufacturer's recommendation. The Contractor's proposed method of connection, list of materials selected, and specials required, shall be approved prior to installation. The floor of the manhole outside the channels shall be smooth and shall slope toward the channels not less than 100 mm per meter nor more than 200 mm per meter. Free drop inside the manholes shall not exceed 500 mm, measured from the invert of the inlet pipe to the top of the floor of the manhole outside the channels; drop manholes shall be constructed whenever the free drop would otherwise be greater than 500 mm.

3.4.2 Steel Ladder Anchorage

Ladder shall be adequately anchored to the wall by means of steel inserts spaced not more than 1850 mm apart vertically, and shall be installed to provide at least 150 mm of space between the wall and the rungs. The wall along the line of the ladder shall be vertical for its entire length.

3.4.3 Jointing, Plastering and Sealing

Mortar joints shall be completely filled and shall be smooth and free from surplus mortar on the inside of the manhole. Mortar and mastic joints between precast rings shall be full-bedded in jointing compound and shall be smoothed to a uniform surface on both the interior and exterior of the manhole. Installation of rubber gasket joints between precast rings shall be in accordance with the recommendations of the manufacturer. Precast rings may also be sealed by the use of extruded rolls of rubber with mastic adhesive on one side.

3.4.4 Setting of Frames and Covers

Unless otherwise indicated, tops of frames and covers shall be set flush with finished grade in paved areas or 50 mm higher than finished grade in unpaved areas. Frame and cover assemblies shall be sealed to manhole sections using external preformed rubber joint seals that meet the requirements of ASTM D 412 and ASTM D 624, or other methods specified in paragraph Jointing, Plastering and Sealing, unless otherwise specified.

3.4.5 External Preformed Rubber Joint Seals

External preformed rubber joint seals and extruded rolls of rubber with mastic adhesive shall meet the requirements of ASTM D 412 and ASTM C 972 to ensure conformance with paragraph Leakage Tests. The seal shall be multi-section with neoprene rubber top section and all lower sections made of Ethylene Propylene Di Monomer (EPDM) rubber with a minimum thickness of 1.5 mm. Each unit shall consist of a top and a bottom section and shall have mastic on the bottom of the bottom section and mastic on the top and bottom of the top section. The mastic shall be non-hardening butyl rubber sealant and shall seal to the cone/top slab of the manhole/catch basin and over the lip of the casting. One unit shall seal a casting and up to six, 50 mm adjusting rings. The bottom section shall be 305 mm in height. A 152 mm high top section will cover up to two, 50 mm adjusting rings. A 305 mm high bottom section will cover up to six, 50 mm adjusting rings. Extension sections shall cover up to two more adjusting rings. Each extension shall overlap the bottom section by 50 mm and shall be overlapped by the top section by 50 mm.

3.5 CONNECTING TO EXISTING MANHOLES

Pipe connections to existing manholes shall be made so that finish work will conform as nearly as practicable to the applicable requirements specified for new manholes, including all necessary concrete work, cutting, and shaping. The connection shall be centered on the manhole. Holes for the new pipe shall be of sufficient diameter to allow packing cement mortar around the entire periphery of the pipe but no larger than 1.5 times the diameter of the pipe. Cutting the manhole shall be done in a manner that will cause the least damage to the walls.

3.6 BUILDING CONNECTIONS

Building connections shall include the lines to and connection with the building waste drainage piping at a point approximately 1.5 m outside the

building, unless otherwise indicated. Where building drain piping is not installed, the Contractor shall terminate the building connections approximately 1.5 m from the site of the building at a point and in a manner designated.

3.7 CLEANOUTS AND OTHER APPURTENANCES

Cleanouts and other appurtenances shall be installed where shown on the drawings or as directed by the Contracting Officer, and shall conform to the detail of the drawings.

-- End of Section --

SECTION TABLE OF CONTENTS

DIVISION 02 - SITE WORK

SECTION 02630

STORM-DRAINAGE SYSTEM

PART 1 GENERAL

1.1 REFERENCES
1.2 SUBMITTALS
1.3 DELIVERY, STORAGE, AND HANDLING
1.3.1 Delivery and Storage
1.3.2 Handling

PART 2 PRODUCTS

2.1 PIPE FOR CULVERTS AND STORM DRAINS
2.1.1 Pipes for Microtunneling
2.1.1.1 CCFRPM
2.1.1.2 Manufacture and Construction
2.1.1.3 Dimensions
2.1.2 Concrete Pipe
2.1.3 Clay Pipe
2.1.4 PVC Pipe
2.1.4.1 Type PSM PVC Pipe
2.1.4.2 Smooth Wall PVC Pipe
2.1.5 PE Pipe
2.1.5.1 Smooth Wall PE Pipe
2.1.5.2 Corrugated PE Pipe
2.1.5.3 Corrugated PE Pipe
2.1.5.4 Profile Wall PE Pipe
2.1.6 Cast Iron Soil Pipe
2.1.7 Pipes for Hydraulically Guided Auger Boring (HGAB)
2.2 DRAINAGE STRUCTURES
2.2.1 Precast Reinforced Concrete Box
2.3 MISCELLANEOUS MATERIALS
2.3.1 Concrete
2.3.2 Mortar
2.3.3 Precast Concrete Segmental Blocks
2.3.4 Brick
2.3.5 Precast Reinforced Concrete Manholes
2.3.6 Frame and Cover for Gratings
2.3.7 Joints
2.3.7.1 Flexible Joints
2.3.7.2 PVC Plastic Pipes
2.3.7.3 Smooth Wall PE Plastic Pipe
2.3.7.4 Corrugated PE Plastic Pipe
2.3.7.5 Profile Wall PE Plastic Pipe
2.4 STEEL LADDER
2.5 DOWNSPOUT BOOTS

PART 3 EXECUTION

3.1 EXCAVATION FOR PIPE CULVERTS, STORM DRAINS, AND DRAINAGE STRUCTURES
3.1.1 Trenching
3.1.2 Removal of Rock
3.1.3 Removal of Unstable Material
3.2 BEDDING
3.2.1 Concrete Pipe Requirements
3.2.2 Clay Pipe Requirements
3.2.3 Ductile Iron Pipe
3.2.4 Plastic Pipe
3.3 PLACING PIPE
3.3.1 Concrete, Clay, PVC and Ductile Iron Pipe
3.3.2 Centrifugally Cast Fiberglass Reinforced Polymer Mortar Pipe (CCFRP)
3.3.3 Corrugated PE Pipe
3.3.4 Multiple Culverts
3.3.5 Jacking Pipe Through Fills
3.3.6 Microtunneling
3.4 JOINTING
3.4.1 Concrete and Clay Pipe
3.4.1.1 Cement-Mortar Bell-and-Spigot Joint
3.4.1.2 Cement-Mortar Oakum Joint for Bell-and-Spigot Pipe
3.4.1.3 Cement-Mortar Diaper Joint for Bell-and-Spigot Pipe
3.4.1.4 Cement-Mortar Tongue-and-Groove Joint
3.4.1.5 Cement-Mortar Diaper Joint for Tongue-and-Groove Pipe
3.4.1.6 Plastic Sealing Compound Joints for Tongue-and-Grooved Pipe
3.4.1.7 Flexible Watertight Joints
3.5 DRAINAGE STRUCTURES
3.5.1 Manholes and Inlets
3.5.2 Walls and Headwalls
3.6 STEEL LADDER INSTALLATION
3.7 BACKFILLING
3.7.1 Backfilling Pipe in Trenches
3.7.2 Backfilling Pipe in Fill Sections
3.7.3 Movement of Construction Machinery
3.7.4 Compaction
3.7.4.1 General Requirements
3.7.4.2 Minimum Density
3.7.5 Determination of Density
3.8 PIPELINE TESTING
3.8.1 CCFRPM

-- End of Section Table of Contents --

SECTION 02630

STORM-DRAINAGE SYSTEM

PART 1 GENERAL

1.1 REFERENCES

The publications listed below form a part of this specification to the extent referenced. The publications are referred to in the text by basic designation only.

AMERICAN ASSOCIATION OF STATE HIGHWAY AND TRANSPORTATION OFFICIALS (AASHTO)

AASHTO M 198	(1994) Joints for Circular Concrete Sewer and Culvert Pipe Using Flexible Watertight Gaskets
AASHTO M 252	(1996) Corrugated Polyethylene Drainage Pipe Nineteenth Edition
AASHTO M 294	(1994) Corrugated Polyethylene Pipe, 305- to 915- mm (12-to 36 in.) Diameter
AASHTO MP7	Corrugated Polyethylene Pipe 1350 and 1500 mm Diameter

AMERICAN RAILWAY ENGINEERING ASSOCIATION (AREA)

AREA-01	(1997) 1997-1998 Manual for Railway Engineering 4 Vol., Volume 1

AMERICAN SOCIETY FOR TESTING AND MATERIALS (ASTM)

ASTM A 48	(1994a) Gray Iron Castings
ASTM A 74	(1998) Cast Iron Soil Pipe and Fittings
ASTM A 276	(1998b) Stainless Steel Bars and Shapes
ASTM A 536	(1984; R 1993) Ductile Iron Castings
ASTM C 12	(1995) Installing Vitrified Clay Pipe Lines
ASTM C 32	(1993) Sewer and Manhole Brick (Made from Clay or Shale)
ASTM C 55	(1997) Concrete Building Brick
ASTM C 62	(1997) Building Brick (Solid Masonry Units Made from Clay or Shale)

ASTM C 76M	(1997) Reinforced Concrete Culvert, Storm Drain, and Sewer Pipe (Metric)
ASTM C 139	(1997) Concrete Masonry Units for Construction of Catch Basins and Manholes
ASTM C 231	(1997) Air Content of Freshly Mixed Concrete by the Pressure Method
ASTM C 270	(1997a) Mortar for Unit Masonry
ASTM C 425	(1997) Compression Joints for Vitrified Clay Pipe and Fittings
ASTM C 443	(1994) Joints for Circular Concrete Sewer and Culvert Pipe, Using Rubber Gaskets
ASTM C 478M	(1997) Precast Reinforced Concrete Manhole Sections (Metric)
ASTM C 700	(1997) Vitrified Clay Pipe, Extra Strength, Standard Strength, and Perforated
ASTM C 789	(1995a) Precast Reinforced Concrete Box Sections for Culverts, Storm Drains, and Sewers
ASTM C 850	(1995a) Precast Reinforced Concrete Box Sections for Culverts, Storm Drains, and Sewers with Less Than 2 ft of Cover Subjected to Highway Loadings
ASTM D 1248	(1989) Specification for Polyethylene Plastic Molding and Extrusion Materials
ASTM D 1556	(1990; R1996) Test Method for Density and Unit Weight of Soil in Place by The Sand-Cone Method
ASTM D 1557	(1991) Laboratory Compaction Characteristics of Soil Using Modified Effort (56,000 ft-lbf/cu. ft. (2,700 kN-m/cu.m.))
ASTM D 1751	(1983; R 1991) Preformed Expansion Joint Filler for Concrete Paving and Structural Construction (Nonextruding and Resilient Bituminous Types)
ASTM D 1752	(1984; R 1996) Preformed Sponge Rubber and Cork Expansion Joint Fillers for Concrete Paving and Structural Construction
ASTM D 1784	(1997) Rigid Poly(Vinyl Chloride) (PVC) Compounds and Chlorinated Poly(Vinyl Chloride) (CPVC) Compounds
ASTM D 2321	(1989; R 1995) Underground Installation of

	Thermoplastic Pipe for Sewers and Other Gravity-Flow Applications
ASTM D 2412	Standard Test Method for Determination of External Loading Characteristics of Plastic Pipe by Parallel-Pipe Loading
ASTM D 2922	(1996) Density of Soil and Soil-Aggregate in Place by Nuclear Methods (Shallow Depth)
ASTM D 3017	(1988; R 1993) Water Content of Soil and Rock in Place by Nuclear Methods (Shallow Depth)
ASTM D 3034	(1994) Type PSM Poly(Vinyl Chloride) (PVC) Sewer Pipe and Fittings
ASTM D 3262	Standard Specification for "Fiberglass" (Glass-Fiber-Reinforced Thermosetting-Resin) Sewer Pipe.
ASTM D 3350	(1996) Polyethylene Plastics Pipe and Fittings Materials
ASTM D 4161	Standard Specification for "Fiberglass" (Glass-Fiber-Reinforced Thermosetting-Resin) Pipe Joints Using Flesible Elastomeric Seals
ASTM F 477	(1995) Elastomeric Seals (Gaskets) for Joining Plastic Pipe
ASTM F 679	(1995) Poly(Vinyl Chloride) (PVC) Large-Diameter Plastic Gravity Sewer Pipe and Fittings
ASTM F 714	(1994) Polyethylene (PE) Plastic Pipe (SDR-PR) Based on Outside Diameter
ASTM F 894	(1995) Polyethylene (PE) Large Diameter Profile Wall Sewer and Drain Pipe

1.2 SUBMITTALS

Government approval is required for submittals with a "GA" designation; submittals having an "FIO" designation are for information only. The following shall be submitted in accordance with Section 01330 SUBMITTAL PROCEDURES:

SD-06 Instructions

Placing Pipe; GA.

Printed copies of the manufacturer's recommendations for installation procedures of the material being placed, prior to installation.

Results of deflection tests shall be submitted to Contracting Officer.

SD-13 Certificates

Resin Certification; FIO. Pipeline Testing; FIO. Determination of Density ; FIO. Frame and Cover for Gratings; FIO.

Certified copies of test reports demonstrating conformance to applicable pipe specifications, before pipe is installed. Certification on the ability of frame and cover or gratings to carry the imposed live load.

SD-14 Samples

Pipe for Culverts and Storm Drains; FIO.

1.3 DELIVERY, STORAGE, AND HANDLING

1.3.1 Delivery and Storage

Materials delivered to site shall be inspected for damage, unloaded, and stored with a minimum of handling. Materials shall not be stored directly on the ground. The inside of pipes and fittings shall be kept free of dirt and debris. Before, during, and after installation, plastic pipe and fittings shall be protected from any environment that would result in damage or deterioration to the material. The Contractor shall have a copy of the manufacturer's instructions available at the construction site at all times and shall follow these instructions unless directed otherwise by the Contracting Officer. Solvents, solvent compounds, lubricants, elastomeric gaskets, and any similar materials required to install plastic pipe shall be stored in accordance with the manufacturer's recommendations and shall be discarded if the storage period exceeds the recommended shelf life. Solvents in use shall be discarded when the recommended pot life is exceeded.

1.3.2 Handling

Materials shall be handled in a manner that ensures delivery to the trench in sound, undamaged condition. Pipe shall be carried to the trench, not dragged.

PART 2 PRODUCTS

2.1 PIPE FOR CULVERTS AND STORM DRAINS

Pipe for culverts and storm drains shall be the sizes indicated and shall conform to the requirements specified below:

Usage	Pipe Size	Type Pipe Allowed
Downspout Drains	150-200 mm (6-8 inch) (See Grading Plan	Cast Iron Soil Pipe (see Sec 02531 Sanitary Sewers, PVC, PE (smooth walled)
Storm Drains & Culverts	450-1830 mm (18-72 inch)	PE, PVC, RCP, Extra Strength Clay; Precast Reinforced Box
Tunnel Boring DL #DAA Sta 0+50 to 2+95	**1500 mm (60")**	**HDPE Gravity Sewer pipe, or CFRPM Pipe**

Usage	Pipe Size	Type Pipe Allowed
Microtunneling DL #DAA Sta 0+50 to 2+95	**1350 mm (54")**	**Centrifugally Cast Fiberglass Reinforced Polymer Mortar (CCFRPM) Pipe for Tunnel Carrier Installation - Gravity Service**

2.1.1 Pipes for Microtunneling

Pipes for Microtunneling shall be Centrifugally Cast Fiberglass Reinforced Polymer Mortar Pipe (CCFRPM) conforming to ASTM D 3262, ASTM D 4161 and ASTM D 2412.

2.1.1.1 CCFRPM

a. Resin Systems: The manufacturer shall use only polyester resin systems with a proven history of performance in this particular application. The historical data shall have been acquired from a composite material of similar construction and composition as the proposed product.

b. Glass Reinforcements: The reinforcing glass fibers used to manufacture the components shall be of highest quality commercial grade E-glass filaments with binder and sizing compatible with impregnating resins.

c. Silica Sand: Sand shall be minimum 98% silica with a maximum moisture content of 0.2%.

d. Additives: Resin additives, such as curing agents, pigments, dyes, fillers, thixotropic agents, etc., when used, shall not detrimentally effect the performance of the product.

e. Elastomeric Gaskets: Gaskets shall be supplied by qualified gasket manufacturers and be suitable for the service intended.

2.1.1.2 Manufacture and Construction

a. Pipes: Manufacturer pipe by the centrifugal casting process to result in dense, nonporous, corrosion-resistant, consistent composite structure.

b. Joints: Unless otherwise specified, the pipe shall be field connected with fiberglass sleeve couplings or bell-spigot joints, "flush" or "non-flush", that utilize elastomeric sealing gaskets as the sole means to maintain joint watertightness. The joints must meet the performance requirements of ASTM D 4161. Joints at tie-ins, when needed, may utilize fiberglass, gasket-sealed closure couplings.

c. Fittings: Flanges, elbows, reducers, tees, wyes, laterals and other fittings shall be capable of withstanding all operating conditions when installed. They may be contacted molded or manufactured from mitered sections of pipe joined by glass-fiber-reinforced overlays. Properly protected standard ductile iron, fusion-bonded epoxy-coated steel and stainless steel fittings may also be used.

d. Acceptable Manufacturer: Hobas Pipe USA, Inc.

2.1.1.3 Dimensions

a. Diameters: The actual outside diameter 457 mm to 1219 mm (18 inch to 48 inch) of the pipes shall be in accordance with ASTM D 3262. For other diameters, OD's shall be per manufacturer's literature.

b. Lengths: Pipe shall be supplied in nominal lengths of 6 m (20 feet). When required by radius curves, pit size, or other limitations restrict the pipe to shorter lengths, nominal sections of 3 m (10 feet) or other even divisions of 6 m (20 feet) shall be used. At least 90% of the total footage of each size and class of pipe, excluding special order lengths, shall be furnished in nominal length sections.

c. Wall Thickness: The minimum wall thickness shall be the stated design thickness.

d. End Squareness: Pipe ends shall be square to the pipe axis with a maximum tolerance of 3 mm (1/8 inch).

2.1.2 Concrete Pipe

ASTM C 76M , Class III or IV.

2.1.3 Clay Pipe

Extra strength, conforming to ASTM C 700.

2.1.4 PVC Pipe

The pipe manufacturer's resin certification, indicating the cell classification of PVC used to manufacture the pipe, shall be submitted prior to installation of the pipe.

2.1.4.1 Type PSM PVC Pipe

ASTM D 3034, Type PSM, maximum SDR 35, produced from PVC certified by the compounder as meeting the requirements of ASTM D 1784, minimum cell class 12454-B.

2.1.4.2 Smooth Wall PVC Pipe

ASTM F 679 produced from PVC certified by the compounder as meeting the requirements of ASTM D 1784, minimum cell class 12454-B.

2.1.5 PE Pipe

The pipe manufacturer's resin certification indicating the cell classification of PE used to manufacture the pipe shall be submitted prior to installation of the pipe. The minimum cell classification for polyethylene plastic shall apply to each of the seven primary properties of the cell classification limits in accordance with ASTM D 3350.

2.1.5.1 Smooth Wall PE Pipe

ASTM F 714, maximum DR of 21 for pipes 80 to 600 mm in diameter and maximum DR of 26 for pipes 650 to 1200 mm in diameter. Pipe shall be produced from

PE certified by the resin producer as meeting the requirements of ASTM D 3350, minimum cell class 335434C.

2.1.5.2 Corrugated PE Pipe

Couplings for corrugated pipe: Bell and spigot couplings or clamp on bends with corrugations which align will the pipe corrugation shall be provided at the joints. Couplings for Type HC pipe: Type HC pipe shall be joined by a bell-bell coupling. The coupling may be welded on one end of each length of pipe.

Couplings for pipe diameters 1050 mm (42 in) and larger shall be bell and spigot (bell-bell).

Pipe Requirements:

4-10 inch (100 to 250 mm) shall meet AASHTO M 252, Type S
12-48-inch (300 to 1200 mm) shall meet AASHTO M 294, Type S
54-and 60-inch (1350 and 1500 mm) shall meet AASHTO MP7-97

Pipe walls shall have the following properties:

2.1.5.3 Corrugated PE Pipe

Pipe Requirements

4-to 10-inch (100 to 250 mm) shall meet AASHTO M 252, Type S
12-to 48-inch (300 to 1200 mm) shall be AASHTO M 294, Type S
54- and 60-inch (1350 and 1500 mm) shall meet AASHTO MP7-97
Manning's "n" value for use in design shall not be less than 0.010.

While wall profiles shall have the following minimum properties:

Nominal Diameter (In.)	Minimum Wall Area (square in/ft)	Minimum Moment of Inertia (in. to the 4/In)
12	1.50	0.024
15	1.91	0.053
18	2.34	0.062
24	3.14	0.116
30	3.92	0.183
36	4.50	0.222
42	4.69	0.543
46	5.15	0.543
54	5.67	0.827
60	8.45	1.008

Material Properties

Pipe and fitting material shall be high-density polyethylene meeting ASTM D 3350 minimum cell classification 324420C for 4-through 10 inch (100 to 250 mm) diameters or 335420C for 12-through 80-inch (300 to 1500 mm) diameters.

2.1.5.4 Profile Wall PE Pipe

ASTM F 894, RSC 160, produced from PE certified by the resin producer as meeting the requirements of ASTM D 3350, minimum cell class 334433C. Pipe walls shall have the following properties:

Nominal Size (mm)	Minimum Wall Area (square mm/m)	Minimum Moment Of Inertia of Wall Section (mm to the 4th/mm) Cell Class 334433C	Cell Class 335434C
450	6300	850	620
525	8800	1150	840
600	9900	1330	970
675	12500	2050	1490
750	12500	2050	1490
825	14800	2640	2160
900	17100	3310	2700
1050	16500	4540	3720
1200	18700	5540	4540

2.1.6 Cast Iron Soil Pipe

Cast iron soil pipe meeting the requirements of ASTM A 74 shall be used for downspout drains with less than 305 mm (12 inch) cover (in grassed areas) & less than 457 mm (18 inch) cover (in paved and/or traffic areas). Pipe class type of joints and installation procedures shall be as specified in Section 02531 SANITARY SEWERS.

2.1.7 Pipes for Hydraulically Guided Auger Boring (HGAB)

a. Pipes and fittings for HGAB shall be CCFRPM or HDPE gravity sewer pipe and fittings in nominal size 1500mm (60").

b. HDPE gravity sewer pipe and fittings for HGAB shall conform to ASTM F 894, RSC 160, min. cell class 335444C, Type III, Class C, Category 5, Grade P34 produced from PE certified by the resin producer as meeting the requirements of ASTM D 1248.

c. Rubber gaskets shall comply in all respects with the physical requirements specified in the non-pressure requirements of ASTM F 477. They shall be molded or produced from an extruded shape approved by the manufacturer and spliced into circular form.

d. The lubricant used for assembly shall be as recommended by the pipe manufacturer and have no detrimental effect on the gasket or on the pipe.

2.2 DRAINAGE STRUCTURES

2.2.1 Precast Reinforced Concrete Box

For highway loadings with 600 mm of cover or more or subjected to dead load only, ASTM C 789; for less than 600 mm of cover subjected to highway loading, ASTM C 850.

2.3 MISCELLANEOUS MATERIALS

2.3.1 Concrete

Unless otherwise specified, concrete and reinforced concrete shall conform to the requirements for 17.24 MPa (2500 psi) concrete under Section 03300 CAST-IN-PLACE STRUCTURAL CONCRETE. The concrete mixture shall have air content by volume of concrete, based on measurements made immediately after discharge from the mixer, of 3 to 6 percent. Air content shall be determined in accordance with ASTM C 231. The concrete covering over steel reinforcing shall not be less than 25 mm thick for covers and not less than 40 mm thick for walls and flooring. Concrete covering deposited directly against the ground shall have a thickness of at least 75 mm between steel and ground. Expansion-joint filler material shall conform to ASTM D 1751, or ASTM D 1752, or shall be resin-impregnated fiberboard conforming to the physical requirements of ASTM D 1752.

2.3.2 Mortar

Mortar for pipe joints, connections to other drainage structures, and brick or block construction shall conform to ASTM C 270, Type M, except that the maximum placement time shall be 1 hour. The quantity of water in the mixture shall be sufficient to produce a stiff workable mortar but in no case shall exceed 21 liters of water per sack of cement. Water shall be clean and free of harmful acids, alkalies, and organic impurities. The mortar shall be used within 30 minutes after the ingredients are mixed with water. The inside of the joint shall be wiped clean and finished smooth. The mortar head on the outside shall be protected from air and sun with a proper covering until satisfactorily cured.

2.3.3 Precast Concrete Segmental Blocks

Precast concrete segmental block shall conform to ASTM C 139, not more than 200 mm (8 inches) thick, not less than 200 mm (8 inches) long, and of such shape that joints can be sealed effectively and bonded with cement mortar.

2.3.4 Brick

Brick shall conform to ASTM C 62, Grade SW; ASTM C 55, Grade S-I or S-II; or ASTM C 32, Grade MS. Mortar for jointing and plastering shall consist of one part portland cement and two parts fine sand. Lime may be added to the mortar in a quantity not more than 25 percent of the volume of cement. The joints shall be filled completely and shall be smooth and free from surplus mortar on the inside of the structure. Brick structures shall be plastered with 10 mm of mortar over the entire outside surface of the walls. For square or rectangular structures, brick shall be laid in stretcher courses with a header course every sixth course. For round structures, brick shall be laid radially with every sixth course a stretcher course.

2.3.5 Precast Reinforced Concrete Manholes

Precast reinforced concrete manholes shall conform to ASTM C 478M . Joints between precast concrete risers and tops shall be full-bedded in cement mortar and shall be smoothed to a uniform surface on both interior and exterior of the structure or made with flexible, rubber-type gaskets meeting the requirements of paragraph JOINTS.

2.3.6 Frame and Cover for Gratings

Frame and cover for gratings shall be cast gray iron, ASTM A 48, Class 35B; cast ductile iron, ASTM A 536, Grade 65-45-12. Weight, shape, size, and waterway openings for grates and curb inlets shall be as indicated on the plans.

2.3.7 Joints

2.3.7.1 Flexible Joints

Materials: Flexible joints shall be made with plastic or rubber-type gaskets for concrete pipe and with factory-fabricated resilient materials for clay pipe. The design of joints and the physical requirements for plastic gaskets shall conform to AASHTO M 198, and rubber-type gaskets shall conform to ASTM C 443. Factory-fabricated resilient joint materials shall conform to ASTM C 425. Gaskets shall have not more than one factory-fabricated splice, except that two factory-fabricated splices of the rubber-type gasket are permitted if the nominal diameter of the pipe being gasketed exceeds 1.35 m (54 inches).

2.3.7.2 PVC Plastic Pipes

Joints shall be solvent cement or elastomeric gasket type in accordance with the specification for the pipe and as recommended by the pipe manufacturer.

2.3.7.3 Smooth Wall PE Plastic Pipe

Pipe shall be joined using butt fusion method as recommended by the pipe manufacturer.

2.3.7.4 Corrugated PE Plastic Pipe

Water tight joints shall be made using a PVC or PC coupling and rubber gaskets as recommended by the pipe manufacturer. Rubber gaskets shall conform to ASTM F 477.

2.3.7.5 Profile Wall PE Plastic Pipe

Joints shall be gasketed or thermal weld type with integral bell in accordance with ASTM F 894.

2.4 STEEL LADDER

Steel ladder shall be provided where the depth of the manhole exceeds 1 m (3 feet). These ladders shall be not less than 406 mm (16 inches) in width, with 19 mm (3/4 inch) diameter rungs spaced 305 mm (12 inches) apart. The two stringers shall be a minimum 10 mm (3/8 inch) thick and 63 mm (2-1/2 inches) wide. Ladders and inserts shall be fabricated of type 316 stainless steel in conformance with ASTM A 276.

2.5 DOWNSPOUT BOOTS

Boots used to connect exterior downspouts to the storm-drainage system shall be of gray cast iron conforming to ASTM A 48, Class 30B or 35B. Shape and size shall be as indicated.

PART 3 EXECUTION

3.1 EXCAVATION FOR PIPE CULVERTS, STORM DRAINS, AND DRAINAGE STRUCTURES

Excavation of trenches, and for appurtenances and backfilling for culverts and storm drains, shall be in accordance with the applicable portions of Section 02316 EXCAVATION, TRENCHING, AND BACKFILLING FOR UTILITIES SYSTEMS Section 02300 EARTHWORK and the requirements specified below.

3.1.1 Trenching

The width of trenches at any point below the top of the pipe shall be not greater than the outside diameter of the pipe plus 610 mm (24 inches) to permit satisfactory jointing and thorough tamping of the bedding material under and around the pipe. Sheeting and bracing, where required, shall be placed within the trench width as specified. Contractor shall not overexcavate. Where trench widths are exceeded, redesign with a resultant increase in cost of stronger pipe or special installation procedures will be necessary. Cost of this redesign and increased cost of pipe or installation shall be borne by the Contractor without additional cost to the Government.

3.1.2 Removal of Rock

Rock in either ledge or boulder formation shall be replaced with suitable materials to provide a compacted earth cushion having a thickness between unremoved rock and the pipe of at least 200 mm or 13 mm for each meter of fill over the top of the pipe, whichever is greater, but not more than three-fourths the nominal diameter of the pipe. Where bell-and-spigot pipe is used, the cushion shall be maintained under the bell as well as under the straight portion of the pipe. Rock excavation shall be as specified and defined in Section 02316 EXCAVATION, TRENCHING, AND BACKFILLING FOR UTILITIES SYSTEMS.

3.1.3 Removal of Unstable Material

Where wet or otherwise unstable soil incapable of properly supporting the pipe, as determined by the Contracting Officer, is unexpectedly encountered in the bottom of a trench, such material shall be removed to the depth required and replaced to the proper grade with select granular material (S4C), compacted as provided in paragraph BACKFILLING. When removal of unstable material is due to the fault or neglect of the Contractor in his performance of shoring and sheeting, water removal, or other specified requirements, such removal and replacement shall be performed at no additional cost to the government.

3.2 BEDDING

The bedding surface for the pipe shall provide a firm foundation of uniform density throughout the entire length of the pipe.

3.2.1 Concrete Pipe Requirements

Concrete pipe shall be completed bedded with minimum 300 mm (12 inch) of 3B coarse aggregate around entire pipe or as approved by the Contracting Officer. When necessary, the bedding shall be tamped. Bell holes and depressions for joints shall be not more than the length, depth, and width required for properly making the particular type of joint.

3.2.2 Clay Pipe Requirements

Bedding for clay pipe shall be as specified by ASTM C 12.

3.2.3 Ductile Iron Pipe

Bedding for ductile iron pipe shall be as shown on the drawings.

3.2.4 Plastic Pipe

Bedding for PVC and PE pipe shall meet the requirements of ASTM D 2321. Bedding, haunching, and initial backfill shall be either Class IB or II material.

3.3 PLACING PIPE

Each pipe shall be thoroughly examined before being laid; defective or damaged pipe shall not be used. Plastic pipe shall be protected from exposure to direct sunlight prior to laying, if necessary to maintain adequate pipe stiffness and meet installation deflection requirements. Pipelines shall be laid to the grades and alignment indicated. Proper facilities shall be provided for lowering sections of pipe into trenches. Lifting lugs in vertically elongated metal pipe shall be placed in the same vertical plane as the major axis of the pipe. Pipe shall not be laid in water, and pipe shall not be laid when trench conditions or weather are unsuitable for such work. Diversion of drainage or dewatering of trenches during construction shall be provided as necessary. Deflection of installed flexible pipe shall not exceed the following limits:

TYPE OF PIPE	MAXIMUM ALLOWABLE DEFLECTION (%)
Ductile Iron Culvert	3
Plastic	7.5

Not less than 30 days after the completion of backfilling, the Contractor shall perform a deflection test on the entire length of installed flexible pipe using a mandrel or other suitable device. Installed flexible pipe showing deflections greater than those indicated above shall be retested by a run from the opposite direction. If the retest also fails, the suspect pipe shall be replaced at no cost to the Government.

3.3.1 Concrete, Clay, PVC and Ductile Iron Pipe

Laying shall proceed upgrade with spigot ends of bell-and-spigot pipe and tongue ends of tongue-and-groove pipe pointing in the direction of the flow.

3.3.2 Centrifugally Cast Fiberglass Reinforced Polymer Mortar Pipe (CCFRP)

a. Installation: The installation of pipe and fittings shall be in accordance with the project plans and specifications and the manufacturer's requirements (Section 14 E of the product brochure).

b. Pipe Grouting: Annular space grouting shall not damage the liner and shall conform to the manufacture's requirements (Section 14 E of product brochure).

c. Pipe Handling: Use textile slings, other suitable materials or a forklift. Use of chains or cables is not recommended.

d. Jointing:

1. Clean ends of pipe and coupling components.

2. Apply joint lubricant to pipe ends or bell interior surfaces and the elastomeric seals. Use only lubricants approved by the pipe manufacturer.

3. Use suitable equipment and end protection to push or pull the pipes together.

4. Do not exceed forces recommended by the manufacturer for joining or pushing pipe.

5. Join pipes in straight alignment then deflect to required angle. Do not allow the deflection angle to exceed the deflection permitted by the manufacturer.

3.3.3 Corrugated PE Pipe

Laying shall be with separate sections joined firmly on a bed shaped to line and grade and shall follow manufacturer's recommendations. When pipe is laid, ensure that the interior is reasonably uniform and as nearly circular as practical. Check structure shape regularly during backfilling to verify acceptability of the construction method used. Deflection of installed flexible pipe shall not exceed 7.5% of the base inside diameter as shown on the following table:

Base Inside Diameters and Minimum
Acceptable Diameter for 7.5% Deflection

Nominal Pipe Size		Minimum Inside Diameter		Base Diameter		Minimum Acceptable Diameter for 7.5% Deflection	
mm	(in.)	mm	(in.)	mm	(in.)	mm	(in.)
75	(3)	73.9	(2.9)	72.5	(2.9)	67.1	(2.6)
100	(4)	98.5	(3.9)	96.7	(3.8)	89.4	(3.5)
125	(5)	123.1	(4.8)	120.9	(4.8)	111.8	(4.4)
150	(6)	147.8	(5.8)	145.0	(5.7)	134.2	(5.3)
200	(8)	197.0	(7.8)	193.4	(7.6)	178.9	(7.0)
250	(10)	246.3	(9.7)	241.7	(9.5)	223.6	(8.8)
300	(12)	295.5	(11.6)	290.1	(11.4)	268.3	(10.6)
375	(15)	369.4	(14.5)	362.6	(14.3)	335.4	(13.2)
450	(18)	443.3	(17.5)	453.1	(17.1)	402.5	(15.8)
600	(24)	591.0	(23.3)	580.1	(22.8)	536.6	(21.1)
750	(30)	738.8	(29.1)	725.1	(28.5)	670.8	(26.4)
900	(36)	886.5	(34.9)	870.2	(34.3)	804.9	(31.7)
1050	(42)	1034.3	(40.7)	1015.2	(40.0)	939.1	(37.0)
1200	(48)	1182.0	(46.5)	1160.2	(45.7)	1073.2	(42.3)
1350	(54)	1329.8	(52.4)	1305.3	(51.4)	1207.4	(47.5)
1500	(60)	1477.5	(58.2)	1450.3	(57.1)	1341.5	(52.8)

3.3.4 Multiple Culverts

Where multiple lines of pipe are installed, adjacent sides of pipe shall be at least half the nominal pipe diameter or 1 meter apart, whichever is less.

3.3.5 Jacking Pipe Through Fills

Methods of operation and installation for jacking pipe through fills shall conform to requirements specified in Volume 1, Chapter 1, Part 4 of AREA-01.

3.3.6 Microtunneling

See microtunneling section of Specification Section 02316 EXCAVATION, TRENCHING AND BACKFILLLING FOR UTILITY SYSTEMS.

3.4 JOINTING

3.4.1 Concrete and Clay Pipe

3.4.1.1 Cement-Mortar Bell-and-Spigot Joint

The first pipe shall be bedded to the established gradeline, with the bell end placed upstream. The interior surface of the bell shall be thoroughly cleaned with a wet brush and the lower portion of the bell filled with mortar as required to bring inner surfaces of abutting pipes flush and even. The spigot end of each subsequent pipe shall be cleaned with a wet brush and uniformly matched into a bell so that sections are closely fitted. After each section is laid, the remainder of the joint shall be filled with mortar, and a bead shall be formed around the outside of the joint with sufficient additional mortar. If mortar is not sufficiently stiff to prevent appreciable slump before setting, the outside of the joint shall be wrapped or bandaged with cheesecloth to hold mortar in place.

3.4.1.2 Cement-Mortar Oakum Joint for Bell-and-Spigot Pipe

A closely twisted gasket shall be made of jute or oakum of the diameter required to support the spigot end of the pipe at the proper grade and to make the joint concentric. Joint packing shall be in one piece of sufficient length to pass around the pipe and lap at top. This gasket shall be thoroughly saturated with neat cement grout. The bell of the pipe shall be thoroughly cleaned with a wet brush, and the gasket shall be laid in the bell for the lower third of the circumference and covered with mortar. The spigot of the pipe shall be thoroughly cleaned with a wet brush, inserted in the bell, and carefully driven home. A small amount of mortar shall be inserted in the annular space for the upper two-thirds of the circumference. The gasket shall be lapped at the top of the pipe and driven home in the annular space with a caulking tool. The remainder of the annular space shall be filled completely with mortar and beveled at an angle of approximately 45 degrees with the outside of the bell. If mortar is not sufficiently stiff to prevent appreciable slump before setting, the outside of the joint thus made shall be wrapped with cheesecloth. Placing of this type of joint shall be kept at least five joints behind laying operations.

3.4.1.3 Cement-Mortar Diaper Joint for Bell-and-Spigot Pipe

The pipe shall be centered so that the annular space is uniform. The annular space shall be caulked with jute or oakum. Before caulking, the inside of the bell and the outside of the spigot shall be cleaned.

a. Diaper Bands: Diaper bands shall consist of heavy cloth

fabric to hold grout in place at joints and shall be cut in lengths that extend one-eighth of the circumference of pipe above the spring line on one side of the pipe and up to the spring line on the other side of the pipe. Longitudinal edges of fabric bands shall be rolled and stitched around two pieces of wire. Width of fabric bands shall be such that after fabric has been securely stitched around both edges on wires, the wires will be uniformly spaced not less than 200 mm apart. Wires shall be cut into lengths to pass around pipe with sufficient extra length for the ends to be twisted at top of pipe to hold the band securely in place; bands shall be accurately centered around lower portion of joint.

b. Grout: Grout shall be poured between band and pipe from the high side of band only, until grout rises to the top of band at the spring line of pipe, or as nearly so as possible, on the opposite side of pipe, to ensure a thorough sealing of joint around the portion of pipe covered by the band. Silt, slush, water, or polluted mortar grout forced up on the lower side shall be forced out by pouring, and removed.

c. Remainder of Joint: The remaining unfilled upper portion of the joint shall be filled with mortar and a bead formed around the outside of this upper portion of the joint with a sufficient amount of additional mortar. The diaper shall be left in place. Placing of this type of joint shall be kept at least five joints behind actual laying of pipe. No backfilling around joints shall be done until joints have been fully inspected and approved.

3.4.1.4 Cement-Mortar Tongue-and-Groove Joint

The first pipe shall be bedded carefully to the established gradeline with the groove upstream. A shallow excavation shall be made underneath the pipe at the joint and filled with mortar to provide a bed for the pipe. The grooved end of the first pipe shall be thoroughly cleaned with a wet brush, and a layer of soft mortar applied to the lower half of the groove. The tongue of the second pipe shall be cleaned with a wet brush; while in horizontal position, a layer of soft mortar shall be applied to the upper half of the tongue. The tongue end of the second pipe shall be inserted in the grooved end of the first pipe until mortar is squeezed out on interior and exterior surfaces. Sufficient mortar shall be used to fill the joint completely and to form a bead on the outside.

3.4.1.5 Cement-Mortar Diaper Joint for Tongue-and-Groove Pipe

The joint shall be of the type described for cement-mortar tongue-and-groove joint in this paragraph, except that the shallow excavation directly beneath the joint shall not be filled with mortar until after a gauze or cheesecloth band dipped in cement mortar has been wrapped around the outside of the joint. The cement-mortar bead at the joint shall be at least 15 mm, thick and the width of the diaper band shall be at least 200 mm. The diaper shall be left in place. Placing of this type of joint shall be kept at least five joints behind the actual laying of the pipe. Backfilling around the joints shall not be done until the joints have been fully inspected and approved.

3.4.1.6 Plastic Sealing Compound Joints for Tongue-and-Grooved Pipe

Sealing compounds shall follow the recommendation of the particular

manufacturer in regard to special installation requirements. Surfaces to receive lubricants, primers, or adhesives shall be dry and clean. Sealing compounds shall be affixed to the pipe not more than 3 hours prior to installation of the pipe, and shall be protected from the sun, blowing dust, and other deleterious agents at all times. Sealing compounds shall be inspected before installation of the pipe, and any loose or improperly affixed sealing compound shall be removed and replaced. The pipe shall be aligned with the previously installed pipe, and the joint pulled together. If, while making the joint with mastic-type sealant, a slight protrusion of the material is not visible along the entire inner and outer circumference of the joint when the joint is pulled up, the pipe shall be removed and the joint remade. After the joint is made, all inner protrusions shall be cut off flush with the inner surface of the pipe. If nonmastic-type sealant material is used, the "Squeeze-Out" requirement above will be waived.

3.4.1.7 Flexible Watertight Joints

Gaskets and jointing materials shall be as recommended by the particular manufacturer in regard to use of lubricants, cements, adhesives, and other special installation requirements. Surfaces to receive lubricants, cements, or adhesives shall be clean and dry. Gaskets and jointing materials shall be affixed to the pipe not more than 24 hours prior to the installation of the pipe, and shall be protected from the sun, blowing dust, and other deleterious agents at all times. Gaskets and jointing materials shall be inspected before installing the pipe; any loose or improperly affixed gaskets and jointing materials shall be removed and replaced. The pipe shall be aligned with the previously installed pipe, and the joint pushed home. If, while the joint is being made the gasket becomes visibly dislocated the pipe shall be removed and the joint remade.

3.5 DRAINAGE STRUCTURES

3.5.1 Manholes and Inlets

Construction shall be of reinforced concrete, plain concrete, brick, precast reinforced concrete or precast concrete segmental blocks, complete with frames and covers or gratings; and with fixed galvanized steel ladders where indicated. Pipe studs and junction chambers of prefabricated corrugated metal manholes shall be fully bituminous-coated and paved when the connecting branch lines are so treated.

3.5.2 Walls and Headwalls

Construction shall be as indicated.

3.6 STEEL LADDER INSTALLATION

Ladder shall be adequately anchored to the wall by means of steel inserts spaced not more than 1.83 m (6 feet) vertically, and shall be installed to provide at least 152 mm (6 inches) of space between the wall and the rungs. The wall along the line of the ladder shall be vertical for its entire length.

3.7 BACKFILLING

3.7.1 Backfilling Pipe in Trenches

After the pipe has been properly bedded, selected material from excavation or borrow, at a moisture content that will facilitate compaction, shall be

placed along both sides of pipe in loose lifts not exceeding 150 mm (6 inches). The backfill shall be brought up evenly on both sides of pipe for the full length of pipe. The fill shall be thoroughly compacted under the haunches of the pipe. Each layer shall be thoroughly compacted with mechanical tampers or rammers. This method of filling and compacting shall continue until the fill has reached an elevation of at least 300 mm above the top of the pipe. The remainder of the trench shall be backfilled and compacted by spreading and rolling or compacted by mechanical hand-operated rammers or tampers in loose layers not exceeding 150 mm (6 inches). Tests for density shall be made as necessary to ensure conformance to the compaction requirements specified below. Where it is necessary, in the opinion of the Contracting Officer, that sheeting or portions of bracing used be left in place, the contract will be adjusted accordingly. Untreated sheeting shall not be left in place beneath structures or pavements.

3.7.2 Backfilling Pipe in Fill Sections

For pipe placed in fill sections, backfill material and the placement and compaction procedures shall be as specified below. The fill material shall be uniformly spread in layers longitudinally on both sides of the pipe, not exceeding 150 mm in compacted depth, and shall be compacted by rolling parallel with pipe or by mechanical tamping or ramming. Prior to commencing normal filling operations, the crown width of the fill at a height of 300 mm above the top of the pipe shall extend a distance of not less than twice the outside pipe diameter on each side of the pipe or 4 m (12 feet), whichever is less. After the backfill has reached at least 300 mm above the top of the pipe, the remainder of the fill shall be placed and thoroughly compacted in layers not exceeding 150 mm (6 inches).

3.7.3 Movement of Construction Machinery

When compacting by rolling or operating heavy equipment parallel with the pipe, displacement of or injury to the pipe shall be avoided. Movement of construction machinery over a culvert or storm drain at any stage of construction shall be at the Contractor's risk. Any damaged pipe shall be repaired or replaced.

3.7.4 Compaction

3.7.4.1 General Requirements

Cohesionless materials include gravels, gravel-sand mixtures, sands, and gravelly sands. Cohesive materials include clayey and silty gravels, gravel-silt mixtures, clayey and silty sands, sand-clay mixtures, clays, silts, and very fine sands. When results of compaction tests for moisture-density relations are recorded on graphs, cohesionless soils will show straight lines or reverse-shaped moisture-density curves, and cohesive soils will show normal moisture-density curves.

3.7.4.2 Minimum Density

Backfill over and around the pipe and backfill around and adjacent to drainage structures shall be compacted at wet of optimum moisture content to the following applicable minimum density, which will be determined as specified below.

a. Under paved roads, streets, parking areas, and similar-use pavements including adjacent shoulder areas, the density shall be

not less than 90 percent of maximum density for cohesive material and 95 percent of maximum density for cohesionless material, up to .6 m (2 feet) felow finish sub-grade.

b. Under non-traffic areas, unpaved or turfed traffic areas, density shall not be less 90 percent of maximum density for cohesive material and 95 percent of maximum density for cohesionless material.

3.7.5 Determination of Density

Testing shall be the responsibility of the Contractor and performed at no additional cost to the Government. Testing shall be performed by an approved commercial testing laboratory or by the Contractor subject to approval. Tests shall be performed in sufficient number to ensure that specified density is being obtained. Laboratory tests for moisture-density shall be made in accordance with ASTM D 1557, Procedure C, for material that has no more than 30 percent retained on the 19 mm (3/4 inch) sieve and has more than 20 percent retained on the 9.5 mm (3/8 inch) sieve. Where the material does not meet gradation requirements, ASTM D 1557, method D, will be used. Field density tests shall be determined in accordance with ASTM D 1556 or ASTM D 2922. When ASTM D 2922 is used, the calibration curves shall be checked and adjusted, if necessary, using the sand cone method as described in paragraph Calibration of the referenced publications. ASTM D 2922 results in a wet unit weight of soil and when using this method ASTM D 3017 shall be used to determine the moisture content of the soil. The calibration curves furnished with the moisture gauges shall be checked along with density calibration checks as described in ASTM D 3017 or ASTM D 2922. Test results shall be furnished the Contracting Officer within 24 hours of conclusion of each test. The calibration checks of both the density and moisture gauges shall be made at the beginning of a job on each different type of material encountered and at intervals of 1 sand cone test for every nuclear gauge test or fraction thereof but not less than one per lift.

3.8 PIPELINE TESTING

3.8.1 **CCFRPM**

Deflection: Maximum allowable long-term deflection is 5 % of the initial diameter.

-- End of Section --

SECTION TABLE OF CONTENTS

DIVISION 02 - SITE WORK

SECTION 02731

TUNNELING

PART 1 GENERAL

1.1 REFERENCES
1.2 SYSTEM DESCRIPTION
1.3 DEFINITIONS
1.3.1 Hydraulic Guided Auger Boring
1.3.2 Surface Settlement Points
1.3.3 Emergency Pit
1.4 DESIGN CRITERIA
1.5 SUBMITTALS
1.6 CRITERIA FOR DETERMINING CONSTRUCTION LOADS
1.6.1 Calculations
1.6.2 Compatibility of Methods
1.7 JOB CONDITION
1.7.1 Safety Requirements
1.7.2 Air Quality
1.7.3 Ground Conditions
1.8 TUNNELING QUALIFICATION

PART 2 PRODUCTS

2.1 MATERIAL
2.1.1 Tunnel Boring Machine (TBM) Equipment
2.1.1.1 Auger Boring Machine
2.1.2 Steel Casing Pipe
2.1.3 Pipe

PART 3 EXECUTION

3.1 PREPARATION
3.2 EQUIPMENT
3.2.1 Tunnel Boring Machine (TBM)
3.2.2 Pipe Jacking Equipment
3.3 TUNNEL BOIRNG PROCEDURES
3.3.1 Casing Installation
3.3.2 Safety
3.3.3 Equipment
3.3.4 Thrust Block
3.3.5 Launching Seals
3.3.6 Recovery Shafts
3.3.7 Temporary Ventilation
3.3.8 Spoil Transport and Disposal
3.3.9 Remote Control System
3.3.10 Shafts
3.3.11 Grouting
3.4 CONTROL OF LINE AND GRADE
3.4.1 Construction and Control

3.4.2 Leakage Testing
3.4.3 Surface Settlement
3.4.4 Monitoring
3.4.5 Surface Settlement Points
3.4.6 Pre-and Post Construction Survey
3.4.6.1 Pre-Construction Survey
3.4.6.2 Post-Construction Survey
3.4.6.3 Final Report
3.4.7 Cleanup and Restoration
3.4.8 Disposal of Excess Material
3.4.9 Construction Area Appearance

-- End of Section Table of Contents --

SECTION 02731

TUNNELING

PART 1 GENERAL

1.1 REFERENCES

The publications listed below form a part of this specification to the extent referenced. The publications are referred to in the text by basic designation only.

AMERICAN SOCIETY FOR TESTING AND MATERIALS (ASTM)

ASTM A 139	Specification for Electric - Fusion (Arc) - Welded Steel Pipe (NPS 4 and over)

AMERICAN PIPE INSTITUTE

API Spec 2B	Fabrication of Structural Steel Pipe

OCCUPATIONAL SAFETY AND HEALTH ADMINISTRATION (OSHA)

29 CFR Part 1926, Subpart S	Regulations and Standards for Underground Construction

1.2 SYSTEM DESCRIPTION

This section provides the minimum requirements for the trenchless installation of storm drainage pipe (drainline #DAA Sta 0 + 50 to 2 + 95) by tunnel boring machine (TBM) methods (see section 02200 for Microtunneling method (if used). The Contractor shall use hydraulically guided auger boring to install the 1500 mm storm drainage pipe. Contractor shall be responsible for the final constructed product, materials, and tools used, and for furnishing the labor and qualified operators and/or superintendents necessary for the selected method of construction. The Contractor shall furnish all items, including but not limited to, the Tunnel Boring Machine (TBM), pipe jacking equipment, grout equipment, automated spoils transportation system, hoists, signal system, safety equipment and survey controls, necessary to excavate and advance the tunnel and construct the storm drainage system. The Contractor is responsible for verifying existing utility locations, routing the new pipe layout so as to not interfere with the existing utilities, and taking all precautions necessary to protect existing utilities from damage. Repair any utilities damaged by tunneling immediately, at no additional cost to the Government.

1.3 DEFINITIONS

1.3.1 Hydraulic Guided Auger Boring

Auger boring or horizontal earth boring is an underground method of constructing pipelines by first installing a steel casing by jacking, while simultaneously removing the spoil through the pipe using a string of horizontal augers.

1.3.2 Surface Settlement Points

Survey control points established at the ground surface along the pipe alignment for monitoring surface settlement due to subsurface excavation.

1.3.3 Emergency Pit

A shaft or structure installed along the pipe string to retrieve the TBM, perform maintenance not originally planned, or due to any unforeseen obstructions. These shafts are installed and eased for the convenience of the Contractor with the permission of the Contracting Officer. Permits, access, restoration and other costs shall be at no cost to the Government.

1.4 DESIGN CRITERIA

a. Hydraulic Guided Auger Boring equipment, or tunnel boring machines (TBM) may be used for drainline #DAA from Sta 0+50 to 2+95 in lieu of microtunneling only if the drainline size is increased to 1500mm (60") and an 1800mm (72") sleeve is used.

b. Tunneling equipment selected for the project shall be designed and constructed to handle the geologic conditions described in the GEOTECHNICAL REPORT.

c. The TBM shall be capable of minimizing loss of ground, and settlement or heave of the ground surface during tunneling. Control ground surface settlement or heave above the pipeline to 12 mm (1/2 inch) or less. Slurry or lubricant blow out to the surface will not be permitted. The Contractor shall repair any damage resulting from surface settlement or heave caused by auger boring, jacking, shaft excavation, dewatering, and receiving pit excavation, and other actions connected with the TBM at no additional cost to the Government.

d. The thrust block shall be constructed perpendicular to the proposed pipe alignment and shall be designed to withstand the maximum jacking pressure to be used, with a factor of safety of at least 2.5, without excessive deflection or displacement.

1.5 SUBMITTALS

Government approval is required for all submittals with a "GA" designation; submittals having an "FIO" designation are for information only. The following shall be submitted in accordance with Section 01330 SUBMITTAL PROCEDURES:

SD-01 Data

Tunneling Work Plan; GA.

Prior to construction, the Contractor shall submit for review documents showing the methods and materials to be used for the installation of tunneling pipe. Review and acceptance of the Contractor submittals by the Contracting Officer shall not be construed in any way as relieving the Contractor of his/her responsibilities under this Contract. Contractor shall not commence work on any items requiring a Tunneling Work Plan or other submittals until the submittals have been reviewed and accepted by the Contracting Officer. Structural designs and other engineered components shall be signed and sealed by a Professional Structural Engineer registered in the State of Hawaii.

The Contractor shall submit, no later than 30 calendar days after Contract Notice-to-Proceed date, for review, a Tunneling Work Plan with complete drawings and written description detailing the proposed method of construction, equipment to be used, and sequence of operations to be performed during construction. The drawings and descriptions shall be sufficiently detailed to demonstrate to the Contracting Officer whether the proposed materials and procedures will meet the requirements of these specifications. The Tunneling Work Plan, including drawings, shall be submitted on the following items:

a. A detailed description of the auger boring equipment and procedures to be employed. Provide manufacturer's literature describing in detail the auger boring system to be used including machine type, spoil removal system, surveying procedures for auger boring machine, and provisions for injecting pipe lubricants. Describe machine capabilities and procedures for underground excavation and minimize loss of ground. Provide descriptions of at least two projects on which this system has been successfully used including names, addresses, and telephone numbers of owner's representatives for these projects as well as length, diameter, pipe material used, project cost, and geologic conditions encountered.

b. Schedule for auger boring work identifying all major construction activities as independent items. The schedule shall include as a minimum the following activities: mobilization: shaft excavation and excavation support; jacking equipment setup; installation of sewer pipe inside steel casing, grouting of annulus between steel casing and sewer pipe; site restoration; cleanup; and demobilization. The schedule shall also include the working hours for each activity, and a written description of the construction methods and equipment, to be employed in completing each of the work activities shown on the schedule. The schedule shall be reviewed with the Engineer and be updated and resubmitted by the Contractor on a bi-weekly basis.

c. Provide a description of the line and grade control procedures and method for monitoring line and grade for the auger boring machine. Submit a description of surveying methods to determine the line and grade of the centerline of the steel casing invert at 10 feet intervals during auger boring. Confirm that these systems can achieve the required pipeline line and grade within the specified tolerances. Submit name and resume of surveyor who will be responsible for setting survey control and laser for pipe installation.

d. A description of the grade and alignment control system.

e. Description of ventilation system and calculations.

f. Description of lighting and electrical system.

g. Description of method and details to control and dispose of spoil and slurry. Include handling, separation, transport and disposal, equipment and procedures. Also include details of the slurry weight and viscosity and any slurry additives, slurry separation plant and the location of slurry and commercial spoil disposal site(s). Provide written documentation from the disposal site(s) indicating they will accept the spoil or slurry and are in compliance with State regulations.

h. Details of pipe jacking method and operation including jack setup for jack thrust reaction bearing. Submit thrust block design and

details. Submit calculations demonstrating that the block can transfer the maximum planned force developed by the main jacks to the ground without excessive movements.

i. Capacity, number and arrangement of main jacks. Provide details of thrust ring, jacking controls, and pressure gages. Provide the maximum anticipated jacking load required to complete each drive and the supporting calculations. Calculations should take into account face excavation forces, friction factor, and weight of TBM and pipes.

j. Details of pipe lubrication injection system and pipe lubricants to be used during auger boring, including manufacturer's literature.

k. A description of the details, methods and procedures for installing the drain pipe inside the jacked casing pipe to meet specified line and grade requirements, details of spacers or blocking system, including materials and spacing distances, grout mix and strength, and grouting procedures for filling the annulus between the steel casing and the carrier pipe.

l. Description of method(s) for temporary shoring and disposal of materials encountered in the construction and maintenance of pits.

m. Details of pit dimensions, locations, surface construction, profile, depth, method of excavation, shoring, bracing, and thrust block design.

n. A safety plan for the auger boring operations including provisions for ventilation, and electrical system safeguards. Provide name of site safety representative responsible for implementing safety program.

o. Procedure for measuring excavation quantities versus forward progress during the tunneling operation.

p. Instructions for storage, handling, and installation including means of transporting pipe to jacking pit.

q. Approved repair method from pipe supplier for in-place repair of damaged pipe.

r. Sample of automated data logging and daily submittals of machine data reports.

s. Grouting materials and techniques to be used for over excavation and/or annular space, if any, including grouting equipment, pumping and injection procedures, pressure grout types and mixtures.

t. A detailed plan for monitoring ground surface settlement due to the tunneling operation, including methods, procedures, and location of settlement monitoring points in accordance with Paragraph 3.8 MONITORING. Ground movement monitoring shall also include areas adjacent to jacking, receiving and intermediate pits.

u. Provide a general plan, procedures, and details for constructing recovery shafts to retrieve the TBM or remove obstructions that are encountered during tunneling.

Design Calculations; FIO

Submit design calculations demonstrating that the selected steel casing can withstand the maximum anticipated jacking forces, earth loads, and superimposed live loads which may be imposed on the pipe during installation. The calculations shall clearly indicate the maximum allowable jacking force which can be applied to the casing taking into account load eccentricity due to steering or alignment deviations. Upgrade the strength of the casing and casing joints as necessary to withstand the additional stresses imposed by the casing handling and anticipated jacking loads.

Calculations demonstrating the proposed thrust block can transfer the maximum planned jacking forces safely to the soils behind the wall with the required factor of safety.

SD-09 Reports and Records

Reports and Records; GA.

Submit survey measurements of surface settlement points to the Engineer by the end of the same day that measurements are taken.

Automated data logs to construction events and observations shall be submitted for each shift within 24 hours of the operations on at least the following:

a. Location of TBM face by station and progress of tunnel drive during shift.

b. Hours worked per shift.

c. Completed field forms for checking line and grade, with achieved tolerance relative to design alignment. Copies of steering control data will generally be acceptable.

d. Survey reports, records, and shift reports indicating thrust force, cutterhead torque, rate of advance, line and grade deviation, roll, inclination, steering adjustments, and other pertinent information. Submit the following day for each shift worked.

e. Amount of lubrication pumped per foot of pipe and cumulative total. Written records shall also record any slurry losses or other unusual occurrences.

f. Location and brief soil descriptions of significant soil strata.

g. Amount of spoil removed per foot of pipe and cumulative total.

h. Observation of lost ground or other ground movement.

i. Indications of damaged pipe joint on pipe.

j. Any unusual conditions or event.

Quality Control Methods; FIO.

At least 30 calendar days prior to the start of tunneling, the contractor shall submit to the Contracting Officer a description of the quality control methods proposed for tunneling operation. The submittal shall include:

a. Line and Grade. Procedures for surveying, controlling and checking initial setup and tunnel line and grade, including field forms.

b. Tunneling Observation and Monitoring. Procedures for preparing and submitting daily logs of tunneling operations, including field forms, to meet the requirements of Paragraph MONITORING.

c. Products and Materials. A plan for testing and submittal of test results to demonstrate compliance with the specifications and contractor's design criteria for permanent products, materials, and installations. The plan shall identify applicable standards and procedures for testing and acceptance.

d. Settlement Survey Plan to meet the requirements of Paragraph MONITORING.

e. Building Condition/Assessment Plans. Building Condition/Assessment plan to meet the requirements of Paragraph 402.10(I), Buildings and Structures Assessment.

Personnel Qualifications; FIO

All auger boring work shall be performed by an experienced contractor or subcontractor who has completed at least two similar projects in the last five(5) years.

The auger boring work shall be performed under the supervision of an experienced project superintendent who has at least 5 years of experience in pipeline construction involving auger boring for pipeline construction. The machine operator(s) shall have completed at least two similar auger boring projects involving at least 30 m (100 feet) of auger boring each.

Geotechnical; FIO.

The results of any Geotechnical investigations performed by a contractor as relevant to tunneling shall be included in the Tunneling Work Plan.

Safety; FIO.

Procedures to meet all current applicable regulations of the federal, state and local agencies, including, but not limited to, 29 CFR Part 1926, Subpart S Underground Construction by OSHA. These procedures shall be submitted for record purpose only and will not be subject to approval by the Contracting Officer. As a minimum, provide for:

a. Protection against soil instability and groundwater inflow

b. Safety for shaft access and exit, including ladders, stairs, walkways, and hoists.

c. Protection against mechanical and hydraulic equipment operations, and for lifting and hoisting equipment and material.

d. Ventilation and lighting.

e. Monitoring for hazardous gases.

f. Protection against flooding and means for emergency evacuation.

g. Protection of shaft including traffic barriers, accidental or unauthorized entry, and falling objects.

h. Emergency protection equipment.

i. Safety supervising responsibilities.

Submit a settlement surveying and monitoring plan for review 30 calendar days prior To performing any tunneling or excavation work. The plan shall identify the methods, procedures and location or settlement monitoring points, reference benchmarks, survey schedules and procedures and reporting formats.

Ground Surface Monitoring Plan; FIO.

Building and Structural Assessment Plan; GA

The contractor shall submit for review prior to construction, a Building and Structures Assessment Plan. Pre-construction and post-construction assessment reports shall be provided for buildings and structures located within a distance equal to one and one-half (1-1/2 times) the depth of tunnel but at least (7.6 m) in plan from the proposed tunnel centerline and shafts or as directed by the Contracting Officer. Photographs and a video of any existing damage to structures in the vicinity of the sewer alignment shall be included in the assessment reports.

Building and Structure Assessment; GA

The contractor shall submit for review prior to construction, a Building and Structures Assessment Plan. Pre-construction and post-construction assessment reports shall be provided for buildings and structures located within a distance equal to one and one-half (1-1/2 times) the depth of tunnel but at least (7.6 m) in plan from the proposed tunnel centerline video of any existing damage to structures in the vicinity of the sewer alignment shall be included in the assessment reports.

1.6 CRITERIA FOR DETERMINING CONSTRUCTION LOADS

The criteria to be used for determination of construction loads shall take into account, as a minimum, the loading criteria provided in the drawings; long-term earth and hydrostatic loads; construction loads, such as erection and jacking forces; loads from handling and storing; and space necessary to install permanent structures.

The criteria to be used for truck loading shall be HS-20 vehicle loading distributions in accordance with AASHTO.

The criteria for longitudinal loading (jacking forces) on the pipe and joints shall be determined by the contractor, based on the selected method of construction.

1.6.1 Calculations

The jacking equipment installed must have a capacity at least 20 percent greater than the calculated theoretical maximum jacking load.

The contractor shall be responsible for selection of the appropriate pipe and pipe joints to carry the thrust of the jacks. Unless otherwise noted,

any design indicated on the drawings considers in-place loads only and does not take into account any construction loads.

Provide pipes of diameter shown on the drawings. Substitution of pipe with larger diameter to suit TBM equipment will be permitted if (1) the contractor can demonstrate that design flows and velocities can be achieved, (2) specific project constraints are met such as shaft size, equipment footprint, MH distances and other conditions as may be required by the Contracting Officer.

1.6.2 Compatibility of Methods

The methods of tunneling, pipe jacking and ground stabilization shall be compatible.

The jacked pipe shall be selected to withstand the thrust without damage or distortion. The propulsion jacks on the shield shall be configured so that the thrust is uniformly distributed and will not damage or distort the pipe.

The tunneling method must be compatible with possible restrictions on the work, such as influence on existing installations, or potential groundwater contamination, if any.

1.7 JOB CONDITION

1.7.1 Safety Requirements

Perform work in a manner to maximize safety and avoid exposure of workers and equipment to hazardous and potentially hazardous conditions, in accordance with applicable safety standards and contractor's safety procedures.

Perform tunneling operations in a manner that will minimize the movement of the ground in front of and surrounding the tunnel. Minimize subsidence of the surface. Prevent damage of structures and utilities above and in the vicinity of the tunneling operations.

Support the ground continuously in a manner to prevent loss of ground and keep the perimeters and faces of the tunnel and bottoms of the shaft stable.

1.7.2 Air Quality

Conduct operations by methods and with equipment that will positively control dust, fumes, vapors, gases, or other atmospheric impurities in accordance with OSHA, Federal, and State requirements.

Provide approved instrumentation for testing the quality of the air in manned work areas. Obtain samples under working conditions at prescribed intervals in accordance with the above referenced requirements. Submit the results of the air quality tests to the Contracting Officer each week.

1.7.3 Ground Conditions

Perform sufficient analysis of the completed soil exploration reports, boring logs and environmental reports in advance of construction to define parameters for design of pipe installations, planning and design of groundwater control system, and for selection of tunneling method and equipment for successful completion of each tunneling reach. Perform any necessary ground improvements in areas with weak or unstable soils.

1.8 TUNNELING QUALIFICATION

All auger boring work shall be performed by an experienced contractor or subcontractor with a minimum of five (5) years experience in this type of work.

All surveying work shall be performed by a land surveyor licensed in the state of Hawaii. The land surveyor monitoring surface settlement points shall have previous experience surveying for the detection of structural deformations and surface movements.

PART 2 PRODUCTS

2.1 MATERIAL

2.1.1 Tunnel Boring Machine (TBM) Equipment

2.1.1.1 Auger Boring Machine

The auger boring machine shall be of sufficient size and capacity for the diameter and length of the steel casing to be installed in the ground conditions described in the Government Report, and shall satisfy the following requirements:

a. The boring machine shall be capable of adequately supporting the face during excavation and shutdown periods and shall have the capability of preventing loss of ground at the face. The machine shall utilize an auger spoil removal system consisting of auger rotating inside the casing pipe.

b. The auger boring system shall have a method for controlling line and grade of the crossing. The Contractor shall provide accurately surveyed line and grade of the casing invert centerlines at every 3m (10 feet) interval, as the casing is installed.

c. The machine shall have a steering system that is steerable, at a minimum, in a vertical direction to maintain grade within the specified tolerances.

d. The machine shall be capable of advancing through the geologic conditions described in the Geotechnical Report. The cutter head shall be configured to excavate through clayey soils and weathered basalt as described in the Geotechnical Report with unconfined compressive strengths of .6895 Mpa (100 pounds per square inch (psi)), including mixed face conditions of hard cobbles, boulders up to 300 mm (12 inches) in maximum dimensions (with unconfined compressible strengths of 137.9 Mpa (20,000 psi), and cleyey soils. Use suitable rock bits, picks, cutters, and drag teeth as needed to excavate the ground. The auger boring system shall allow temporary removal of augers to provide access to the tunnel face for removal of obstructions or hard rock and boulders.

e. A pipe casing lubrication injection system shall be provided to inject pipe lubricants as required to minimize the thrust load.

f. The maximum allowable overcut shall not be greater than 25 mm (1 inch) larger in diameter than the outside diameter of the jacked pipe.

g. The jacking system shall be capable of continuously monitoring the jacking pressure, allow accurate measurement of the rate of advancement, and the distance jacked. The jacking system shall develop a uniform distribution of jacking on the end of the pipe.

2.1.2 Steel Casing Pipe

Steel casing jacking pipes shall be smooth, round, have an even outer surface, and joints that allow for easy connections between pipes. Pipe ends shall be square so that eccentric jacking loads are minimized when the pipe is installed. Pipe installed by auger boring shall be capable of withstanding that jacking forces that will be imposed on the pipe during installation. The driving ends of the jacking pipe shall be protected from damage during installation. The minimum casing wall thickness shall be 12 mm (1/2 inch). Selection of and design of the steel casing jacking pipe is the responsibility of the Contractor.

a. All steel pipe materials shall be new, straight seam pipe, and shall meet or exceed the tensile and yield requirements as specified in ASTM A 139 Grade B.

b. The dimensional tolerances shall meet the requirements specified in the API Spec 2B, Fourth Edition, July 1, 1990, specification for the fabrication of structural steel pipe.

c. Field Joints: Connecting adjacent pieces of steel pipe during auger boring operations shall be achieved by continuous butt-welding at joints for rigid water-tight encasement or by integral press, fit connectors, as long as the loading and the installation design criteria are met.

2.1.3 Pipe

a. Storm drain pipe installed inside the jacked steel casing shall conform to the requirements of Section 02630 STORM DRAINAIGE SYSTEM of the Specifications.

b. Centrifugally Cast Fiberglass Reinforced Polymer Mortar Pipe (CCFRPM)) or High Density Polyethylene (HDPE) gravity sewer pipe installed by tunneling methods shall conform to Section 02630 STORM-DRAINAGE SYSTEM paragraph 2.1.1 or paragraph 2.1.7.

PART 3 EXECUTION

3.1 PREPARATION

The contractor shall be responsible for means and methods of tunneling and pipe jacking operations and shall ensure the safety of the work, the contractor's employees, the public and adjacent property, whether public or private.

Execute tunneling operations so that ground settlement heave or loss shall be (12 mm) or less. The completed drain pipe shall have full bearing against earth; no voids or pockets will be left in any portion of the work. If loss of ground occurs, fill the resulting void wit suitable material, such as grout, as accepted by the Contracting Officer. This may require stopping jacking operations and installing additional access shafts with no additional cost to the Government.

Maintain clean working conditions inside the jacking operation area and remove spoil, debris, equipment, and other material not required for operations, off of Government property in accordance with all applicable State regulations.

In man-entry-sized pipes,intermittent entry of personnel will be permitted for maintenance and removal of equipment provided that all safety precautions and adequate ventilation are in place and functional.

For tunneling under streets, perform the installation so as to minimize interference with the operation of the street.

Conduct all operations such that trucks and other construction vehicles do not create a dust nuisance in the streets and adjacent properties. Promptly clean up, remove, and dispose of any spoil or slurry spillage. Traffic control shall be provided and approved by the Contracting Officer.

All work performed shall be done with the least amount of disturbance to roadways, adjacent structures, landscaped areas,or utilities. Any damage resulting from the Contractor's actions shall be immediately repaired to the satisfaction of the agency or utility having jurisdiction, at no additional cost to the Government.

3.2 EQUIPMENT

No gasoline powered equipment shall be permitted in the tunneling operation or pits. Diesel, electrical, hydraulic, or air-powered equipment is acceptable, subject to applicable federal and state regulations.

Any methods or equipment that the contractor can demonstrate, based on past experience, will produce the specified results for the ground conditions will be considered.

3.2.1 Tunnel Boring Machine (TBM)

Auger boring shall not begin until the following has been completed:

a. Required submittals have been made and the Engineer has reviewed and accepted all submittals.

b. Required pre-construction surveys have been completed in accordance with the specified requirements.

c. Jacking and receiving pit excavation and support has been completed in accordance with Section 02201 SHAFT CONSTRUCTION of the Standard Specification.

3.2.2 Pipe Jacking Equipment

Provide a TBM operation that includes a pipe jacking system with the following features:

a. Has a jacking frame that successively pushed the TBM along with a string of connected pipes toward a receiving shaft.

b. Has sufficient jacking capacity to push the TBM and the string of pipe though the ground.

c. Have hydraulic cylinder extension rates that are synchronized with

the excavation rate of the TBM, as determined by the soil conditions.

d. Provides and maintains a pipe lubrication system at all times to lower the friction developed on the surface of the pipe during jacking.

3.3 TUNNEL BOIRNG PROCEDURES

3.3.1 Casing Installation

The casing shall be installed using auger boring methods between the jacking and receiving pits to the specified lines and grades and utilizing methods which include due regard for safety of workers, adjacent structures and improvements, utilities, and the public.

a. Casing installation shall be completed in accordance with approval shop drawings, and accepted submittals. Size of Tunnel Excavation. Make the excavation of a minimum sufficient size to permit pipe installation by jacking with allowance for bentonite injection into the annular space. The maximum allowable overcut shall not be greater than (19 mm) larger in diameter than the outside diameter of the jacking pipe.

b. Provide a suitable jacking frame and thrust block to carry out the work. Use a thrust wall for pipe jacking that is properly designed and constructed. Position thrust wall normal to the proposed pipe alignment. Thrust wall shall be designed to support the maximum obtainable jacking pressure developed by the main jacking system. Special care shall be taken when setting the pipe glide rails or the jacking frame in the jacking shaft to ensure correctness of the alignment, grade, and stability. If a concrete thrust wall or treated soil zone is used, concrete or other materials shall have attained the required strength before jacking begins.

c. Prior to starting auger borings operations, the track system shall be placed on correct grade and alignment and Contractor shall verify that they are properly supported.

d. Special care shall be taken when setting the pipe guide prior to starting work in the jacking pit to ensure correctness of the alignment, grade and stability. Survey the location and orientation of the pipe guide rails to ensure they are on the proper line and grade and verify that they are properly supported.

e. Casing sections shall be handled and transported from the storage area to the jacking pit properly in accordance with the manufacturer's recommendation to avoid damage. Set the casing sections properly braced and supported by guide rails. Join the two casing sections together following the welding procedures indicated in approved submittals.

f. The axial forces from the thrust jacks shall be distributed to the pipe uniformly through a properly designed thrust ring and cushion materials, as recommended by the pipe manufacturer, to prevent damage to the ends of the pipe. Jacking forces shall be applied uniformly to the pipe wall. The jacking system shall be capable of continuously monitoring the jacking pressure and advance rate.

g. Casing pipes shall be jacked into position to allow the installation of the carrier pipe in accordance with the design line and

grade without damaging the pipe. In the event a section of the casing pipe is damaged during the jacking operation, the pipe shall be jacked through to the receiving pit and removed. Other methods of repairing the damaged pipe may be used, subject to the approval by the Contracting Officer

h. Water present in the casing shall be removed prior to grouting. The Contractor shall be responsible for specifying a grout with strength adequate to support the pipe for all anticipated loadings. Additionally, the grout must have a low enough viscosity that it will flow from one end of the casing to the other. Holes shall be drilled prior to inserting the drain pipe into the casing. The actual spacing of holes needs to be based on how far the grout can flow without exceeding the allowable collapse pressure of the pipe.

i. The slope (grade) of the casing shall be controlled so that only minor adjustments will be required to bring the drain pipe to grade. Differential settlement may occur between the pipe and casing unless the casing is properly embedded.

j. Grouting shall proceed from upstream end of the line to the downstream end. Each succeeding grout hole shall be used as an observation port. Grout injection shall not be moved to the next hole unless the grout is observed in that hole and can be seen to completely encase the pipe. Injecting grout into a hole where grout is not seen will probably result in trapped air in the annular space and a high potential for the pipe to float, over deflect, or buckle. In the event that grout does not reach the next injection point, additional holes need to be drilled from the surface.

k. Provide a lubrication system, and inject lubricants through injection ports in the casing as necessary, to minimize friction. Lubricants shall be injected continuously as the casing is advanced. The volume injected shall not be less than that required to fill the annular void space outside the pipe. Inject greater volumes as required to minimize jacking forces.

l. The auger boring shall be operated so as to prevent both surface heave and loss of ground during auger boring. Restrict the excavation of the materials to only those materials that are physically displaced by the shield itself in order to prevent loss of ground and settlement or possible damage to overlying structures. Control the advance rate and monitor the volume of material excavated and adjusted advance rate, as required, to avoid loss of ground, overexcavation, and surface heave.

m. The boring machine shall be steered to maintain line and grade within the tolerance specified.

n. The storm drain pipe (carrier pipe) shall be properly supported and secured inside the jacked casing pipe to design line and grade of the drain pipe within specified tolerances, prior to grouting of the annulus between the casing and the drain pipe. Remove all loose soil from casing. Provide timber skids and blocking or other approved devices as required to prevent flotation, movement, or damage to the pipe/during installation and grout backfill placement. The annulus shall be completely filled with a cement grout having a 28-day unconfined compressive strength of at least 100 psi. If the grouting work damages drain pipe or alter the line and grade of the drain beyond the specified tolerance limits, the drain pipe shall be replaced at no

additional cost to Government. The carrier pipe line and grade should be verified following grouting operations.

3.3.2 Safety

a. All work shall conform to the requirements of OSHA. Perform all work in accordance with current applicable regulations of Federal, State, and local agencies. In the event of conflict, comply with the most stringent applicable requirement.

b. No gasoline powered equipment shall be permitted in jacking and receiving pits. Diesel, electrical, hydraulic, and air powered equipment is acceptable, subject to applicable City, State, and Federal regulations.

3.3.3 Equipment

Furnish all necessary equipment, power, water, and utilities for auger boring, pipe lubricant mixing and pumping, removal and disposal of spoil, and other associated work required for the Contractor's methods of construction.

3.3.4 Thrust Block

A thrust block is required to transfer jacking loads to the soils behind the jacking pit. The thrust block shall be properly designed and constructed and shall be perpendicular to the proposed pipe alignment. The thrust block shall be designed to support the maximum obtainable jacking pressure developed by the main jacks or the auger boring machine.

3.3.5 Launching Seals

Provide launching seals to prevent loss of ground and loss lubricants at jacking pits.

3.3.6 Recovery Shafts

The Contractor shall construct recovery shafts, in accordance with approved submittals, if obstructions such as high strength and large boulders, debris, existing utilities, old foundations, or other obstructions are encountered which stop the auger boring machine from advancing. The shafts shall be properly supported with suitable shoring provisions to minimize loss of ground and ground movements, which could damage adjacent utilities and streets. Provide traffic control in accordance with the AASHTO Manual Uniform Traffic Control Devices, as approved by the Contracting Officer. Proceed with the construction of recovery shafts as required to remove obstructions and minimize delays in the work.

3.3.7 Temporary Ventilation

Furnish and operate when personnel are underground, a temporary ventilation system and air monitoring system conforming to the requirements of OSHA. Provided a sufficient supply of fresh air and maintain an atmosphere free of flammable gasses in all underground work areas.

3.3.8 Spoil Transport and Disposal

Use a slurry spoil transportation system for all tunneling. Control slurry pressure and avoid excessive pumping pressures to prevent the discharge of

slurry at the ground surface. Clean up any slurry discharges immediately. Wash paved areas with water to avoid the tracking of slurry away from the discharge area.

Mechanical separation equipment shall be provided to remove the excavated soil from the slurry for disposal. Use shakers, vibrating screens, desanders, hydrocyclones, and centrifuges as required for effective spoil removal. Separation plant shall comply with the noise control requirements of SECTION 01430 ENVIRONMENTAL PROTECTION.

Transport and dispose of all excavated materials away from the construction sites. No stockpiling shall be permitted at the jacking pit sites. Slurry shall be pumped into tanker trucks and disposed of at acceptable facilities in accordance with current federal and state regulations for disposal of these materials.

3.3.9 Remote Control System

Provide a TBM which includes a remote control system with the following features:

a. Allows for operation of the system without the need for personnel to enter the tunnel. The TBM display equipment shall continuously show and automatically record the position of the shield with respect to the project design line and grade. Records shall be kept for roll, pitch, altitude, rate of advance, installed length, cutter head torque, jacking loads, slurry pressure, slurry flow, and slurry.

b. Integrates the system of excavation and removal of spoil and its simultaneous replacement by pipe. As each pipe section is jacked forward, the control system shall synchronize all of the operational functions of the system.

3.3.10 Shafts

Shaft construction with or without permanent structures in them, shall be constructed in accordance with Section 02201 SHAFT CONSTRUCTION. The shaft locations shall be indicated on the Tunneling Work Plan to be submitted by the Contractor. The Contractor shall select his work method, and work with the Contracting Officer to best suit his equipment and pipe material keeping the project parameters in mind.

3.3.11 Grouting

Completely fill voids outside the limits of the excavation created by cave-ins or collapse of earth cover over the excavation. The annular space created by the overcut of the TBM in excess of (19 mm) shall be filled with an approved material such as pressure-injected sand cement grout.

Furnish and operate suitable equipment for any required grouting operations depending on the condition of the application.

Take care in grouting operations to prevent damage to adjacent utilities or other properties. Grout at a pressure that will not distort or imperil any portion of the work or existing installation or structures.

3.4 CONTROL OF LINE AND GRADE

3.4.1 Construction and Control

The Contractor shall establish the baseline and benchmarks and accurately indicate them on the drawings. Contractor shall verify the accuracy of these baseline and benchmarks at the beginning of the work and report any errors or discrepancies to the Contracting Officer.

The Contractor shall use the baseline and benchmarks established to furnish and maintain reference control lines and grades for the drain pipe construction. Use these lines and grades to establish the exact location of the tunnel excavation, casing pipe, drain pipe and structures. A surveyor licensed in the State of Hawaii shall perform the surveys.

The Contractor shall establish and be responsible for accuracy of control for the construction of the entire project, including access shaft locations, structures, excavation, pipe alignment and grade.

Establish control points sufficiently far from the tunnel operation so as not to be affected by ground movement.

Record initial setup.

When the excavation if off line or grade, make the necessary corrections to avoid back-flow of gravity drainlines. Return to the design alignment and grade at a rate of not more than 25 mm per 7.5 m (1 inch per 25 feet).

For auger boring methods, control line and grade of the casing in accordance with the following requirements:

Control the application of the jacking pressure and excavation of materials ahead of the casing as it advances to prevent the casing from becoming earthbound or from deviating from the required line and grade. Check line-and-grade using surveying methods from inside the casing, or other methods approved by the Contracting Officer every 3m (10 feet) to every casing section whichever is less, unless permitted otherwise by the Contracting Officer.

Maintain daily surveying records of alignment and grade. Submit three copies of these records to Contracting Officer within 24 hours of the operation. The Contractor, however, remains fully responsible for the accuracy of this work and the correction of it, as required.

Check the primary control for the TBM against an aboveground undisturbed reference at least once each week and once for each (30 m) of tunnel constructed, or more often as needed or directed by the Contracting Officer.

Perform a verification survey of the installed drain pipe from shaft to shaft after removal of the TBM. Document measured conformance to design line and grade of the pipe casing together with locations and deviation (distance and direction) of any out-of-tolerance locations.

Acceptance criteria for the drain pipe shall be in accordance with the following tolerances.

Tolerances. The storm drain pipe shall be installed, including grouting of the annulus between the steel casing and the drain pipe, to meet the following tolerances along the entire length within the jacked steel casing:

a. Line Tolerance: $\pm$ 50 mm (2 inches) from design horizontal alignment.

b. Grade Tolerance: ± 25 mm (1 inch) from design grade.

c. Water shall be free draining between any two points at the pipe invert. No reverse grades will be allowed.

The steel casing shall be installed to meet the following tolerances:

a. Line tolerance: ± 100 mm (4 inches) from design horizontal alignment.

b. Grade Tolerance: ± 75 mm (3 inches) from design grade.

If allowable tolerances are exceeded; the Contractor shall bear full responsibility and expense for correction (redesign, reconstruction, damages to existing structures, utilities, trees, etc.).

If redesign is required, the Contractor shall obtain the services of a Professional Engineer registered in the State of Hawaii for the redesign. The installed pipe must be capable of meeting the design flow and velocities for a full pipe condition. Plans showing the changes shall be submitted to the Contracting Officer for review.

Drain pipe installed outside the tolerances established above shall be removed and reconstructed within tolerance, as directed by the Contracting Office, at no additional cost to the Government.

3.4.2 Leakage Testing

Perform testing of the completed drainline in accordance with Section 02531 SANITARY SEWERS of the Standard Specification.

3.4.3 Surface Settlement

The Contractor shall be responsible for damage due to settlement from any construction-induced activities.

Take precautions to avoid damage or settlement to the buildings, structures, roads, and utilities in close proximity to the work. Use of construction methods and equipment to minimize loss of earth at the excavation face and settlement or heave of earth around the drain pipe.

The Contractor's detailed plan for monitoring ground surface movement shall be implemented for detecting earth movement.

In the event any movement of ground is detected, the Contracting Officer shall order the work stopped and secured. Before proceeding, the contractor shall correct any problems causing or resulting from such movement.

The Contractor shall be aware that if settlement of the ground surface should occur during construction which will affect the accuracy of the temporary benchmarks established by the Contractor, it shall be the Contractor's responsibility to detect and report such movement. Advise the Contracting Officer of any settlement affecting the permanent monuments or benchmarks. Upon completion, the field books pertaining to monitoring of the permanent monuments or benchmarks shall be submitted to the Contracting Officer.

3.4.4 Monitoring

Surveying for monitoring surface settlement points shall be performed by a Land Surveyor licensed in the State of Hawaii with previous experience surveying for the detection of structural deformations and surface movements.

Surface settlement points shall be established by an inscribed marking or approved surveyor's nail driven flush with the surface in asphalt or concrete paved areas. In landscaped areas, surface settlement points shall be established by driving a timber stake flush with the ground. Each control point shall have a tag or marking indicating the station and offset from centerline of the pipeline.

Use monuments sufficiently removed from the construction operations to avoid errors in reading due to ground settlement.

3.4.5 Surface Settlement Points

A minimum of two (2) settlement survey points shall be installed at each jacking, receiving and intermediate pit location. The settlement points shall be located within (1.52 m) of both pit edges parallel to the tunneling pipe.

A three-point array of surface settlement points shall be established every 100 feet along the sewer alignment. Relocate settlement points that cannot be safely surveyed as required by the Contracting Officer.

Locate settlement points on all structures within a distance equal to one and one-half times the depth of the shaft or pipe centerline, or as directed by the Contracting Officer.

Install settlement points and make initial surveying measurements prior to performing any shaft excavation and prior to any pipe installation. Thereafter, survey the elevation of the settlement points daily while tunneling operations are within (30.48 m) of the settlement point, and at least once per week until all measurable subsidence stops. For shaft excavation, survey the elevation of settlement points weekly until the excavation is backfilled.

Reading frequency shall be increased as required by the Contracting Officer when construction is approaching or near critical structures (structures, bridge piers, pipelines, etc., partially or entirely located within a distance equal to one and one-half times the depth of tunnel but at least (7.6 m) in plan from the tunnel centerline).

Record the horizontal coordinates and elevations (with an accuracy of (3 mm)) for each survey point location. Reference survey points so that they may be accurately re-established if lost or destroyed.

Measure and maintain records of deformation as defined by the Contractor's monitoring plan.

Immediately report to the Contracting Officer any movement, cracking, or settlement which is detected and take immediate remedial action. The Contractor shall be fully responsible for any such damage to adjacent structures.

At the end of construction after the drain pipe is installed, and all tunnel shafts backfilled, make a final survey of all control points

established for instrumentation and observation. The final readings shall be submitted to the Contracting Office. Make a visual inspection of all structures adjacent to the sewer pipe and report to the Contracting Officer the condition of the structures, any damage incurred during construction, and corrective action taken. End of construction survey shall take place 90 days after construction is completed to allow time to observe delayed ground response.

All surface settlement points shall be removed during the clean-up and site restoration work, as directed by the Contracting Officer.

3.4.6 Pre-and Post Construction Survey

3.4.6.1 Pre-Construction Survey

The Contractor shall perform a preconstruction survey of all facilities which lie within 30m (100 feet) on either side of the proposed drainline alignment. The preconstruction survey shall include the following:

a. A walk through visual survey by the Contractor's superintendent and the Contracting Officers representative to observe all visible structures to provide an indication of any existing cracking or distress. The Contractor and Contracting Officer Representative shall record notes in a field notebook.

b. A video tape of the structures showing their general appearance and any special areas where cracks of other evidence of existing distress.

c. A still photographic log of any areas where existing distress or cracking is noted. The photographs shall be complied into a notebook with the date, location, scale, photographers initials, and comment provided for each photograph.

d. Copies of the field notebooks, video tape, and still photographs shall be provided to the Contracting Officer within 2 weeks of conducting the preconstruction survey.

3.4.6.2 Post-Construction Survey

At the completion of the pipeline construction by trenchless method, a final walkthrough with the Contractor's superintendent and the Contracting Officers representative to verify any visual changes which have occurred to the structures, pavements, etc. during the period the work was conducted. And supporting photographs of measurements shall be recorded.

3.4.6.3 Final Report

A final report summarizing the results of the pre-and post-construction surveys shall be prepared by the Contractor. Superintendent and submitted to the Contracting Officer.

3.4.7 Cleanup and Restoration

Restoration shall follow construction as the work progresses and shall be completed as soon as possible, in accordance with the Section 02201 SHAFT CONSTRUCTION of the Specifications. Restore and repair any damage resulting from surfaces settlement caused by shaft construction or trenchless pipe installation. Any property damaged or destroyed shall be restored to a condition equal to or better than existing prior to

construction. Restoration shall be completed no later than thirty (30) days after the pipe is in place. Final restoration that cannot be performed within the thirty (30) day period due to adverse weather conditions, may, upon written request that includes a proposed procedure and time schedule, be performed as approved the Contracting Officer.

3.4.8 Disposal of Excess Material

Care shall be used in the transportation of the excavated material. The Contractor shall remove the excavated material from the job site and dispose of properly in accordance with the applicable Federal or State regulations.

3.4.9 Construction Area Appearance

The Contractor shall throughout the duration of the project, keep all street, sidewalks and driveways, in the vicinity of the drain pipe installation free from all debris produced from the project. The Contractor shall keep the project and surrounding areas neat and free from dust nuisance. The Contracting Officer may require supplementary measures as necessary.

Upon completion of each phase of the project, the Contractor shall immediately remove all excess material and thoroughly clean the affected area.

Upon completion of the work, the Contractor shall remove all equipment, signs and unused materials provided for the work and shall restore the project area to a neat and clean condition and do all the other required cleaning as specified above.

Should the Contractor fail to comply with the above provisions, the Contracting Officer may and without notice, have the cleaning done and deduct the cost of such work from any moneys due the Contractor under this contract.

-- End of Section --

SECTION TABLE OF CONTENTS

DIVISION 04 - MASONRY

SECTION 04200

MASONRY

PART 1 GENERAL

1.1 REFERENCES
1.2 SUBMITTALS
1.3 SAMPLE MASONRY PANELS
1.3.1 Configuration
1.3.2 Composition
1.3.3 Construction Method
1.3.4 Usage
1.4 DELIVERY, HANDLING, AND STORAGE
1.4.1 Masonry Units
1.4.2 Reinforcement, Anchors, and Ties
1.4.3 Cementitious Materials, Sand and Aggregates

PART 2 PRODUCTS

2.1 GENERAL REQUIREMENTS
2.2 CONCRETE MASONRY UNITS (CMU)
2.2.1 Kinds and Shapes
2.2.1.1 Patterned, Decorative Screen Units
2.3 GLASS BLOCK UNITS AND ACCESSORIES
2.3.1 Interior Glass Block Units
2.3.2 Horizontal Joint Reinforcement
2.3.3 Strip Anchor
2.3.4 Wire-Type Anchor
2.3.5 Expansion Strip
2.3.6 Packing (Backer Rods)
2.4 Deleted
2.5 PRECAST CONCRETE ITEMS
2.5.1 Lintels
2.5.2 Sills and Copings
2.5.3 Splash Blocks
2.6 MORTAR
2.7 GROUT
2.7.1 Grout Barriers
2.8 ANCHORS, TIES, AND BAR POSITIONERS
2.8.1 Wire Mesh Ties
2.8.2 Wall Ties
2.8.3 Dovetail Anchors
2.8.4 Bar Positioners
2.9 JOINT REINFORCEMENT
2.10 REINFORCING STEEL BARS AND RODS
2.11 CONTROL JOINT KEYS
2.12 EXPANSION-JOINT MATERIALS

PART 3 EXECUTION

3.1 ENVIRONMENTAL REQUIREMENTS
3.1.1 Hot Weather Installation
3.2 LAYING MASONRY UNITS
3.2.1 Surface Preparation
3.2.2 Forms and Shores
3.2.3 Concrete Masonry Units
3.2.4 Rack Back Mortar Joints
3.2.5 Hollow Units
3.2.6 Tolerances
3.2.7 Cutting and Fitting
3.2.8 Jointing
3.2.8.1 Flush Joints
3.2.8.2 Tooled Joints
3.2.8.3 Door and Window Frame Joints
3.2.9 Joint Widths
3.2.9.1 Concrete Masonry Units
3.2.10 Embedded Items
3.2.11 Unfinished Work
3.2.12 Masonry Wall Intersections
3.2.13 Partitions
3.3 MORTAR
3.4 REINFORCING STEEL
3.4.1 Positioning Bars
3.4.2 Splices
3.5 JOINT REINFORCEMENT
3.6 PLACING GROUT
3.6.1 Vertical Grout Barriers for Fully Grouted Walls
3.6.2 Horizontal Grout Barriers
3.6.3 Grout Holes and Cleanouts
3.6.3.1 Grout Holes
3.6.4 Grouting Equipment
3.6.4.1 Grout Pumps
3.6.4.2 Vibrators
3.6.5 Grout Placement
3.6.5.1 Low-Lift Method
3.7 BOND BEAMS
3.8 CONTROL JOINTS
3.9 LINTELS
3.9.1 Masonry Lintels
3.9.2 Precast Concrete and Steel Lintels
3.10 SILLS AND COPINGS
3.11 ANCHORAGE TO CONCRETE
3.12 SPLASH BLOCKS
3.13 POINTING AND CLEANING
3.13.1 Concrete Masonry Unit Surfaces
3.14 BEARING PLATES
3.15 PROTECTION
3.16 TEST REPORTS
3.16.1 Field Testing of Mortar
3.16.2 Field Testing of Grout
3.16.3 Prism Tests

-- End of Section Table of Contents --

SECTION 04200

MASONRY

PART 1 GENERAL

1.1 REFERENCES

The publications listed below form a part of this specification to the extent referenced. The publications are referred to in the text by basic designation only.

ACI INTERNATIONAL (ACI)

ACI SP-66	(1994) ACI Detailing Manual

AMERICAN SOCIETY FOR TESTING AND MATERIALS (ASTM)

ASTM A 82	(1995a) Steel Wire, Plain, for Concrete Reinforcement
ASTM A 153	(1996) Zinc Coating (Hot-Dip) on Iron and Steel Hardware
ASTM A 615/A 615M	(1996a) Deformed and Plain Billet-Steel Bars for Concrete Reinforcement
ASTM C 90	(1996a) Loadbearing Concrete Masonry Units
ASTM C 270	(1997) Mortar for Unit Masonry
ASTM C 476	(1995) Grout for Masonry
ASTM C 780	(1996) Preconstruction and Construction Evaluation of Mortars for Plain and Reinforced Unit Masonry
ASTM C 1019	(1989a; R 1993) Sampling and Testing Grout
ASTM C 1072	(1994) Measurement of Masonry Flexural Bond Strength
ASTM D 2000	(1996) Rubber Products in Automotive Applications
ASTM D 2240	(1997) Rubber Property - Durometer Hardness
ASTM D 2287	(1996) Nonrigid Vinyl Chloride Polymer and Copolymer Molding and Extrusion Compounds
ASTM E 447	(1992b) Compressive Strength of Masonry Prisms

1.2 SUBMITTALS

Government approval is required for submittals with a "GA" designation; submittals having an "FIO" designation are for information only. The following shall be submitted in accordance with Section 01330 SUBMITTAL PROCEDURES:

SD-01 Data

Concrete Masonry Units; FIO.

Manufacturer's descriptive data.

SD-04 Drawings

Masonry Work; GA.

Drawings including plans, elevations, and details of wall reinforcement; details of reinforcing bars at corners and wall intersections; offsets; tops, bottoms, and ends of walls; control and expansion joints; and wall openings. Bar splice locations shall be shown. Bent bars shall be identified on a bending diagram and shall be referenced and located on the drawings. Wall dimensions, bar clearances, and wall openings greater than one masonry unit in area shall be shown. No approval will be given to the shop drawings until the Contractor certifies that all openings, including those for mechanical and electrical service, are shown. If, during construction, additional masonry openings are required, the approved shop drawings shall be resubmitted with the additional openings shown along with the proposed changes. Location of these additional openings shall be clearly highlighted. The minimum scale for wall elevations shall be 1 to 50. Reinforcement bending details shall conform to the requirements of ACI SP-66.

SD-09 Reports

Efflorescence Test; FIO. Field Testing of Mortar; FIO. Field Testing of Grout; FIO. Prism tests; FIO.

Test reports from an approved independent laboratory. Test reports on a previously tested material shall be certified as the same as that proposed for use in this project.

SD-13 Certificates

Concrete Masonry Units (CMU); FIO. Control Joint Keys; FIO. Anchors, Ties, and Bar Positioners; FIO. Expansion-Joint Materials; FIO. Joint Reinforcement; FIO. Reinforcing Steel Bars and Rods; FIO. Precast Concrete Items; FIO. Mortar Admixtures; FIO. Grout Admixtures; FIO.

Certificates of compliance stating that the materials meet the specified requirements.

SD-14 Samples

Concrete Masonry Units (CMU); FIO.

Color samples of three stretcher units and one unit for each type of special shape.

Anchors, Ties, and Bar Positioners; FIO.

Two of each type used.

Expansion-Joint Material; FIO.

One piece of each type used.

Joint Reinforcement; FIO.

One piece of each type used, including corner and wall intersection pieces, showing at least two cross wires.

1.3 SAMPLE MASONRY PANELS

After material samples are approved and prior to starting masonry work, sample masonry panels shall be constructed for each type and color of masonry required. At least 48 hours prior to constructing the sample panel or panels, the Contractor shall submit written notification to the Contracting Officer's Representative. Sample panels shall not be built in, or as part of the structure, but shall be located where directed.

1.3.1 Configuration

Panels shall be L-shaped or otherwise configured to represent all of the wall elements. Panels shall be of the size necessary to demonstrate the acceptable level of workmanship for each type of masonry represented on the project. The minimum size of a straight panel or a leg of an L-shaped panel shall be 2.5 m by 1.2 m.

1.3.2 Composition

Panels shall show full color range, texture, and bond pattern of the masonry work. The Contractor's method for mortar joint tooling; grouting of reinforced vertical cores, collar joints, bond beams, and lintels; positioning, securing, and lapping of reinforcing steel; positioning and lapping of joint reinforcement (including prefabricated corners); and cleaning of masonry work shall be demonstrated during the construction of the panels. Installation or application procedures for anchors, wall ties, CMU control joints, brick expansion joints, insulation, flashing, brick soldier, row lock courses and weep holes shall be shown in the sample panels. The panels shall contain a masonry bonded corner that includes a bond beam corner. Panels shall show installation of electrical boxes and conduit. Panels that represent reinforced masonry shall contain a 600 mm by 600 mm opening placed at least 600 mm above the panel base and 600 mm away from all free edges, corners, and control joints. Required reinforcing shall be provided around this opening as well as at wall corners and control joints.

1.3.3 Construction Method

Where masonry is to be grouted, the Contractor shall demonstrate and receive approval on the method that will be used to bring up the masonry wythes; support the reinforcing bars; and grout cells, bond beams, lintels, and collar joints using the requirements specified herein. If sealer is specified to be applied to the masonry units, sealer shall be applied to the sample panels. Panels shall be built on a properly designed concrete foundation.

1.3.4 Usage

The completed panels shall be used as the standard of workmanship for the type of masonry represented. Masonry work shall not commence until the sample panel for that type of masonry construction has been completed and approved. Panels shall be protected from the weather and construction operations until the masonry work has been completed and approved. After completion of the work, the sample panels, including all foundation concrete, shall become the property of the Contractor and shall be removed from the construction site.

1.4 DELIVERY, HANDLING, AND STORAGE

Materials shall be delivered, handled, stored, and protected to avoid chipping, breakage, and contact with soil or contaminating material.

1.4.1 Masonry Units

Concrete masonry units shall be covered or protected from inclement weather and shall conform to the moisture content as specified in ASTM C 90when delivered to the jobsite.

1.4.2 Reinforcement, Anchors, and Ties

Steel reinforcing bars, coated anchors, ties, and joint reinforcement shall be stored above the ground. Steel reinforcing bars and uncoated ties shall be free of loose mill scale and rust.

1.4.3 Cementitious Materials, Sand and Aggregates

Cementitious and other packaged materials shall be delivered in unopened containers, plainly marked and labeled with manufacturers' names and brands. Cementitious material shall be stored in dry, weathertight enclosures or be completely covered. Cement shall be handled in a manner that will prevent the inclusion of foreign materials and damage by water or dampness. Sand and aggregates shall be stored in a manner to prevent contamination or segregation.

PART 2 PRODUCTS

2.1 GENERAL REQUIREMENTS

The source of materials which will affect the appearance of the finished work shall not be changed after the work has started except with Contracting Officer's approval. The Contractor has the option to use either hard metric or substitute inch-pound (soft-metric) CMU products. If the Contractor decides to substitute inch-pound CMU products, the following additional requirements shall be met:

a. The metric dimensions indicated on the drawings shall not be altered to accommodate inch-pound CMU products either horizontally or vertically. The 100 mm building module shall be maintained, except for the CMU products themselves.

b. Mortar joint widths shall be maintained as specified.

c. Rebars shall not be cut, bent or eliminated to fit into the inch-pound CMU products module.

d. Brick and inch-pound CMU products shall not be reduced in size

by more than one-third (1/3) in height and one-half (1/2) in length. Cut CMU products shall not be located at ends of walls, corners, and other openings.

e. Cut, exposed brick and CMU products shall be held to a minimum and located where they would have the least impact on the architectural aesthetic goals of the facility.

f. Other building components, built into the CMU products, such as window frames, door frames, louvers, grilles, fire dampers, etc., that are required to be metric, shall remain metric.

g. Additional metric guidance shall conform to Section 01415 METRIC MEASUREMENTS.

2.2 CONCRETE MASONRY UNITS (CMU)

Concrete masonry units shall conform to ASTM C 90, Type II normal weight, except oven-dry weight shall be no less than 119 pounds per cubic foot for hollow load bearing units. Cement shall have low alkali content and be of one brand. The color and texture of the concrete masonry units shall be specified by the Contracting Officer. The finished surfaces that will be exposed in place shall conform to an approved sample consisting of not less than four units, representing the range of texture and color permitted.

2.2.1 Kinds and Shapes

Units shall be modular in size and shall include closer, jamb, header, lintel, and bond beam units and special shapes and sizes to complete the work as indicated. In exposed interior masonry surfaces, units having a bullnose shall be used for vertical external corners except at door, window, and louver jambs. Radius of the bullnose shall be 25 mm (1 inch). Units used in exposed masonry surfaces in any one building shall have a uniform fine to medium texture and a uniform color.

2.2.1.1 Patterned, Decorative Screen Units

Patterned, decorative screen units shall conform to the applicable requirements of ASTM C 90. Units shall have uniform through-the-wall pattern, color, and texture.

2.3 GLASS BLOCK UNITS AND ACCESSORIES

Glass block units shall be size, type, pattern, and style specified. Units shall be made of clear colorless glass. Pattern shall be clear with it distinctive wavy undulations, maximum light transmissions, subtle distortion accessories shall be the products manufactured by or as recommended by the glass block manufacturer.

2.3.1 Interior Glass Block Units

Units shall be Decora pattern and shall be 197 mm (7-3/4 inches) by 197 mm (7-3/4 inches) by 98 mm (3-7/8 inches). Accessory includes 45 degrees corner, Decora pattern 197 mm (7-3/4 inches) High x 98 mm (3-7/8 inches) thickness.

2.3.2 Horizontal Joint Reinforcement

Joint reinforcement shall be factory fabricated from steel wire, and shall

conform to ASTM A 82. Wire shall be zinc coated after fabrication by the hot-dip process conforming to ASTM A 153, Class B-2. Reinforcement shall consist of two or more parallel longitudinal wires not lighter than 9 gauge weld connected with cross wires not lighter than 14 gauge at not greater than 200 mm (8 inches) on center. At least one longitudinal wire for each face of glass block shall be provided. Out-to-out dimension of the longitudinal wires shall be 40 mm (1-1/2 inches) less than the actual width of the block. Joint reinforcement in flat sections not less than 2.40 m (8 feet) long shall be provided, except that corner reinforcements and other special shapes may be shorter.

2.3.3 Strip Anchor

Perforated steel strip shall be not less than 20 gauge, minimum of 45 mm (1-3/4 inches) wide by 600 mm long and galvanized after fabrication.

2.3.4 Wire-Type Anchor

Steel wire shall be not less than 9 gauge of approved design suitable for use with the panel stiffener provided and galvanized after fabrication.

2.3.5 Expansion Strip

Dense fibrous glass batt or material shall be as recommended by the glass block manufacturer.

2.3.6 Packing (Backer Rods)

Polyethylene foam, neoprene, or filler shall be as recommended by the sealant manufacturer.

2.4 Deleted

Deleted

2.5 PRECAST CONCRETE ITEMS

Trim, lintels, copings, splashblocks and door sills shall be factory-made units from a plant regularly engaged in producing precast concrete units. Unless otherwise indicated, concrete shall be 28 MPa (4000 psi) minimum conforming to Section 03300 CAST-IN-PLACE STRUCTURAL CONCRETE using 13 mm (1/2 inch) to No. 4 nominal-size coarse aggregate, and minimum reinforcement shall be the reinforcement required for handling of the units. Clearance of 20 mm shall be maintained between reinforcement and faces of units. Unless precast-concrete items have been subjected during manufacture to saturated-steam pressure of at least 827 kPa (120 psi) for at least 5 hours, the items, after casting, shall be either damp-cured for 24 hours or steam-cured and shall then be aged under cover for 28 days or longer. Cast-concrete members weighing over 35 kg shall have built-in loops of galvanized wire or other approved provisions for lifting and anchoring. Units shall have beds and joints at right angles to the face, with sharp true arises and shall be cast with drip grooves on the underside where units overhang walls. Exposed-to-view surfaces shall be free of surface voids, spalls, cracks, and chipped or broken edges. Precast units exposed-to-view shall be of uniform appearance and color. Unless otherwise specified, units shall have a smooth dense finish. Prior to use, each item shall be wetted and inspected for crazing. Items showing evidence of dusting, spalling, crazing, or having surfaces treated with a protective coating will be rejected.

2.5.1 Lintels

Precast lintels, unless otherwise shown, shall be of a thickness equal to the wall and reinforced with two No. 4 bars for the full length. Top of lintels shall be labeled "TOP" or otherwise identified and each lintel shall be clearly marked to show location in the structure.

2.5.2 Sills and Copings

Sills and copings shall be cast with washes. Sills for windows having mullions shall be cast in sections with head joints at mullions and a 6 mm (1/4 inch) allowance for mortar joints. The ends of sills, except a 20 mm (3/4 inch) wide margin at exposed surfaces, shall be roughened for bond. Treads of door sills shall have rounded nosings.

2.5.3 Splash Blocks

Splash blocks shall be as detailed. Reinforcement shall be the manufacturer's standard.

2.6 MORTAR

Mortar shall be Type S in accordance with the proportion specification of ASTM C 270 except Type S cement-lime mortar proportions shall be 1 part cement, 1/2 part lime and 4-1/2 parts aggregate. Verification of masonry cement performance shall be based on ASTM C 780 and ASTM C 1072. Masonry cement shall not be used. Pointing mortar in showers and kitchens shall contain ammonium stearate, or aluminum tri-stearate, or calcium stearate in an amount equal to 3 percent by weight of cement used. Cement shall have a low alkali content and be of one brand. Aggregates shall be from one source.

2.7 GROUT

Grout shall conform to ASTM C 476. Cement used in grout shall have a low alkali content. Grout slump shall be between 200 and 250 mm. Grout shall be used subject to the limitations of Table III. Proportions shall not be changed and materials with different physical or chemical characteristics shall not be used in grout for the work unless additional evidence is furnished that the grout meets the specified requirements.

2.7.1 Grout Barriers

Grout barriers for vertical cores shall consist of fine mesh wire, fiberglass, or expanded metal.

2.8 ANCHORS, TIES, AND BAR POSITIONERS

Anchors and ties shall be fabricated without drips or crimps and shall be zinc-coated in accordance with ASTM A 153, Class B-2. Steel wire used for anchors and ties shall be fabricated from steel wire conforming to ASTM A 82. Anchors and ties shall be sized to provide a minimum of 16 mm mortar cover from either face.

2.8.1 Wire Mesh Ties

Wire mesh for tying 100 mm (4 inch) thick concrete masonry unit partitions to other intersecting masonry partitions shall be 13 mm (1/2 inch) mesh of

minimum 16 gauge steel wire. Minimum lengths shall be not less than 300 mm.

2.8.2 Wall Ties

Wall ties shall be rectangular-shaped or Z-shaped fabricated of 5 mm (3/16 inch) diameter zinc-coated steel wire. Rectangular wall ties shall be no less than 100 mm (4 inches) wide. Wall ties may also be of a continuous type conforming to paragraph JOINT REINFORCEMENT. Adjustable type wall ties, if approved for use, shall consist of two essentially U-shaped elements fabricated of 5 mm (3/16 inch) diameter zinc-coated steel wire. Adjustable ties shall be of the double pintle to eye type and shall allow a maximum of 13 mm (1/2 inch) eccentricity between each element of the tie. Play between pintle and eye opening shall be not more than 2 mm (1/16 inch). The pintle and eye elements shall be formed so that both can be in the same plane.

2.8.3 Dovetail Anchors

Dovetail anchors shall be triangular shaped, and attached to a 12 gauge or heavier steel dovetail section. These anchors shall be used for anchorage concrete masonry units to concrete columns, beams, or walls. Cells within vertical planes of these anchors shall be filled solid with grout for full height of walls or partitions, or solid units may be used. Dovetail slots are specified in Section 03300 CAST-IN-PLACE STRUCTURAL CONCRETE.

2.8.4 Bar Positioners

Bar positioners, used to prevent displacement of reinforcing bars during the course of construction, shall be factory fabricated from 9 gauge steel wire or equivalent, and coated with a hot-dip galvanized finish. Not more than one wire shall cross the cell.

2.9 JOINT REINFORCEMENT

Joint reinforcement shall be factory fabricated from steel wire conforming to ASTM A 82, welded construction. Tack welding will not be acceptable in reinforcement used for wall ties. Wire shall have zinc coating conforming to ASTM A 153, Class B-2. All wires shall be a minimum of 9 gauge. Reinforcement shall be ladder type design, having one longitudinal wire in the mortar bed of each face shell for hollow units and one wire for solid units. Joint reinforcement shall be placed a minimum of 16 mm cover from either face. The distance between crosswires shall not exceed 400 mm (16 inches). Joint reinforcement for straight runs shall be furnished in flat sections not less than 3 m (10 feet) long. Joint reinforcement shall be provided with factory formed corners and intersections. If approved for use, joint reinforcement may be furnished with adjustable wall tie features.

2.10 REINFORCING STEEL BARS AND RODS

Reinforcing steel bars and rods shall conform to ASTM A 615/A 615M, Grade 60.

2.11 CONTROL JOINT KEYS

Control joint keys shall be a factory fabricated solid section of natural or synthetic rubber (or combination thereof) conforming to ASTM D 2000or polyvinyl chloride conforming to ASTM D 2287. The material shall be resistant to oils and solvents. The control joint key shall be provided

with a solid shear section not less than 16 mm (5/8 inch) thick and 10 mm (3/8 inch) thick flanges, with a tolerance of plus or minus 2 mm (1/16 inch). The control joint key shall fit neatly, but without forcing, in masonry unit jamb sash grooves. The control joint key shall be flexible at a temperature of minus 34 degrees C (minus 30 degrees F) after five hours exposure, and shall have a durometer hardness of not less than 70 when tested in accordance with ASTM D 2240.

2.12 EXPANSION-JOINT MATERIALS

Backer rod and sealant shall be adequate to accommodate joint compression equal to 50 percent of the width of the joint. The backer rod shall be compressible rod stock of polyethylene foam, polyurethane foam, butyl rubber foam, or other flexible, nonabsorptive material as recommended by the sealant manufacturer. Sealant shall conform to Section 07900JOINT SEALING.

PART 3 EXECUTION

3.1 ENVIRONMENTAL REQUIREMENTS

3.1.1 Hot Weather Installation

The following precautions shall be taken if masonry is erected when the ambient air temperature is more than 37 degrees C in the shade and the relative humidity is less than 50 percent. All masonry materials shall be shaded from direct sunlight; mortar beds shall be spread no more than 1.2 m ahead of masonry; masonry units shall be set within one minute of spreading mortar; and after erection, masonry shall be protected from direct exposure to wind and sun for 48 hours.

3.2 LAYING MASONRY UNITS

Masonry units shall be laid in running bond pattern. Facing courses shall be level with back-up courses, unless the use of adjustable ties has been approved in which case the tolerances shall be plus or minus 13 mm. Each unit shall be adjusted to its final position while mortar is still soft and plastic. Units that have been disturbed after the mortar has stiffened shall be removed, cleaned, and relaid with fresh mortar. Air spaces, cavities, chases, expansion joints, and spaces to be grouted shall be kept free from mortar and other debris. Units used in exposed masonry surfaces shall be selected from those having the least amount of chipped edges or other imperfections detracting from the appearance of the finished work. Vertical joints shall be kept plumb. Units being laid and surfaces to receive units shall be free of water film. Solid units shall be laid in a nonfurrowed full bed of mortar. Units shall be shoved into place so that the vertical joints are tight. Mortar will be permitted to protrude up to 13 mm into the space or cells to be grouted. Means shall be provided to prevent mortar from dropping into the space below.

3.2.1 Surface Preparation

Surfaces upon which masonry is placed shall be cleaned of laitance, dust, dirt, oil, organic matter, or other foreign materials and shall be slightly roughened to provide a surface texture with a depth of at least 3 mm. Sandblasting shall be used, if necessary, to remove laitance from pores and to expose the aggregate.

3.2.2 Forms and Shores

Forms and shores shall be sufficiently rigid to prevent deflections which may result in cracking or other damage to supported masonry and sufficiently tight to prevent leakage of mortar and grout. Supporting forms and shores shall not be removed in less than 10 days.

3.2.3 Concrete Masonry Units

Units in piers, pilasters, columns, starting courses on footings, solid foundation walls, lintels, and beams, and where cells are to be filled with grout shall be full bedded in mortar under both face shells and webs. Other units shall be full bedded under both face shells. Head joints shall be filled solidly with mortar for a distance in from the face of the unit not less than the thickness of the face shell. Foundation walls below grade shall be grouted solid. Jamb units shall be of the shapes and sizes to conform with wall units. Solid units may be incorporated in the masonry work where necessary to fill out at corners, gable slopes, and elsewhere as approved. Double walls shall be stiffened at wall-mounted plumbing fixtures by use of strap anchors, two above each fixture and two below each fixture, located to avoid pipe runs, and extending from center to center of the double wall. Walls and partitions shall be adequately reinforced for support of wall-hung plumbing fixtures when chair carriers are not specified.

3.2.4 Rack Back Mortar Joints

Rack back mortar joints a minimum of 6 mm (1/4 inch) and tuckpoint with grout as indicated on ceramic glazed structural units.

3.2.5 Hollow Units

Hollow units shall be laid as specified for concrete masonry units.

3.2.6 Tolerances

Masonry shall be laid plumb, true to line, with courses level. Bond pattern shall be kept plumb throughout. Corners shall be square unless noted otherwise. Masonry shall be laid within the following tolerances (plus or minus unless otherwise noted):

TABLE II

TOLERANCES

Variation from the plumb in the lines and surfaces of columns, walls and arises	
In adjacent masonry units	3 mm
In 3 m	6 mm
In 6 m	10 mm
In 12 m or more	13 mm
Variations from the plumb for external corners, expansion joints, and other conspicuous lines	
In 6 m	6 mm
In 12 m or more	13 mm
Variations from the level for exposed lintels, sills, parapets, horizontal grooves, and other conspicuous lines	
In 6 m	6 mm
In 12 m or more	13 mm
Variation from level for bed joints and top surfaces of bearing walls	
In 3 m	6 mm
In 12 m or more	13 mm
Variations from horizontal lines	
In 3 m	6 mm
In 6 m	10 mm
In 12 m or more	13 mm
Variations in cross sectional dimensions of columns and in thickness of walls	
Minus	6 mm
Plus	13 mm

3.2.7 Cutting and Fitting

Full units of the proper size shall be used wherever possible, in lieu of cut units. Cutting and fitting, including that required to accommodate the work of others, shall be done by masonry mechanics using power masonry saws. Concrete masonry units may be wet or dry cut. Wet cut units, before being placed in the work, shall be dried to the same surface-dry appearance as uncut units being laid in the wall. Cut edges shall be clean, true and

sharp. Openings in the masonry shall be made carefully so that wall plates, cover plates or escutcheons required by the installation will completely conceal the openings and will have bottoms parallel with the masonry bed joints. Reinforced masonry lintels shall be provided above openings over 300 mm wide for pipes, ducts, cable trays, and other wall penetrations, unless steel sleeves are used.

3.2.8 Jointing

Joints shall be tooled when the mortar is thumbprint hard. Horizontal joints shall be tooled last. Joints shall be brushed to remove all loose and excess mortar. Mortar joints shall be finished as follows:

3.2.8.1 Flush Joints

Joints in concealed masonry surfaces and joints at electrical outlet boxes in wet areas shall be flush cut. Flush cut joints shall be made by cutting off the mortar flush with the face of the wall. Joints in unparged masonry walls below grade shall be pointed tight. Flush joints for architectural units, such as fluted units, shall completely fill both the head and bed joints.

3.2.8.2 Tooled Joints

Joints in exposed exterior and interior masonry surfaces shall be tooled slightly concave. Joints shall be tooled with a jointer slightly larger than the joint width so that complete contact is made along the edges of the unit. Tooling shall be performed so that the mortar is compressed and the joint surface is sealed. Jointer of sufficient length shall be used to obtain a straight and true mortar joint.

3.2.8.3 Door and Window Frame Joints

On the exposed interior side of exterior frames, joints between frames and abutting masonry walls shall be raked to a depth of 10 mm. On the exterior side of exterior frames, joints between frames and abutting masonry walls shall be raked to a depth of 10 mm.

3.2.9 Joint Widths

Joint widths shall be as follows:

3.2.9.1 Concrete Masonry Units

Concrete masonry units shall have 10 mm (3/8 inch) joints, except for prefaced concrete masonry units.

3.2.10 Embedded Items

Spaces around built-in items shall be filled with mortar. Openings around flush-mount electrical outlet boxes in wet locations shall be pointed with mortar. Anchors, ties, wall plugs, accessories, flashing, pipe sleeves and other items required to be built-in shall be embedded as the masonry work progresses. Anchors, ties and joint reinforcement shall be fully embedded in the mortar. Cells receiving anchor bolts and cells of the first course below bearing plates shall be filled with grout.

3.2.11 Unfinished Work

Unfinished work shall be stepped back for joining with new work. Toothing may be resorted to only when specifically approved. Loose mortar shall be removed and the exposed joints shall be thoroughly cleaned before laying new work.

3.2.12 Masonry Wall Intersections

Each course shall be masonry bonded at corners and elsewhere as shown. Masonry walls shall be anchored or tied together at corners and intersections with bond beam reinforcement and prefabricated corner or tee pieces of joint reinforcement as shown.

3.2.13 Partitions

Partitions shall be continuous from floor to underside of floor or roof deck where shown. Openings in firewalls around joists or other structural members shall be filled as indicated or approved. Where suspended ceilings on both sides of partitions are indicated, the partitions other than those shown to be continuous may be stopped approximately 100 mm (4 inches) above the ceiling level. An isolation joint shall be placed in the intersection between partitions and structural or exterior walls as shown. Interior partitions having 100 mm (4 inch) nominal thick units shall be tied to intersecting partitions of 100 mm (4 inch) units, 125 mm into partitions of 150 mm (6 inch) units, and 175 into partitions of 200 mm (8 inch) or thicker units. Cells within vertical plane of ties shall be filled solid with grout for full height of partition or solid masonry units may be used. Interior partitions having masonry walls over 100 mm (4 inches) thick shall be tied together with joint reinforcement. Partitions containing joint reinforcement shall be provided with prefabricated pieces at corners and intersections or partitions.

3.3 MORTAR

Mortar shall be mixed in a mechanically operated mortar mixer for at least 3 minutes, but not more than 5 minutes. Measurement of ingredients for mortar shall be by volume. Ingredients not in containers, such as sand, shall be accurately measured by the use of measuring boxes. Water shall be mixed with the dry ingredients in sufficient amount to provide a workable mixture which will adhere to the vertical surfaces of masonry units. Mortar that has stiffened because of loss of water through evaporation shall be retempered by adding water to restore the proper consistency and workability. Mortar that has reached its initial set or that has not been used within 2-1/2 hours after mixing shall be discarded.

3.4 REINFORCING STEEL

Reinforcement shall be cleaned of loose, flaky rust, scale, grease, mortar, grout, or other coating which might destroy or reduce its bond prior to placing grout. Bars with kinks or bends not shown on the drawings shall not be used. Reinforcement shall be placed prior to grouting. Unless otherwise indicated, vertical wall reinforcement shall extend to within 50 mm of tops of walls.

3.4.1 Positioning Bars

Vertical bars shall be accurately placed within the cells at the positions indicated on the drawings. A minimum clearance of 13 mm shall be maintained between the bars and masonry units. Minimum clearance between parallel bars shall be one diameter of the reinforcement. Vertical

reinforcing may be held in place using bar positioners located near the ends of each bar and at intermediate intervals of not more than 192 diameters of the reinforcement. Column and pilaster ties shall be wired in position around the vertical steel. Ties shall be in contact with the vertical reinforcement and shall not be placed in horizontal bed joints.

3.4.2 Splices

Bars shall be lapped a minimum of 48 diameters of the reinforcement. Welded or mechanical connections shall develop at least 125 percent of the specified yield strength of the reinforcement.

3.5 JOINT REINFORCEMENT

Joint reinforcement shall be installed at 400 mm (16 inches) on center or as indicated. Reinforcement shall be lapped not less than 150 mm. Prefabricated sections shall be installed at corners and wall intersections. The longitudinal wires of joint reinforcement shall be placed to provide not less than 16 mm cover to either face of the unit.

3.6 PLACING GROUT

Cells containing reinforcing bars shall be filled with grout. Hollow masonry units in walls or partitions supporting plumbing, heating, or other mechanical fixtures, voids at door and window jambs, and other indicated spaces shall be filled solid with grout. Cells under lintel bearings on each side of openings shall be filled solid with grout for full height of openings. Walls below grade, lintels, and bond beams shall be filled solid with grout. Units other than open end units may require grouting each course to preclude voids in the units. Grout not in place within 1-1/2 hours after water is first added to the batch shall be discarded. Sufficient time shall be allowed between grout lifts to preclude displacement or cracking of face shells of masonry units. If blowouts, flowouts, misalignment, or cracking of face shells should occur during construction, the wall shall be torn down and rebuilt.

3.6.1 Vertical Grout Barriers for Fully Grouted Walls

Grout barriers shall be provided not more than 10 m apart, or as required, to limit the horizontal flow of grout for each pour.

3.6.2 Horizontal Grout Barriers

Grout barriers shall be embedded in mortar below cells of hollow units receiving grout.

3.6.3 Grout Holes and Cleanouts

3.6.3.1 Grout Holes

Grouting holes shall be provided in slabs, spandrel beams, and other in-place overhead construction. Holes shall be located over vertical reinforcing bars or as required to facilitate grout fill in bond beams. Additional openings spaced not more than 400 mm (16 inches) on centers shall be provided where grouting of all hollow unit masonry is indicated. Openings shall not be less than 100 mm in diameter or 75 by 100 mm in horizontal dimensions. Upon completion of grouting operations, grouting holes shall be plugged and finished to match surrounding surfaces.

3.6.4 Grouting Equipment

3.6.4.1 Grout Pumps

Pumping through aluminum tubes will not be permitted. Pumps shall be operated to produce a continuous stream of grout without air pockets, segregation, or contamination. Upon completion of each day's pumping, waste materials and debris shall be removed from the equipment, and disposed of outside the masonry.

3.6.4.2 Vibrators

Internal vibrators shall maintain a speed of not less than 5,000 impulses per minute when submerged in the grout. At least one spare vibrator shall be maintained at the site at all times. Vibrators shall be applied at uniformly spaced points not further apart than the visible effectiveness of the machine. Duration of vibration shall be limited to time necessary to produce satisfactory consolidation without causing segregation.

3.6.5 Grout Placement

Masonry shall be laid to the top of a pour before placing grout. Grout shall not be placed in two-wythe solid unit masonry cavity until mortar joints have set for at least 3 days during hot weather and 5 days during cold damp weather. Grout shall not be placed in hollow unit masonry until mortar joints have set for at least 24 hours. Grout shall be placed using a hand bucket, concrete hopper, or grout pump to completely fill the grout spaces without segregation of the aggregates. Vibrators shall not be inserted into lower pours that are in a semi-solidified state.

3.6.5.1 Low-Lift Method

Grout shall be placed at a rate that will not cause displacement of the masonry due to hydrostatic pressure of the grout. Mortar protruding more than 13 mm into the grout space shall be removed before beginning the grouting operation. Grout pours 300 mm or less in height shall be consolidated by mechanical vibration or by puddling. Grout pours over 300 mm in height shall be consolidated by mechanical vibration and reconsolidated by mechanical vibration after initial water loss and settlement has occurred. Vibrators shall not be inserted into lower pours that are in a semi-solidified state. Low-lift grout shall be used subject to the limitations of Table III.

TABLE III

POUR HEIGHT AND TYPE OF GROUT FOR VARIOUS GROUT SPACE DIMENSIONS

Maximum Grout Pour Height (m) (4)	Grout Type	Minimum Dimensions of the Total Clear Areas Within Grout Spaces and Cells (mm) (1,2) Hollow-unit Masonry
0.3	Fine	40 x 50
1.5	Fine	50 x 75
0.3	Coarse	40 x 75
1.5	Coarse	65 x 75

TABLE III

POUR HEIGHT AND TYPE OF GROUT FOR VARIOUS GROUT SPACE DIMENSIONS

Maximum Grout Pour Height (m) (4)	Grout Type	Minimum Dimensions of the Total Clear Areas Within Grout Spaces and Cells (mm) (1,2) Hollow-unit Masonry

Notes:

(1) The actual grout space or cell dimension must be larger than the sum of the following items:
a) The required minimum dimensions of total clear areas given in the table above;
b) The width of any mortar projections within the space;
c) The horizontal projections of the diameters of the horizontal reinforcing bars within a cross section of the grout space or cell.

(2) The minimum dimensions of the total clear areas shall be made up of one or more open areas, with at least one area being 20 mm or greater in width.

(3) For grouting spaces between masonry wythes.

(4) Where only cells of hollow masonry units containing reinforcement are grouted, the maximum height of the pour shall not exceed the distance between horizontal bond beams.

3.7 BOND BEAMS

Bond beams shall be filled with grout and reinforced as indicated on the drawings. Grout barriers shall be installed under bond beam units to retain the grout as required. Reinforcement shall be continuous, including around corners, except through control joints or expansion joints, unless otherwise indicated on the drawings. Where splices are required for continuity, reinforcement shall be lapped 48 bar diameters. A minimum clearance of 13 mm shall be maintained between reinforcement and interior faces of units.

3.8 CONTROL JOINTS

Control joints shall be provided as indicated and shall be constructed by using mortar to fill the head joint in accordance with the details shown on the drawings. The vertical mortar joint at control joint locations shall be continuous, including through all bond beams. This shall be accomplished by utilizing half blocks in alternating courses on each side of the joint. The control joint key shall be interrupted in courses containing continuous bond beam steel. In single wythe exterior masonry walls, the exterior control joints shall be raked to a depth of 20 mm; backer rod and sealant shall be installed in accordance with Section 07900 JOINT SEALING. Exposed interior control joints shall be raked to a depth of 6 mm . Concealed control joints shall be flush cut.

3.9 LINTELS

3.9.1 Masonry Lintels

Masonry lintels shall be constructed with lintel units filled solid with grout in all courses and reinforced with a minimum of two No. 4 bars in the bottom course unless otherwise indicated on the drawings. Lintel reinforcement shall extend beyond each side of masonry opening 40 bar diameters or 600 mm, whichever is greater. Reinforcing bars shall be supported in place prior to grouting and shall be located 15 mm above the bottom inside surface of the lintel unit.

3.9.2 Precast Concrete and Steel Lintels

Precast concrete and steel lintels shall be as shown on the drawings. Lintels shall be set in a full bed of mortar with faces plumb and true. Steel and precast lintels shall have a minimum bearing length of 200 mm (8 inches) unless otherwise indicated on the drawings.

3.10 SILLS AND COPINGS

Sills and copings shall be set in a full bed of mortar with faces plumb and true.

3.11 ANCHORAGE TO CONCRETE

Anchorage of masonry to the face of concrete columns, beams, or walls shall be with dovetail anchors spaced not over 400 mm (16 inches) on centers vertically and 600 mm (24 inches) on center horizontally.

3.12 SPLASH BLOCKS

Splash blocks shall be located as shown.

3.13 POINTING AND CLEANING

After mortar joints have attained their initial set, but prior to hardening, mortar and grout daubs or splashings shall be completely removed from masonry-unit surfaces that will be exposed or painted. Before completion of the work, defects in joints of masonry to be exposed or painted shall be raked out as necessary, filled with mortar, and tooled to match existing joints. Immediately after grout work is completed, scum and stains which have percolated through the masonry work shall be removed using a high pressure stream of water and a stiff bristled brush. Masonry surfaces shall not be cleaned, other than removing excess surface mortar, until mortar in joints has hardened. Masonry surfaces shall be left clean, free of mortar daubs, dirt, stain, and discoloration, including scum from cleaning operations, and with tight mortar joints throughout. Metal tools and metal brushes shall not be used for cleaning.

3.13.1 Concrete Masonry Unit Surfaces

Exposed concrete masonry unit and concrete brick surfaces shall be dry-brushed at the end of each day's work and after any required pointing, using stiff-fiber bristled brushes.

3.14 BEARING PLATES

Bearing plates for beams, joists, joist girders and similar structural members shall be set to the proper line and elevation with damp-pack bedding mortar, except where non-shrink grout is indicated. Bedding mortar

and non-shrink grout shall be as specified in Section 03300CAST-IN-PLACE STRUCTURAL CONCRETE.

3.15 PROTECTION

Facing materials shall be protected against staining. Top of walls shall be covered with nonstaining waterproof covering or membrane when work is not in progress. Covering of the top of the unfinished walls shall continue until the wall is waterproofed with a complete roof or parapet system. Covering shall extend a minimum of 600 mm down on each side of the wall and shall be held securely in place. Before starting or resuming, top surface of masonry in place shall be cleaned of loose mortar and foreign material.

3.16 TEST REPORTS

3.16.1 Field Testing of Mortar

At least three specimens of mortar shall be taken each day. A layer of mortar 13 to 16 mm thick shall be spread on the masonry units and allowed to stand for one minute. The specimens shall then be prepared and tested for compressive strength in accordance with ASTM C 780.

3.16.2 Field Testing of Grout

Field sampling and testing of grout shall be in accordance with the applicable provisions of ASTM C 1019. A minimum of three specimens of grout per day shall be sampled and tested. Each specimen shall have a minimum ultimate compressive strength of 13.8 MPa at 28 days.

3.16.3 Prism Tests

At least one prism test sample shall be made for each 465 square meters of wall but not less than three such samples shall be made for any building. Three prisms shall be used in each sample. Prisms shall be tested in accordance with ASTM E 447. Seven-day tests may be used provided the relationship between the 7- and 28-day strengths of the masonry is established by the tests of the materials used. Compressive strength shall not be less than 10.3 MPa (1500 psi) at 28 days. If the compressive strength of any prism falls below the specified value by more than 3.5 MPa, steps shall be taken to assure that the load-carrying capacity of the structure is not jeopardized. If the likelihood of low-strength masonry is confirmed and computations indicate that the load-carrying capacity may have been significantly reduced, tests of cores drilled, or prisms sawed, from the area in question may be required. In such case, three specimens shall be taken for each prism test more than 3.5 MPa below the specified value. Masonry in the area in question shall be considered structurally adequate if the average compressive strength of three specimens is equal to at least 85 percent of the specified value, and if the compressive strength of no single specimen is less than 75 percent of the specified value. Additional testing of specimens extracted from locations represented by erratic core or prism strength test results shall be permitted.

-- End of Section --

SECTION TABLE OF CONTENTS

DIVISION 08 - DOORS & WINDOWS

SECTION 08700

BUILDERS' HARDWARE

PART 1 GENERAL

1.1 REFERENCES
1.2 SUBMITTALS
1.3 PREDELIVERY CONFERENCE
1.4 DELIVERY, STORAGE, AND HANDLING
1.5 SPECIAL TOOLS
1.6 WARRANTY
1.7 OPERATION AND MAINTENANCE MANUALS

PART 2 PRODUCTS

2.1 GENERAL HARDWARE REQUIREMENTS
2.2 TEMPLATES
2.3 HINGES
2.3.1 Hinges for Reverse Bevel Doors with Locks
2.3.2 Contractor's Option
2.3.3 Pivot Hinges
2.4 LOCKS AND LATCHES
2.4.1 Mortise Lock and Latchsets
2.4.2 Electro-Mechanical Locks
2.4.3 Auxiliary Locks and Associated Products
2.4.4 Lock Cylinders (Mortise)
2.4.5 Padlocks
2.4.6 Lock Trim
2.4.7 Electromagnetic Locks
2.5 CIPHER LOCKS
2.6 CARD KEY ACCESS CONTROL
2.6.1 Mortise Lock
2.6.2 Card Reader
2.6.3 Dedicated Portable Lock Interrogation and Programming Unit
2.6.4 Dedicated Compact Computer with Internal Modem
2.6.5 Check-in Station and Card Keys
2.6.6 Door Hardware
2.6.7 Extra Materials
2.7 EXIT DEVICES AND EXIT DEVICE ACCESSORIES
2.7.1 Exit Devices and Auxiliary Items
2.7.2 Door Coordinator
2.7.3 Electric Exit Devices
2.7.4 Automatic Flush Bolts
2.8 KEYING
2.9 DOOR CLOSING DEVICES
2.9.1 Surface Type Closers
2.9.2 Overhead Concealed Closers
2.10 ARCHITECTURAL DOOR TRIM
2.10.1 Door Protection Plates

2.10.1.1 Kick Plates
2.10.1.2 Mop Plates
2.10.2 Push Plates
2.10.2.1 Combination Push-Pull Plates
2.10.2.2 Flat Plates
2.10.3 Door Pulls
2.10.3.1 Pull Plate
2.10.4 Push and Pull Bars
2.11 AUXILIARY HARDWARE
2.12 MISCELLANEOUS
2.12.1 High Security Shrouded Hasp
2.12.2 High Security Padlock
2.12.3 Metal Thresholds
2.12.4 Aluminum Housed Type Weatherseals
2.12.5 Gasketing
2.12.6 Padlock Eyes
2.13 FASTENINGS
2.14 FINISHES
2.15 HARDWARE FOR FIRE DOORS
2.16 LOCKS FOR COFS ONLY
2.16.1 Auxiliary Locks and Associated Products
2.16.2 Electromagnetic Locks
2.17 KEY PAD ACCESS CONTROL
2.17.1 Controller
2.17.2 Keypad
2.17.3 Power Supply

PART 3 EXECUTION

3.1 APPLICATION
3.1.1 Hardware for Fire Doors
3.1.2 Door-Closing Devices
3.1.3 Kick Plates and Mop Plates
3.1.4 Auxiliary Hardware
3.1.5 Thresholds
3.1.6 Weatherseals
3.1.7 Gasketing
3.2 OPERATIONAL TESTS
3.3 FIELD QUALITY CONTROL
3.4 HARDWARE SETS

-- End of Section Table of Contents --

SECTION 08700

BUILDERS' HARDWARE

PART 1 GENERAL

1.1 REFERENCES

The publications listed below form a part of this specification to the extent referenced. The publications are referred to in the text by basic designation only.

AMERICAN SOCIETY FOR TESTING AND MATERIALS (ASTM)

ASTM E 283	(1991) Determining the Rate of Air Leakage Through Exterior Windows, Curtain Walls and Doors Under Specified Pressure Differences Across the Specimen
ASTM F 883	(1990) Padlocks

BUILDERS HARDWARE MANUFACTURERS ASSOCIATION (BHMA)

BHMA-01	(Effective thru Jun 1998) Directory of Certified Locks & Latches
BHMA-02	(Effective thru Jul 1997) Directory of Certified Door Closers
BHMA-03	(Effective thru Jul 1997) Directory of Certified Exit Devices
BHMA ANSI/BHMA A156.1	(1997) Butts and Hinges
BHMA ANSI/BHMA A156.2	(1996) Bored and Preassembled Locks and Latches
BHMA ANSI/BHMA A156.3	(1994) Exit Devices
BHMA ANSI/BHMA A156.4	(1992) Door Controls - Closers
BHMA ANSI/BHMA A156.5	(1992) Auxiliary Locks & Associated Products
BHMA ANSI/BHMA A156.6	(1994) Architectural Door Trim
BHMA ANSI/BHMA A156.7	(1988) Template Hinge Dimensions
BHMA ANSI/BHMA A156.13	(1994) Mortise Locks & Latches
BHMA ANSI/BHMA A156.16	(1989) Auxiliary Hardware
BHMA ANSI/BHMA A156.18	(1993) Materials and Finishes

BHMA ANSI/BHMA A156.20	(1996) Strap and Tee Hinges and Hasps
BHMA ANSI/BHMA A156.21	(1996) Thresholds
BHMA ANSI/BHMA A156.23	(1992) Electromagnetic Locks

DOOR AND HARDWARE INSTITUTE (DHI)

DHI-03	(1989) Keying Systems and Nomenclature
DHI-04	(1976) Recommended Locations for Builders' Hardware for Custom Steel Doors and Frames
DHI 05	(1990) Recommended Locations for Architectural Hardware for Standard Steel Doors and Frames
DHI-A115.1G	(1994) Installation Guide for Doors and Hardware
DHI A115-W	(Varies) Wood Door Hardware Standards (Incl All5-W1 thru A115-W9)

NATIONAL FIRE PROTECTION ASSOCIATION (NFPA)

NFPA 80	(1995) Fire Doors and Fire Windows
NFPA 101	(1997; Errata 97-1) Life Safety Code

1.2 SUBMITTALS

Government approval is required for submittals with a "GA" designation; submittals having an "FIO" designation are for information only. The following shall be submitted in accordance with Section 01330 SUBMITTAL PROCEDURES:

SD-01 Data

Hardware and Accessories; FIO. Card Key Access Control; FIO.

Manufacturer's descriptive data, technical literature, catalog cuts, and installation instructions. Spare parts data for locksets, exit devices, closers, electric locks, electric strikes, electro-magnetic closer holder release devices, and electric exit devices, after approval of the detail drawings, and not later than 1 month prior to the date of beneficial occupancy. The data shall include a complete list of parts and supplies, with current unit prices and source of supply.

SD-04 Drawings

Hardware Devices; FIO.

Detail drawings for hardware devices for computerized card key access control systems, magnetic cards, keyless push button access control systems, and other electrical hardware devices showing complete wiring and schematic diagrams and other details required to demonstrate proper function of units.

SD-07 Schedules

Hardware Schedule; FIO.

Hardware schedule listing all items to be furnished. The schedule shall include for each item: the quantities; manufacturer's name and catalog numbers; the ANSI number specified, sizes; detail information or catalog cuts; finishes; door and frame size and materials; location and hardware set identification cross-references to drawings; corresponding reference standard type number or function number from manufacturer's catalog if not covered by ANSI or BHMA; and list of abbreviations and template numbers.

Keying Schedule; GA.

Keying schedule developed in accordance with DHI-03, after the keying meeting with the user. Master keying shall be developed for each building.

SD-13 Certificates

Hardware and Accessories; FIO.

The hardware manufacturer's certificates of compliance stating that the supplied material or hardware item meets specified requirements. Each certificate shall be signed by an official authorized to certify in behalf of the product manufacturer and shall identify quantity and date or dates of shipment or delivery to which the certificates apply. A statement that the proposed hardware items appear in BHMA-01, BHMA-02 and BHMA-03 directories of certified products may be submitted in lieu of certificates.

1.3 PREDELIVERY CONFERENCE

Upon approval of the Hardware Schedule, the construction Contractor shall arrange a conference with the hardware supplier, Contracting Officer and the using agency to determine keying system requirements. Location of the key control storage system, set-up and key identification labeling will also be determined.

1.4 DELIVERY, STORAGE, AND HANDLING

Hardware shall be delivered to the project site in the manufacturer's original packages. Each article of hardware shall be individually packaged in the manufacturer's standard commercial carton or container, and shall be properly marked or labeled to be readily identifiable with the approved hardware schedule. Each change key shall be tagged or otherwise identified with the door for which its cylinder is intended. Where double cylinder functions are used or where it is not obvious which is the key side of a door, appropriate instructions shall be included with the lock and on the hardware schedule. Manufacturer's printed installation instructions, fasteners, and special tools shall be included in each package.

1.5 SPECIAL TOOLS

Special tools, such as those supplied by the manufacturer, unique wrenches, and dogging keys, shall be provided as required to adjust hardware items.

1.6 WARRANTY

Manufacturer's standard performance guarantees or warranties that extend beyond a one year period shall be provided. The Electronic card lockset

shall be warranted for a period of two years minimum.

1.7 OPERATION AND MAINTENANCE MANUALS

Six complete copies of maintenance instructions listing routine maintenance procedures, possible breakdowns and repairs, and troubleshooting guides shall be provided for the card key access control system. The instructions for electric locks, electric strikes, electro-magnetic closer holder release devices, and electric exit devices shall include simplified diagrams as installed. Training of the owner's personnel shall be accomplished before they are allowed to operate the system. The system's manufacturer shall provide on-site technical personnel to assist with final training. A listing of all the electronic card locks shall be provided together with floor plans identifying the locations of the locks.

PART 2 PRODUCTS

2.1 GENERAL HARDWARE REQUIREMENTS

Hardware shall conform to the requirements specified herein and the HARDWARE SETS listing as indicated on the drawings.

2.2 TEMPLATES

Requirements for hardware to be mounted on metal doors or metal frames shall be coordinated between hardware manufacturer and door or frame manufacturer by use of templates and other information to establish location, reinforcement required, size of holes, and similar details. Templates of hinges shall conform to BHMA ANSI/BHMA A156.7.

2.3 HINGES

Hinges shall conform to BHMA ANSI/BHMA A156.1. Hinges used on metal doors and frames shall also conform to BHMA ANSI/BHMA A156.7. Except as otherwise specified, hinge sizes shall conform to the hinge manufacturer's printed recommendations.

2.3.1 Hinges for Reverse Bevel Doors with Locks

Hinges for reverse bevel doors with locks shall have pins that are made nonremovable by means such as a set screw in the barrel, or safety stud, when the door is in the closed position.

2.3.2 Contractor's Option

Hinges with antifriction bearings may be furnished in lieu of ball bearing hinges, except where prohibited for fire doors by the requirements of NFPA 80.

2.3.3 Pivot Hinges

Pivot hinges shall conform to BHMA ANSI/BHMA A156.4.

2.4 LOCKS AND LATCHES

To the maximum extent possible, locksets, latchsets and deadlocks, and all components thereof, including cylinders and removable cores, shall be the products of a single manufacturer. Exterior locksets and latchsets shall be provided with non-ferrous metal interior mechanisms.

2.4.1 Mortise Lock and Latchsets

Mortise lock, latchsets, and strikes shall be series 1000 and shall conform to BHMA ANSI/BHMA A156.13, operational Grade 1. Mortise type locks and latches for doors 44 mm thick and over shall have adjustable bevel fronts or otherwise conform to the shape of the door. Mortise locks shall have armored fronts.

2.4.2 Electro-Mechanical Locks

Electro-mechanical locks shall allow for locking or unlocking of doors from a remote location by means of card reader. Locks shall be fail safe mode (unlocked when power is off). Locks shall be mortise series conforming to BHMA ANSI/BHMA A156.13 with factory installed electric lock modification or manufactured elector-mechanical locks conforming to BHMA ANSI/BHMA A156.13 test standards.

2.4.3 Auxiliary Locks and Associated Products

Electric strikes shall conform to BHMA ANSI/BHMA A156.5. Strike boxes shall be furnished with dead bolt and latch strikes for Grade 1. Electric strikes shall be locked or unlocked from a remote location in fail safe mode.

2.4.4 Lock Cylinders (Mortise)

Lock cylinders shall comply with BHMA ANSI/BHMA A156.5. Lock cylinder shall have not less than six pins. A grand master keying system shall be provided.

2.4.5 Padlocks

Padlocks shall conform to ASTM F 883. Straps, tee hinges, and hasps shall conform to BHMA ANSI/BHMA A156.20.

2.4.6 Lock Trim

Lock trim shall be cast, forged, or heavy wrought construction of commercial plain design. In addition to meeting the test requirement of BHMA ANSI/BHMA A156.2 or BHMA ANSI/BHMA A156.13, knobs, lever handles, roses, and escutcheons shall be 1.27 mm thick, if unreinforced. If reinforced, the outer shell shall be 0.89 mm thick and the combined thickness shall be 1.78 mm except that knob shanks shall be 1.52 mm thick. Knob diameter shall be 54 to 57 mm. Lever handles shall be of plain design with ends returned to no more than 10 mm from the door face.

2.4.7 Electromagnetic Locks

Electromagnetic locks shall allow for locking or unlocking of doors from a remote location by means of card reader. Electromagnetic locks shall be fail safe (unlocked when power is off) and shall conform to BHMA ANSI/BHMA A156.23

2.5 CIPHER LOCKS

Fully mechanical push button access control cipher lock shall be Simplex/Unican, series 1000, and combination changeable. Lock shall be manufactured by ILCO Unican Corp., Simplex Access Control Division, 2941

Indiana Ave., Winston Salem, NC 27105, USA. Telephone (910)725-1331, FAX (910)725-3269 or approved equal. Cipher lock system shall be a complete mechanical access control system with interchangeable core that unlocks when 5 buttons are pressed in correct sequence. Cipher lock shall not be relock automatically when door closes. The cipher lock shall be capable of code being changed. Access from the interior of stair shall be combination or key override, or passage feature activated from the exterior. Manufacturer shall be furnished complete cipher lock assembly for proper operation.

2.6 CARD KEY ACCESS CONTROL

The card key access control system shall be complete "Saflok", "TESA", "VingCard" "ILCO Unican" or approved equal system. System shall include electronic card lockset with lever handles as scheduled, card reader as scheduled, dedicated portable lock interrogation and programming unit, dedicated compact computer with software, check-in station and card keys, remote controllers, and all other accessory items.

2.6.1 Mortise Lock

Locksets shall be mortise type, tamper resistant with one-inch throw hardened steel insert dead bolt, 3/4-inch throw latch bolt, 2-3/4 inch auxiliary dead bolting latch backset. Finish of lock shall be satin chromium plated, 626, on base metal of brass or bronze. Lever handles shall be provided.

2.6.2 Card Reader

Card reader shall be fully weatherproof, waterproof, and shall be of slender modular design to fit on the door frame. Controller Box, Power Supply Box, and Transformer shall be provided with the card reader.

2.6.3 Dedicated Portable Lock Interrogation and Programming Unit

Battery powered unit with additional external powerpack for programming or viewing and downloading the last 100 lock events from the audit trail. Unit shall include a connection to the server to allow report printing.

2.6.4 Dedicated Compact Computer with Internal Modem

Small computer server with proprietary software with customized defaults, password protected data files, internal modem, parallel printer port for system printer shall be provided of each check-in station.

2.6.5 Check-in Station and Card Keys

Provide a total of 5 check-in stations for encoding cards. Provide a minimum of 6,000 blankcards, consisting of 3,000 each of 2 different customized designs, with ANSI or ISO standard magnetic strips. Cards shall resist tearing, scratching and shall be water resistant.

2.6.6 Door Hardware

Provide door hardware which can be reprogrammed for future software changes at the door units without replacement of original lock components. Magnetic cards shall be programmed on a time basis only to eliminate out of sequence cards.

2.6.7 Extra Materials

Extra Electronic Card Locksets shall be furnished at the rate of 2 locksets for each 100 locksets installed. Extra locksets shall be same as those installed.

2.7 EXIT DEVICES AND EXIT DEVICE ACCESSORIES

Exit devices and exit device accessories shall conform to BHMA ANSI/BHMA A156.3, Grade 1.

2.7.1 Exit Devices and Auxiliary Items

Trim shall be of wrought construction and commercial plain design with straight, beveled, or smoothly rounded sides, corners, and edges. Adjustable strikes shall be provided for rim type and vertical rod devices. Open back strikes shall be provided for pairs of doors with mortise and vertical rod devices; except open back strikes shall be used on labeled doors only where specifically provided for in the published listings. Touch bars shall be heavy-duty type with non-ferrous metal interior mechanisms and shall be provided in lieu of conventional crossbars and arms. Escutcheons shall be provided not less than 175 by 55 mm. Escutcheons shall be cut to suit cylinders and operating trim.

2.7.2 Door Coordinator

Door coordinator with carry bar shall be Type 21 and shall be provided for each pair of doors equipped with an overlapping astragal. The coordinator may be mechanically operated and shall be capable of holding the active door of a pair open until the inactive door has preceded it in the closing cycle. When used as fire exit hardware, the coordinator and carry bar shall be listed or labeled by a nationally recognized independent testing laboratory.

2.7.3 Electric Exit Devices

Electric exit devices shall conform to BHMA ANSI/BHMA A156.3 with factory installed electric lock modification having the capability to lock or unlock from remote location by means of card reader. Exit devices shall comply with life safety requirements of NFPA 101.

2.7.4 Automatic Flush Bolts

Automatic flush bolts shall be Type 25 in accordance with BHMA ANSI/BHMA A156.3, and shall be installed at the top and bottom of the inactive leaf of pairs of fire rated doors where specified in the hardware sets. Flush bolts shall be mortised in the strike edge of the door.

2.8 KEYING

Locks shall be keyed in sets or subsets as scheduled. Locks shall be furnished with the manufacturer's standard construction key system. Change keys for locks shall be stamped with change number and the inscription "U.S. Property - Do Not Duplicate." Keys shall be supplied as follows:

Locks @ all locations	3 change keys each lock.
Blank keys:	50 total.

The keys shall be furnished to the Contracting Officer arranged in a

container in sets or subsets as scheduled.

2.9 DOOR CLOSING DEVICES

Door closing devices shall conform to BHMA ANSI/BHMA A156.4, Grade 1. Closing devices shall be products of one manufacturer for each type specified. The opening resistance of closing devices shall not exceed 67 N applied at the latch stile or exceed 22 N where low opening resistance is scheduled.

2.9.1 Surface Type Closers

Surface type closers shall be Grade 1, Series C02000 Full Cover with options PT-4H, Size 1 or 2 through Size 6, and PT-4D with back check position valve. Except as otherwise specified, sizes shall conform to the manufacturer's published recommendations. Closers for outswinging exterior doors shall have parallel arms or shall be top jamb mounted. Closers for doors close to a wall shall be of narrow projection so as not to strike the wall at the 90-degree open position.

2.9.2 Overhead Concealed Closers

Overhead concealed closers shall be Grade 2, Series C05000.

2.10 ARCHITECTURAL DOOR TRIM

Architectural door trim shall conform to BHMA ANSI/BHMA A156.6.

2.10.1 Door Protection Plates

2.10.1.1 Kick Plates

Kick plates shall be Type J102 stainless steel. Width of plates shall be 50 mm less than door width for single doors and 25 mm less for pairs of doors. Height shall be 250 mm, except where the bottom rail is less than 250 mm the plate shall extend to within 13 mm of the panel mold or glass bead. Edges of metal plates shall be beveled.

2.10.1.2 Mop Plates

Mop plates shall be Type J103 stainless steel. Width of plates shall be 50 mm less than door width for single doors and 25 mm less for pairs of doors. The height shall be 100 mm. Edges of metal plates shall be beveled.

2.10.2 Push Plates

2.10.2.1 Combination Push-Pull Plates

Combination push-pull plates shall be Type J303, 1.27 mm thick minimum stainless steel beveled four edges.

2.10.2.2 Flat Plates

Flat plates shall be Type J304 stainless steel, size 90 mm x 350 mm. Edges of metal plates shall be beveled.

2.10.3 Door Pulls

Door pulls for aluminum doors shall be Category J409 (offset) aluminum of

plain modern design.

2.10.3.1 Pull Plate

Pull plate shall be Type J407 stainless steel, size 90 mm x 350 mm. Edges of metal plates shall be beveled.

2.10.4 Push and Pull Bars

Push and pull bars shall be Category J500, stainless steel. Edges of mounting plates shall be beveled.

2.11 AUXILIARY HARDWARE

Auxiliary hardware, consisting of door stops shall conform to BHMA ANSI/BHMA A156.16. Lever extension flush bolts shall be Type L14081. Dust-proof strikes shall be Type L04011 for doors that are not fire rated. Dust-proof strikes shall be Type L04021 for fire rated doors. Other auxiliary hardware of the types listed below, shall conform to BHMA ANSI/BHMA A156.16.

Hand Rail Brackets: L0381 Coat Hook: L03111

2.12 MISCELLANEOUS

2.12.1 High Security Shrouded Hasp

High security shrouded hasp shall be cast stainless steel high security shrouded hasp as manufactured by Howard Sales Company, and shall conform to Military Specification MS MIL-H-29181 (yd), Mk. 2 Model 9 Style 2, Model NAPEC 0957-right hand; Model NAPEC 0958-left hand, or approved equal.

2.12.2 High Security Padlock

High Security Padlock shall be key-operated high security padlock, Sargent and Greanleaf, Inc. Model No. 833-001 or approved equal. The padlock shall meet the following specifications:

12.7 mm (1/2 inch) diameter hardened steel shackle.

19 mm (3/4 inch) wide by 11.1 mm (7/16 inch) high throat opening in shackle shroud.

15.8 mm (5/8 inch) clear shackle opening when locked.

National Stock Number: 5340-01-217-5068.

2.12.3 Metal Thresholds

Thresholds shall conform to BHMA ANSI/BHMA A156.21. Thresholds for exterior doors shall be extruded aluminum of the type indicated and shall provide proper clearance and an effective seal with specified weather stripping. Where required, thresholds shall be modified to receive projecting bolts of flush bolts and exit devices. Thresholds for doors accessible to the handicapped shall be beveled with slopes not exceeding 1:2 and with heights not exceeding 13 mm.

2.12.4 Aluminum Housed Type Weatherseals

Weatherseals of the type indicated shall consist of extruded aluminum retainers not less than 1.78 mm wall thickness with vinyl, neoprene, silicone rubber, polyurethane or vinyl brush inserts. Aluminum shall be bronze anodized. Weatherseal material shall be of an industrial/commercial grade. Seals shall remain functional through all weather and temperature conditions. Air leakage rate of weatherstripping shall not exceed 0.775 liters per second per lineal meter of crack when tested in accordance with ASTM E 283 at standard test conditions.

2.12.5 Gasketing

Gasketing shall be a compression type seal, silicon based, self-adhesive product for use on steel door frames with wood and steel doors for labeled doors. Color shall be bronze. Air leakage rate of weatherstripping shall not exceed 0.775 liters per second per lineal meter of crack when tested in accordance with ASTM E 283 at standard test conditions.

2.12.6 Padlock Eyes

Padlock eyes for closets doors within living units shall be fabricated of stainless steel and shall be detailed on the drawings.

2.13 FASTENINGS

Fastenings of proper type, size, quantity, and finish shall be supplied with each article of hardware. Machine screws and expansion shields shall be used for attaching hardware to concrete or masonry. Fastenings exposed to the weather in the finished work shall be of brass, bronze, or stainless steel. Sex bolts, through bolts, or machine screws and grommet nuts, where used on reverse-bevel exterior doors equipped with half-surface or full-surface hinges, shall employ one-way screws or other approved tamperproof screws. Screws for the jamb leaf of half-mortise and full-surface hinges attached to structural steel frames shall be one-way or other approved tamperproof type. Fasteners for hardware on exterior doors and interior doors in non-air condition areas shall be stainless steel, type 316.

2.14 FINISHES

Unless otherwise specified, finishes shall conform to those identified in BHMA ANSI/BHMA A156.18. Where painting of primed surfaces is required, painting is specified in Section 09900 PAINTING, GENERAL. Finish for hardware on exterior doors and interior doors in non-air conditioned areas shall be satin stainless steel, 630.

2.15 HARDWARE FOR FIRE DOORS

Hardware for fire doors shall conform to the requirements of NFPA 80and NFPA 101.

2.16 LOCKS FOR COFS ONLY

2.16.1 Auxiliary Locks and Associated Products

Mortise dead locks and dead latches, narrow style dead locks and dead latches, rim latches, dead latches, and dead bolts, shall conform to BHMA ANSI/BHMA A156.5. Strike boxes shall be furnished with dead bolt and latch strikes for Grade 1.

2.16.2 Electromagnetic Locks

Electromagnetic locks shall allow for locking and unlocking of doors from a remote location by means of push buttons. Electromagnetic locks shall be fail safe (unlocked when power is off) and shall conform to BHMA ANSI/BHMA A156.23.

2.17 KEY PAD ACCESS CONTROL

Keypad shall be fully weatherproof, waterproof and shall be of slender modular design to mount directly on wall adjacent to door frame. The keypad shall be constructed from cast stainless steel with switch elements protected under EPDM rubber. Controller box, power supply box, cables shall be provided with the keypad.

2.17.1 Controller

CPU shall include an internal alarm function. If a total of sixteen wrong digits are entered, the keypad will lock itself for 30 seconds and the beeper will sound continuously. Fixed programming shall be provided by push button keypad controls. Door prop alarm function shall be activated when the door remains open on an opening or existing cycle.

2.17.2 Keypad

Keypad shall operate a 5 amp DPDT relay to switch electric exit device. Release time is programmable from 1-99 seconds. A beeper and three LED's provide feedback during operation and programming. Provide spy shield in stainless steel.

2.17.3 Power Supply

Provide 24VDC supply, class 2 rated by UL, 2 amp capacity with regulated and filtered output. Power supply to include battery backup with one or more four amp-hour capacity. Incorporate integral battery charging of sealed acid gel/cell at full charge for instantaneous stand-by power. Include 2.5 amp current limiting automatic breaker to protect stand-by batteries.

PART 3 EXECUTION

3.1 APPLICATION

Hardware shall be located in accordance with DHI-04 and DHI 05, except that deadlocks shall be mounted 1220 mm above finish floor. When approved, slight variations in locations or dimensions will be permitted. Application shall be in accordance with DHI-A115.1G or DHI A115-W. Door control devices for exterior doors such as closers and holders, shall be attached to doors with thru bolts and nuts or sex bolts. Alternate fastening methods may be approved by the Contracting Officer when manufacturers' documentation is submitted to verify that the fastening devices and door reinforcements are adequate to resist wind induced stresses. Electric hardware items and access control devices shall be installed in accordance with manufacturer's printed installation procedures.

3.1.1 Hardware for Fire Doors

Hardware for fire doors shall be installed in accordance with the requirements of NFPA 80. Hardware installed on fire doors, such as locksets, closers, and hinges shall have a visible label or stamp indicating that the hardware items have been approved by an approved testing agency for installation on fire-rated doors.

3.1.2 Door-Closing Devices

Door-closing devices shall be installed and adjusted in accordance with the templates and printed instructions supplied by the manufacturer of the devices. Insofar as practicable, doors opening to or from halls and corridors shall have the closer mounted on the room side of the door.

3.1.3 Kick Plates and Mop Plates

Kick plates shall be installed on the push side of single-acting doors and on both sides of double-acting doors. Mop plates shall be installed on the pull side of the single acting doors.

3.1.4 Auxiliary Hardware

Lever extension flush bolts shall be installed at the top and bottom of the inactive leaf of pairs of doors. The bottom bolt shall operate into a dust-proof floor strike or threshold.

3.1.5 Thresholds

Thresholds shall be secured with a minimum of three fasteners per single door width and six fasteners per double door width with a maximum spacing of 300 mm. Exterior thresholds shall be installed in a bed of sealant with expansion anchors and stainless steel screws, except that anodized bronze thresholds shall be installed with expansion anchors with brass screws. Minimum screw size shall be No. 10 length, dependent on job conditions, with a minimum of 19 mm thread engagement into the floor or anchoring device used.

3.1.6 Weatherseals

Weatherseals shall be located as indicated, snug to door face and fastened in place with color matched metal screws after door and frames have been finish painted. Screw spacing shall be as recommended by manufacturer.

3.1.7 Gasketing

Gasketing shall be installed at the inside edge of the hinge and head and latch sides of door frame. Frames shall be toleranced for a 3 mm clearance between door and frame. Frames shall be treated with tape primer prior to installation.

3.2 OPERATIONAL TESTS

Prior to acceptance of any electrical hardware system, an operational test shall be performed to determine if devices are operating as intended by the specifications. Wiring shall be tested for correct voltage, current carrying capacity, and proper grounding. Stray voltages in lock wiring shall be eliminated to prevent locking devices from releasing in critical situations.

3.3 FIELD QUALITY CONTROL

Architectural Hardware Consultant shall inspect the completed installation and certify that the hardware has been furnished and installed in accordance with the manufacturers' instructions and as specified. The inspection report shall identify any malfunctioning items and recommend adjustment or replacement as appropriate.

3.4 HARDWARE SETS

Hardware Sets shall be as indicated on the drawings.

-- End of Section --

SECTION TABLE OF CONTENTS

DIVISION 08 - DOORS & WINDOWS

SECTION 08810

GLASS AND GLAZING

PART 1 GENERAL

1.1 REFERENCES
1.2 SUBMITTALS
1.3 SYSTEM DESCRIPTION
1.4 DELIVERY, STORAGE AND HANDLING
1.5 PROJECT/SITE CONDITIONS
1.6 WARRANTY

PART 2 PRODUCTS

2.1 FLOAT GLASS
2.1.1 Tinted (Light-Reducing) Glass
2.2 ROLLED GLASS
2.2.1 Wired Glass
2.3 HEAT-TREATED GLASS
2.3.1 Tempered Glass, Clear (For Interior Use)
2.3.2 Tempered Glass, Tinted (Light Reducing)
2.4 MIRRORS
2.4.1 Glass Mirrors
2.4.2 Mirror Accessories
2.4.2.1 Mastic
2.4.2.2 Mirror Frames
2.4.2.3 Mirror Clips
2.5 GLAZING ACCESSORIES
2.5.1 Preformed Tape
2.5.2 Sealant
2.5.3 Glazing Gaskets
2.5.3.1 Fixed Glazing Gaskets
2.5.3.2 Wedge Glazing Gaskets
2.5.3.3 Aluminum Framing Glazing Gaskets
2.5.4 Setting and Edge Blocking
2.6 LAMINATED GLASS

PART 3 EXECUTION

3.1 PREPARATION
3.2 INSTALLATION
3.3 CLEANING
3.4 PROTECTION

-- End of Section Table of Contents --

SECTION 08810

GLASS AND GLAZING

PART 1 GENERAL

1.1 REFERENCES

The publications listed below form a part of this specification to the extent referenced. The publications are referred to in the text by basic designation only.

AMERICAN NATIONAL STANDARDS INSTITUTE (ANSI)

ANSI Z97.1	(1984; Rev 1994) Safety Performance Specifications and Methods of Test for Safety Glazing Materials Used in Buildings

AMERICAN SOCIETY FOR TESTING AND MATERIALS (ASTM)

ASTM C 509	(1994) Elastomeric Cellular Preformed Gasket and Sealing Material
ASTM C 864	(1993) Dense Elastomeric Compression Seal Gaskets, Setting Blocks, and Spacers
ASTM C 920	(1995) Elastomeric Joint Sealants
ASTM C 1036	(1991) Flat Glass
ASTM C 1048	(1992) Heat-Treated Flat Glass - Kind HS, Kind FT Coated and Uncoated Glass
ASTM C 1172	(1996) Laminated Architectural Flat Glass
ASTM D 395	(1989; R 1994) Rubber Property - Compression Set
ASTM E 1300	(1994) Determining the Minimum Thickness and Type of Glass Required to Resist a Specified Load

CODE OF FEDERAL REGULATIONS (CFR)

16 CFR 1201	Safety Standard for Architectural Glazing Materials

GLASS ASSOCIATION OF NORTH AMERICA (GANA)

GANA-01	(1997) Glazing Manual

NATIONAL FIRE PROTECTION ASSOCIATION (NFPA)

NFPA 80	(1995) Fire Doors and Fire Windows

NFPA 252	(1995) Fire Tests of Door Assemblies
NFPA 257	(1996) Fire Tests for Window and Glass Block Assemblies

1.2 SUBMITTALS

Government approval is required for submittals with a "GA" designation; submittals having an "FIO" designation are for information only. The following shall be submitted in accordance with Section 01330 SUBMITTAL PROCEDURES:

SD-01 Data

Glass; FIO. Glazing Accessories; FIO.

Manufacturer's descriptive product data, handling and storage recommendations, installation instructions, and cleaning instructions.

SD-04 Drawings

Glazing Materials and Accessories; FIO.

Drawings showing complete details of the proposed setting methods, mullion details, edge blocking, size of openings, frame details, materials, and types and thickness of glass.

SD-13 Certificates

Glass; FIO.

Certificates stating that the glass meets the specified requirements. Labels or manufacturers marking affixed to the glass will be accepted in lieu of certificates.

SD-14 Samples

Glass; FIO.

Two 203 x 254 mm samples of each of the following: tinted tempered glass, clear tempered glass, and wired glass.

1.3 SYSTEM DESCRIPTION

Glazing systems shall be fabricated and installed watertight and airtight to withstand thermal movement and wind loading without glass breakage, gasket failure, deterioration of glazing accessories, and defects in the work. Glazed panels shall comply with the safety standards, as indicated in accordance with ANSI Z97.1. Glazed panels shall comply with indicated wind loading in accordance with ASTM E 1300.

1.4 DELIVERY, STORAGE AND HANDLING

Glazing compounds shall be delivered to the site in the manufacturer's unopened containers. Glass shall be stored indoors in a safe, well ventilated dry location in accordance with manufacturer's instructions, and shall not be unpacked until needed for installation. Glass shall not be stored on site over 1 month.

1.5 PROJECT/SITE CONDITIONS

Ventilation shall be provided to prevent condensation of moisture on glazing work during installation. Glazing work shall not be performed during damp or raining weather.

1.6 WARRANTY

Manufacturer's standard performance guarantees or warranties that extend beyond a 1 year period shall be provided.

PART 2 PRODUCTS

2.1 FLOAT GLASS

2.1.1 Tinted (Light-Reducing) Glass

Tinted (light-reducing) glass shall be Type I transparent flat type, Class 3-tinted, Quality q3 - glazing select, 50 percent light transmittance, 72 percent shading coefficient, conforming to ASTM C 1036. Color shall be bronze.

2.2 ROLLED GLASS

2.2.1 Wired Glass

Wired glass shall be 6.3 mm (1/4-inch thick), Type II flat type, Class 1 - translucent, Quality q8 - glazing, Form 1 - wired and polished both sides conforming to ASTM C 1036. Wire mesh shall be polished stainless steel Mesh 2 - square. Wired glass for fire-rated windows shall bear an identifying UL label or the label of a nationally recognized testing agency, and shall be rated as indicated on the drawings when tested in accordance with NFPA 257. Wired glass for fire-rated doors shall be tested as part of a door assembly in accordance with NFPA 252. Color shall be clear.

2.3 HEAT-TREATED GLASS

Heat-treated glass shall conform to the following requirements.

2.3.1 Tempered Glass, Clear (For Interior Use)

Tempered glass shall be 6.3 (1/4-inch) thick, kind FT fully tempered, Type I-transparent flat type, Class 1-clear, Condition A uncoated surface, Quality q3 - glazing select. Color shall be clear.

2.3.2 Tempered Glass, Tinted (Light Reducing)

Tempered glass shall be 6.3 mm (1/4-inch) thick, kind FT fully tempered, Type I-transparent flat type, Class 3 - Tinted Light-Reducing, Condition B or C, Quality q3 - glazing select, 50 to 55 percent light transmittance, 70 to 75 percent shading coefficient, conforming to ASTM C 1048. Color shall be bronze.

2.4 MIRRORS

2.4.1 Glass Mirrors

Glass for mirrors shall be Type I transparent flat type, Class 1-clear,

Glazing Quality q1 6 mm (1/4 inch) thick conforming to ASTM C 1036. Glass color shall be clear. Glass shall be coated on one surface with silver coating, copper protective coating, and mirror backing paint. Silver coating shall be highly adhesive pure silver coating of a thickness which shall provide reflectivity of 83 percent or more of incident light when viewed through 6 mm (1/4 inch) thick glass, and shall be free of pinholes or other defects. Copper protective coating shall be pure bright reflective copper, homogeneous without sludge, pinholes or other defects, and shall be of proper thickness to prevent "adhesion pull" by mirror backing paint. Mirror backing paint shall consist of two coats of special scratch and abrasion-resistant paint , and shall be baked in uniform thickness to provide a protection for silver and copper coatings which will permit normal cutting and edge fabrication.

2.4.2 Mirror Accessories

2.4.2.1 Mastic

Mastic for setting mirrors shall be a polymer type mirror mastic resistant to water, shock, cracking, vibration and thermal expansion. Mastic shall be compatible with mirror backing paint, and shall be approved by mirror manufacturer.

2.4.2.2 Mirror Frames

Mirrors shall be provided with mirror frames (J-mold channels) fabricated of one-piece roll-formed Type 304 stainless steel with No. 4 brushed satin finish and concealed fasteners which will keep mirrors snug to wall. Frames shall be 32 x 6 x 6 mm (1-1/4 x 1/4 x 1/4 inch) continuous at top and bottom of mirrors. Concealed fasteners of type to suit wall construction material shall be provided with mirror frames.

2.4.2.3 Mirror Clips

Concealed fasteners of type to suit wall construction material shall be provided with clips.

2.5 GLAZING ACCESSORIES

2.5.1 Preformed Tape

Preformed tape shall be elastomeric rubber extruded into a ribbon of a width and thickness suitable for specific application. Tape shall be of type which will remain resilient, have excellent adhesion, and be chemically compatible to glass, metal, or wood.

2.5.2 Sealant

Sealant shall be elastomeric conforming to ASTM C 920, Type S or M, Grade NS, Class 12.5, Use G, of type chemically compatible with setting blocks, preformed sealing tape and sealants used in manufacturing insulating glass. Color of sealant shall be as selected to match ajoining frame.

2.5.3 Glazing Gaskets

Glazing gaskets shall be extruded with continuous integral locking projection designed to engage into metal glass holding members to provide a watertight seal during dynamic loading, building movements and thermal movements. Glazing gaskets for a single glazed opening shall be continuous

one-piece units with factory-fabricated injection-molded corners free of flashing and burrs. Glazing gaskets shall be in lengths or units recommended by manufacturer to ensure against pull-back at corners. Glazing gasket profiles shall be as indicated on drawings.

2.5.3.1 Fixed Glazing Gaskets

Fixed glazing gaskets shall be closed-cell (sponge) smooth extruded compression gaskets of cured elastomeric virgin neoprene compounds conforming to ASTM C 509, Type 2, Option 1.

2.5.3.2 Wedge Glazing Gaskets

Wedge glazing gaskets shall be high-quality extrusions of cured elastomeric virgin neoprene compounds, ozone resistant, conforming to ASTM C 864, Option 1, Shore A durometer between 65 and 75.

2.5.3.3 Aluminum Framing Glazing Gaskets

Glazing gaskets for aluminum framing shall be permanent, elastic, non-shrinking, non-migrating, watertight and weathertight.

2.5.4 Setting and Edge Blocking

Neoprene setting blocks shall be dense extruded type conforming to ASTM D 395, Method B, Shore A durometer between 70 and 90. Edge blocking shall be Shore A durometer of 50 (+ or - 5). Silicone setting blocks shall be required when blocks are in contact with silicone sealant. Profiles, lengths and locations shall be as required and recommended in writing by glass manufacturer.

2.6 LAMINATED GLASS

Laminated glass shall consist of two layers of Type I transparent float glass, Class 2-tinted Quality q3 - glazing select, conforming to ASTM C 1036. Glass shall be bonded together with 0.76 mm thick PVB interlayer under pressure, or alternatives such as resin laminates, conforming to requirements of 16 CFR 1201 and ASTM C 1172. **Color shall be bronze unless otherwise indicated on drawings. Total thickness of laminated glass shall be nominal 6 mm (1/4 inch).**

PART 3 EXECUTION

3.1 PREPARATION

Openings and framing systems scheduled to receive glass shall be examined for compliance with approved shop drawings, GANA-01 and glass manufacturer's recommendations including size, squareness, offsets at corners, presence and function of weep system, face and edge clearance requirements and effective sealing between joints of glass-framing members. Detrimental materials shall be removed from glazing rabbet and glass surfaces and wiped dry with solvent. Glazing surfaces shall be dry.

3.2 INSTALLATION

Glass and glazing work shall be performed in accordance with approved shop drawings, GANA-01, glass manufacturer's instructions and warranty requirements. Glass shall be installed with factory labels intact and removed only when instructed. Wired glass shall be installed in accordance

with NFPA 80. Edges and corners shall not be ground, nipped or cut after leaving factory. Springing, forcing or twisting of units during installation will not be permitted.

3.3 CLEANING

Upon completion of project, outside surfaces of glass shall be washed clean and the inside surfaces of glass shall be washed and polished in accordance with glass manufacturer's recommendations.

3.4 PROTECTION

Glass work shall be protected immediately after installation. Glazed openings shall be identified with suitable warning tapes, cloth or paper flags, attached with non-staining adhesives. Glass units which are broken, chipped, cracked, abraded, or otherwise damaged during construction activities shall be removed and replaced with new units.

-- End of Section --

SECTION TABLE OF CONTENTS

DIVISION 09 - FINISHES

SECTION 09510

ACOUSTICAL CEILINGS

PART 1 GENERAL

1.1 REFERENCES
1.2 GENERAL REQUIREMENTS
1.3 SUBMITTALS
1.4 DELIVERY AND STORAGE
1.5 ENVIRONMENTAL REQUIREMENTS
1.6 SCHEDULING
1.7 WARRANTY
1.8 EXTRA MATERIALS

PART 2 PRODUCTS

2.1 ACOUSTICAL UNITS AND FIBERGLASS PANELS
2.1.1 Units for Exposed-Grid System
2.1.2 Panels for Exposed-Grid System
2.2 SUSPENSION SYSTEM
2.3 SUSPENSION SYSTEM AT KITCHEN AND DISHWASHING AREAS
2.4 HANGERS
2.5 HANGERS AT KITCHEN AND DISHWASHING AREAS
2.6 FINISHES
2.7 COLORS AND PATTERNS
2.8 CEILING ATTENUATION CLASS AND TEST

PART 3 EXECUTION

3.1 INSTALLATION
3.1.1 Suspension System
3.1.1.1 Plumb Hangers
3.1.1.2 Splayed Hangers
3.1.2 Wall Molding
3.1.3 Acoustical Units and Fiberglass Panels
3.2 CLEANING

-- End of Section Table of Contents --

SECTION 09510

ACOUSTICAL CEILINGS

PART 1 GENERAL

1.1 REFERENCES

The publications listed below form a part of this specification to the extent referenced. The publications are referred to in the text by basic designation only.

AMERICAN SOCIETY FOR TESTING AND MATERIALS (ASTM)

ASTM C 635	(1995) Manufacture, Performance, and Testing of Metal Suspension Systems for Acoustical Tile and Lay-In Panel Ceilings
ASTM C 636	(1996) Installation of Metal Ceiling Suspension Systems for Acoustical Tile and Lay-In Panels
ASTM E 1264	(1990) Standard Classification for Acoustical Ceiling Products
ASTM E 1414	(1991a) Standard Test for Airborne Sound Attenuation Between Rooms Sharing a Common Ceiling Plenum

1.2 GENERAL REQUIREMENTS

Acoustical treatment shall consist of sound controlling units mechanically mounted on a ceiling suspension system. The unit size, texture, finish, and color shall be as specified. The Contractor has the option to substitute inch-pound (I-P) Recessed Light Fixtures (RLF) for metric RLF. If the Contractor opts to furnish I-P RLF, other ceiling elements like acoustical ceiling tiles, air diffusers, air registers and grills, shall also be I-P products. The Contractor shall coordinate the whole ceiling system with other details, like the location of access panels and ceiling penetrations, etc., shown on the drawings. If I-P products are used, the Contractor shall be responsible for all associated labor and materials and for the final assembly and performance of the specified work and products. The location and extent of acoustical treatment shall be as shown on the drawings.

1.3 SUBMITTALS

Government approval is required for submittals with a "GA" designation; submittals having an "FIO" designation are for information only. The following shall be submitted in accordance with Section 01330 SUBMITTAL PROCEDURES:

SD-01 Data

Acoustical Ceiling System; FIO.

Manufacturer's descriptive data, catalog cuts, and installation instructions.

SD-04 Drawings

Acoustical Ceiling System; FIO.

Drawings showing suspension system, method of anchoring and fastening, details, and reflected ceiling plan.

SD-09 Reports

Ceiling Attenuation Class and Test; FIO.

Reports by an independent testing laboratory attesting that acoustical ceiling systems meet specified sound transmission requirements.

SD-13 Certificates

Acoustical Units; FIO.

Certificate attesting that the mineral based acoustical units furnished for the project contains recycled material and showing an estimated percent of such material.

SD-14 Samples

Acoustical Units; FIO.

Two samples of each type of acoustical unit and each type of suspension grid tee section showing texture, finish, and color.

1.4 DELIVERY AND STORAGE

Materials shall be delivered to the site in the manufacturer's original unopened containers with brand name and type clearly marked. Materials shall be carefully handled and stored in dry, watertight enclosures. Immediately before installation, acoustical units shall be stored for not less than 24 hours at the same temperature and relative humidity as the space where they will be installed in order to assure proper temperature and moisture acclimation.

1.5 ENVIRONMENTAL REQUIREMENTS

A uniform temperature of not more than 29 degrees C and a relative humidity of not more than 70 percent shall be maintained before, during, and after installation of acoustical units.

1.6 SCHEDULING

Interior finish work such as plastering and concrete work shall be complete and dry before installation. Mechanical, electrical, and other work above the ceiling line shall be completed and heating, ventilating, and air conditioning systems shall be installed and operating in order to maintain temperature and humidity requirements.

1.7 WARRANTY

Manufacturer's standard performance guarantees or warranties that extend beyond a one year period shall be provided.

1.8 EXTRA MATERIALS

Spare tiles of each color shall be furnished at the rate of 5 tiles for each 1000 tiles installed. Tiles shall be from the same lot as those installed.

PART 2 PRODUCTS

2.1 ACOUSTICAL UNITS AND FIBERGLASS PANELS

Acoustical units shall conform to ASTM E 1264, Class A, and the following requirements:

2.1.1 Units for Exposed-Grid System

Type: IV (mineral fiber with membrane-faced overlay), Form 2.

Minimum NRC: 0.70 when tested on mounting No. E-400

Pattern: E1.

Nominal size: As indicated.

Edge detail: Beveled Tegular Lay-In, "Armstrong Ultima RH90" or approved equal unless otherwise indicated on drawings.

Finish: Factory-applied white finish.

Minimum LR coefficient: 0.80.

Minimum CAC: 35.

2.1.2 Panels for Exposed-Grid System

Kitchen and Dish Washing Areas

Type: IV, Form 2 (fiberglass reinforced plastic).
NRC grade: N/A.
Pattern: Gloss/Embossed surfaseal finish.
Thickness: 2.3 mm (.09 inch)
Nominal size: 600 mm x 1200 mm (24 inch x 48 inch).
Edge detail: Square.
Finish: Factory-applied standard finish (white).
LR grade: N/A.
CAC range: N/A.
Surface burning characteristic: Class A

2.2 SUSPENSION SYSTEM

Suspension system shall be standard exposed-grid 24 mm (15/16 inch) width flange unless otherwise indicated on drawings, and shall conform to ASTM C 635 for intermediate-duty systems. Surfaces exposed to view shall be aluminum or steel with a factory-applied white baked-enamel finish. Wall molding shall have a flange not less than 23 mm. Inside and outside corner caps shall be provided. Suspended ceiling framing system shall have the capability to support the finished ceiling, light fixtures, air diffusers,

and accessories, as shown. The suspension system shall have a maximum deflection of 1/360 of span length.

2.3 SUSPENSION SYSTEM AT KITCHEN AND DISHWASHING AREAS

Suspension system shall be a white rigid, high strength, pultruded fiberglass reinforced plastic, exposed-grid standard width flange, and shall conform to ASTM C 635 for intermediate-duty systems. Wall molding shall have a flange of not less than 20 mm (3/4 inch) and shall be provided with outside corner caps. Inside corner caps shall be provided where, due to the configuration of the installation, they are needed to produce a workmanlike appearance.

2.4 HANGERS

Hangers shall be galvanized steel wire. Hangers and attachment shall support a minimum 1330 N ultimate vertical load without of supporting material or attachment.

2.5 HANGERS AT KITCHEN AND DISHWASHING AREAS

Hangers shall be galvanized 12 gauge stainless steel wire. Hangers and attachment shall support a minimum 1330 N (300 pounds) ultimate vertical load without failure of supporting material or attachment.

2.6 FINISHES

Acoustical units and suspension system members shall have manufacturer's standard textures, patterns and finishes as specified. Ceiling suspension system components shall be treated to inhibit corrosion and high humidity environment.

2.7 COLORS AND PATTERNS

Colors and patterns for acoustical units and suspension system components shall be as indicated.

2.8 CEILING ATTENUATION CLASS AND TEST

Ceiling attenuation class (CAC) range of acoustical units, when required, shall be determined in accordance with ASTM E 1414. Test ceiling shall be continuous at the partition and shall be assembled in the suspension system in the same manner that the ceiling will be installed on the project. System shall be tested with all acoustical units installed.

PART 3 EXECUTION

3.1 INSTALLATION

Acoustical work shall be provided complete with necessary fastenings, clips, and other accessories required for a complete installation. Mechanical fastenings shall not be exposed in the finished work. Hangers shall be laid out for each individual room or space. Hangers shall be placed to support framing around beams, ducts, columns, grilles, and other penetrations through ceilings. Main runners and carrying channels shall be kept clear of abutting walls and partitions. At least two main runners shall be provided for each ceiling span. Wherever required to bypass an object with the hanger wires, a subsuspension system shall be installed, so that all hanger wires will be plumb.

3.1.1 Suspension System

Suspension system shall be installed in accordance with ASTM C 636 and as specified herein. There shall be no hanger wires or other loads suspended from underside of steel decking.

3.1.1.1 Plumb Hangers

Hangers shall be plumb and shall not press against insulation covering ducts and pipes.

3.1.1.2 Splayed Hangers

Where hangers must be splayed (sloped or slanted) around obstructions, the resulting horizontal force shall be offset by bracing, countersplaying, or other acceptable means.

3.1.2 Wall Molding

Wall molding shall be provided where ceilings abut vertical surfaces. Wall molding shall be secured not more than 75 mm from ends of each length and not more than 400 mm on centers between end fastenings.

3.1.3 Acoustical Units and Fiberglass Panels

Acoustical units and fiberglass panels shall be installed in accordance with the approved and fiberglass panels installation instructions of the manufacturer. Edges of acoustical units and fiberglass panels shall be in close contact with metal supports, and in true alignment. Acoustical units shall be arranged so that units less than one-half width are minimized. Units in exposed-grid system shall be held in place with manufacturer's standard hold-down clips, if units weigh less than 5 kg per square m.

3.2 CLEANING

Following installation, dirty or discolored surfaces of acoustical units shall be cleaned and left free from defects. Units that are damaged or improperly installed shall be removed and new units provided as directed.

-- End of Section --

SECTION TABLE OF CONTENTS

DIVISION 09 - FINISHES

SECTION 09650

RESILIENT FLOORING

PART 1 GENERAL

1.1 REFERENCES
1.2 FIRE RESISTANCE REQUIREMENTS
1.3 SUBMITTALS
1.4 DELIVERY AND STORAGE
1.5 SCHEDULING
1.6 WARRANTY
1.7 EXTRA MATERIALS

PART 2 PRODUCTS

2.1 VINYL-COMPOSITION TILE TYPE
2.2 Deleted
2.2.1 Deleted
2.3 RUBBER FLOORING TYPE
2.3.1 Rubber Tile
2.4 STAIR TREADS, RISERS, AND STRINGERS
2.5 INTEGRAL COVED BASE
2.6 Deleted
2.7 FEATURE STRIP
2.8 TRANSITION STRIP
2.9 ADHESIVE
2.10 POLISH
2.11 SEALANTS
2.12 MANUFACTURER'S COLOR AND TEXTURE
2.13 CONCRETE MOISTURE VAPOR TREATMENT

PART 3 EXECUTION

3.1 EXAMINATION/VERIFICATION OF CONDITIONS
3.2 SURFACE PREPARATION
3.3 MOISTURE TEST
3.4 INSTALLATION OF VINYL-COMPOSITION TILE
3.5 Deleted
3.6 INSTALLATION OF RUBBER FLOORING
3.7 INSTALLATION OF FEATURE STRIPS
3.8 INSTALLATION OF RESILIENT BASE
3.9 INSTALLATION OF TREADS AND RISERS
3.10 Deleted
3.11 CLEANING
3.12 PROTECTION

-- End of Section Table of Contents --

SECTION 09650

RESILIENT FLOORING

PART 1 GENERAL

1.1 REFERENCES

The publications listed below form a part of this specification to the extent referenced. The publications are referred to in the text by basic designation only.

AMERICAN SOCIETY FOR TESTING AND MATERIALS (ASTM)

ASTM D 2240	(1997) Rubber Property - Durometer Hardness
ASTM D 4078	(1992; R 1996) Water Emulsion Floor Polish
ASTM E 648	(1997) Critical Radiant Flux of Floor-Covering Systems Using a Radiant Heat Energy Source
ASTM E 662	(1995) Specific Optical Density of Smoke Generated by Solid Materials
ASTM F 1066	(1995a) Vinyl Composition Floor Tile
ASTM F 1344	(1993) Rubber Floor Tile
ASTM F 1869	(1998) Measuring Moisture Vapor Emission of Concrete Sub-floors Using Anhydrous Calcium Chloride

RESILIENT FLOOR COVERING INSTITUTE (RFCI)

RFCI	(1995) Addressing Moisture Related Problems Relevant to Resilient Floor Coverings Installed Over Concrete

1.2 FIRE RESISTANCE REQUIREMENTS

Flooring in corridors and exits shall have a minimum average critical radiant flux of 0.45 watts per square centimeter when tested in accordance with ASTM E 648. The smoke density rating shall be less than 450 when tested in accordance with ASTM E 662.

1.3 SUBMITTALS

Government approval is required for submittals with a "GA" designation; submittals having an "FIO" designation are for information only. The following shall be submitted in accordance with Section 01330 SUBMITTAL PROCEDURES:

SD-01 Data

Resilient Flooring and Accessories; FIO.

Manufacturer's descriptive data and installation instructions including cleaning and maintenance instructions.

SD-09 Reports

Resilient Flooring and Accessories; FIO.

Copies of test reports showing that representative product samples of the flooring proposed for use have been tested by an independent testing laboratory within the past three years or when formulation change occurred and conforms to the requirements specified.

Moisture of Alkalinity Tests; FIO.

Method of Alkalinity Test and Relative Humidity Test.

Two copies of test reports of moisture vapor and alkalinity tests of concrete sub floors. Provide starting date of test, person conducting the test and all calculations. Provide a diagram of the building showing test locations with the testing results prior to floor covering installation.

SD-14 Samples

Resilient Flooring and Accessories; FIO.

Three samples of each indicated color and type of flooring and base. Sample size shall be minimum 60 x 100 mm.

1.4 DELIVERY AND STORAGE

Materials shall be delivered to the building site in original unopened containers bearing the manufacturer's name, project identification, and handling instructions. Materials shall be stored in a clean dry area with temperature maintained above 21 degrees C for 2 days prior to installation, and shall be stacked according to manufacturer's recommendations.

1.5 SCHEDULING

Resilient flooring application shall be scheduled after the completion of other work which would damage the finished surface of the flooring.

1.6 WARRANTY

Manufacturer's standard performance guarantees or warranties that extend beyond a one year period shall be provided.

1.7 EXTRA MATERIALS

Extra flooring material of each color and pattern shall be furnished at the rate of 5 tiles for each 1000 tiles. Extra materials shall be from the same lot as those installed. Extra base material composed of 6 m of each color shall be furnished.

PART 2 PRODUCTS

2.1 VINYL-COMPOSITION TILE TYPE

Vinyl-composition tile shall conform to ASTM F 1066, Class 2,(through pattern tile), Composition 1, asbestos-free, and shall be 300 mm square and 3.2 mm thick. Tile shall have the color and pattern uniformly distributed throughout the thickness of the tile. Flooring in any one continuous area shall be from the same lot and shall have the same shade and pattern.

2.2 Deleted

Deleted

2.2.1 Deleted

Deleted

2.3 RUBBER FLOORING TYPE

2.3.1 Rubber Tile

Rubber tile shall conform to ASTM F 1344 Class 1 homogeneous construction, Type B (through mottled) 300 mm square. Surface shall be smooth. Overall thickness shall be 3 mm thick.

2.4 STAIR TREADS, RISERS, AND STRINGERS

Treads, risers, and stringers shall conform to composition rubber compounded from a mixture of synthetic and reclaimed rubber. Overall thickness at treads shall be not less than 3 mm . Durometer hardness shall be 90, plus or minus 5, when tested in accordance with ASTM D 2240. Design shall be either a one piece nosing/tread/riser or a two piece nosing/tread with a matching coved riser. Installation shall include stringer angles on both the wall and banister sides, and landing trim. Surface of treads shall be raised diamond pattern.

2.5 INTEGRAL COVED BASE

A metal or vinyl, square cap strip and vinyl, rubber, or wood fillet strip with a minimum radius of 19 mm shall be provided for integral coved bases as shown.

2.6 Deleted

Deleted

2.7 FEATURE STRIP

Feature strips shall be vinyl, 25 mm wide, and of thickness to match the flooring. Color shall be as indicated.

2.8 TRANSITION STRIP

A vinyl transition strip tapered to meet abutting material shall be provided.

2.9 ADHESIVE

Adhesive for flooring and wall base shall be as recommended by the flooring

manufacturer.

2.10 POLISH

Polish shall conform to ASTM D 4078.

2.11 SEALANTS

Sealants shall be in accordance with Section 07900 JOINT SEALING.

2.12 MANUFACTURER'S COLOR AND TEXTURE

Color and texture shall be as indicated on the drawings.

2.13 CONCRETE MOISTURE VAPOR TREATMENT

Concrete sub-floors exceeding 3 lbs./1000 square feet/24 hrs. of vapor emission and a pH level greater than 10, shall receive moisture vapor treatment (hereafter stated as "Treatment"). Treatment shall reduce emission levels to 3 lbs./1000 square feet/24 hrs. or lower (provide testing after curing of Treatment to verify that Treatment has reduced emission to 3 lbs./1000 square feet/24 hrs. or lower), lower pH levels to 10 or lower, and provide a suitable surface for the bonding of floor covering materials. The Treatment shall not produce detrimental conditions to the concrete slab or the floor covering materials by producing too low levels of emission or pH. Treatment material will consist of a two component penetrating polymer with elastomeric properties and vapor control at joints and cracks. The Treatment material shall be specifically formulated for flooring treatment. Installed Treatment material shall be compatible with the flooring adhesives. A written statement stating compatibility from the Treatment manufacturer shall be submitted to the Contracting Officer. Treatment manufacturer and installer will provide proof of the following:

a. Evidence of 5 successful floor Treatment projects with similar size and complexity, with a minimum of 8 years of age.

b. Warranty covering the material and installation for a period of 10 years. Manufactures standard warranty shall provide the following coverage:

1. Cover the installed moisture vapor treatment, cementious materials, floor coverings and adhesives in the event that treatment is affected by vapor emission and/or pH levels.

2. Evidence of product liability insurance policy with an insurer of not less than an "A" rating from one of the 4 major rating services. A certificate of insurance shall be delivered in the amount of $2,000,000.00 per occurrence to the owner and the general contractor as co-insured.

c. Installer shall provide proof of installer certification by the Treatment manufacturer and bondability in the amount of the contract.

PART 3 EXECUTION

3.1 EXAMINATION/VERIFICATION OF CONDITIONS

The Contractor shall examine and verify that site conditions are in agreement with the design package and shall report all conditions that will prevent a proper installation. The Contractor shall not take any corrective action without written permission from the Government.

3.2 SURFACE PREPARATION

Flooring shall be in a smooth, true, level plane, except where indicated as sloped. Before any work under this section is begun, all defects such as rough or scaling concrete, low spots, high spots, and uneven surfaces shall have been corrected, and all damaged portions of concrete slabs shall have been repaired as recommended by the flooring manufacturer. Concrete curing compounds, other than the type that does not adversely affect adhesion, shall be entirely removed from the slabs. Paint, varnish, oils, release agents, sealers, waxers, and adhesives shall be removed, as recommended by the flooring manufacturer. The contractor shall apply a floor hardener/sealer to areas indicated on the contract drawings. Requirements for floor hardener/sealer is found in Section 03300 CAST-IN-PLACE STRUCTURAL CONCRETE.

3.3 MOISTURE TEST

The concrete slab shall be allowed to cure for a period of at least two months and then exposed to air conditioning, etc. for the purpose of acclimating the slab for at least 3-weeks prior to taking the moisture test. This time period may be shortened if use of the Relative Humidity testing determines a shorter curing/acclimation time period is required prior to performing the moisture test. Resulting test holes in the concrete slab shall be repaired by an approved method. The concrete slab shall be protected from the weather by a Contracting Officer's approved method during the curing and acclimation period. Concrete slab shall be tested for moisture emission rate and excessive alkalinity in accordance with ASTM F 1869 (anhydrous calcium chloride test) and Resilient Floor Covering Institute (RFCI). Provide anhydrous calcium chloride at a rate of three test in areas up to 1,000 square feet and one additional test per 1,000 square feet thereafter. Provide industry standard pH testing at the same rate.

3.4 INSTALLATION OF VINYL-COMPOSITION TILE

Tile flooring shall be installed with adhesive in accordance with the manufacturer's installation instructions. Tile lines and joints shall be kept square, symmetrical, tight, and even. Edge width shall vary as necessary to maintain full-size tiles in the field, but no edge tile shall be less than one-half the field tile size, except where irregular shaped rooms make it impossible. Flooring shall be cut to, and fitted around, all permanent fixtures, built-in furniture and cabinets, pipes, and outlets. Edge tile shall be cut, fitted, and scribed to walls and partitions after field flooring has been applied.

3.5 Deleted

Deleted

3.6 INSTALLATION OF RUBBER FLOORING

Rubber flooring for stair landing in conjunction with rubber stair trends shall be installed with adhesive in accordance with the manufacturer's written installation instructions. Lines and joints shall be kept square,

symmetrical, tight, and even. Edge width shall vary as necessary to maintain full-size tiles in the field, but no edge pieces shall be less than one-half the field size, except where irregular shaped landing make it impossible. Edges shall be cut, fitted, and scribed to guardrail.

3.7 INSTALLATION OF FEATURE STRIPS

Edge strips shall be secured with adhesive as recommended by the manufacturer. Edge strips shall be provided at locations where flooring termination is higher than the adjacent finished flooring, except at doorways where thresholds are provided.

3.8 INSTALLATION OF RESILIENT BASE

Wall base shall be installed with adhesive in accordance with the manufacturer's written instructions. Base joints shall be tight and base shall be even with adjacent resilient flooring. Voids along the top edge of base at masonry walls shall be filled with caulk.

3.9 INSTALLATION OF TREADS AND RISERS

Stair treads and risers shall be installed with adhesive in accordance with the manufacturer's written installation instructions. Treads and risers shall cover the full width of the stairs. Stairs wider than manufacturer's standard lengths shall have equal length pieces butted together to cover the treads.

3.10 Deleted

Deleted

3.11 CLEANING

Immediately upon completion of installation of tile in a room or an area, flooring and adjacent surfaces shall be cleaned to remove all surplus adhesive. After installation, flooring shall be washed with a cleaning solution, rinsed thoroughly with clear cold water, and, except for rubber tile, rubber stair treads, and VCT (Non-Static) given two coats of polish in accordance with manufacturers written instructions. After each polish coat, floors shall be buffed to an even luster with an electric polishing machine. **Raised pattern rubber flooring, rubber tile and sheet rubber flooring and rubber stair treads, shall be cleaned and maintained as recommended by the manufacturer.**

3.12 PROTECTION

From the time of laying until acceptance, flooring shall be protected from damage as recommended by the flooring manufacturer. Flooring which becomes damaged, loose, broken, or curled shall be removed and replaced.

-- End of Section --

ITEM	CODE	NAME	DESCRIPTION	MAKE	MODEL NUMBER
1	C	Scale, Counter Spring Dial	Spring dial scale with wheeled stand. Temperature compensated spring, rack and pinion weighing mechanism. Non-glare three plated lock steel face with large vertical numbers. Stainless steel platform cover meeting USDA standard. See Equipment Schedule for quantity and dimensions.	Hobart	HOB 15
2	C	Desk, Double Pedestal	Double-pedestal desk has three storage drawers in the left pedestal and a storage drawer and file drawer in the right pedestal. Nonconference-style desk does not have an overhang. See Equipment Schedule for quantity and dimensions.	GSA	7110-00-149-1626
3	C	Shelving, Modular System	Wire shelves shall be stainless steel construction. Posts are fitted with adjustable leveling bolts. Shelf system meets U.S. Government Specifications MIL-S-40144E. See Equipment Schedule for quantity and dimensions.	Metro; Metropolitan Wire Corporation	
4	C	Platform Truck	2000-pound capacity aluminum platform truck has two 8” swivel casters and two 8” rigid casters, removable 1” aluminum pipe handle, and one end rack. Diamond tread deck is fully wrapped around with a grey rubber bumper. See Equipment Schedule for quantity and dimensions.	Colson	10-6220
5	C	Shelving, Stationary	Aeroform shelf is press formed from a single sheet of 18 ga stainless steel. Each inside corner is fitted with an extruded aluminum bracket to accommodate an upright. The uprights are 1” O.D. stainless steel fitted with top caps and adjustable sanitary bullet foot. See Equipment Schedule for quantity and dimensions.	Servolift Eastern	80-A5
6	A	Freezer Condenser Unit	See Equipment Schedule for quantity, capacity and other requirements.		
6a	**A**	**Freezer Evaporation Unit (Cooler)**	**See Equipment Schedule for quantity, capacity and other requirements**		
7	A	Refrigerator Condenser Unit	See Equipment Schedule for quantity, capacity and other requirements.		
7a	A	Refrigerator Evaporator Unit	See Equipment Schedule for quantity, capacity and other requirements.		

Equipment Class: A = Contractor Furnished and Installed C = Government Furnished and Installed L = Other, Not In Contract

ITEM CODE		NAME	DESCRIPTION	MAKE	MODEL NUMBER
8	A	Doorway Closure	USDA vinyl strips to be 8 inches wide with a 2-inch nominal overlap, reinforced with nylon cord, and with an electronically heat sealed loop at the top to swing free on a round rod supported by end brackets attached to the inside face of the door frame. Vinyl material shall be 0.08 inches thick, approved for use in contact with exposed food in temperatures from -40 degrees to +150 degrees fahrenheit. Each strip shall be 8 inches wide with three embedded nylon reinforcing cords the full height spaced approximately 3 inches apart. See Equipment Schedule for quantity and dimensions of door opening.	Curtron Industries Inc.	M-200 Polar Strip Doors
9	A	Faucet Hose Station	See Mechanical Dwgs for fixture type.		
10a	A	Freezer	See Mechanical Dwgs for details.		
10b	A	Refrigerator- Dairy	See Mechanical Dwgs for details.		
10c	A	Refrigerator- Vegetable	See Mechanical Dwgs for details.		
10d	A	Freezer	See Mechanical Dwgs for details.		
10e	A	Refrigerator- Vegetable	See Mechanical Dwgs for details.		
11	A	Air Curtain	Air curtain shall be Underwriters Laboratories Listed and meet the requirements of the National Electric Code. Cabinet shall be a self contained one piece molded dark bronze high density polyethylene material. Adjustable inlet air louver assembly shall include a washable aluminum air filter. See Equipment Schedule for quantity and dimensions. See electrical for wiring and switch/control requirements.	Mars Air Doors	72CH (unheated)
11a	A	Air Curtain	Air curtain shall be Underwriters Laboratories Listed and meet the requirements of the National Electric Code. Cabinet shall be a self contained one piece molded dark bronze high density polyethylene material. Adjustable inlet air louver assembly shall include a washable aluminum air filter. See Equipment Schedule for quantity and dimensions. See electrical for wiring and switch/control requirements.	Mars Air Doors	72C (unheated)
11b	A	NOT USED			

Equipment Class: A = Contractor Furnished and Installed C = Government Furnished and Installed L = Other, Not In Contract

ITEM CODE		NAME	DESCRIPTION	MAKE	MODEL NUMBER
12	A	Floor Trough with Grate	Floor water receptacle unit is constructed of heavy duty, 14 gauge stainless steel, type 304, 18-8 all welded, ground and polished smooth. Receptacle is pitched toward waste for complete drainage. All troughs are fitted with special stainless steel waste cup with removable perforated stainless steel baskets. Unit is furnished with a type 304 stainless steel subway grate. Grating is constructed of 3/16" x 1" bars, set in a vertical position with open front and back for ease of draining. Two (2) ½" rods, set 3" in from each edge, are wedged through the bars full length. Three (3) ½" rods are used for grating over 15" wide. There is 13/16" clearance between bars so that wheels of mobile equipment will not become wedged. See Architectural drawings for locations and dimensions.	Food Service Corporation	
12a	C	Can Racks	The can storage rack is stationary, mounted on four adjustable flanged feet welded to the uprights. The top is .060" thick aluminum with all edges turned down 2". This unit is loaded from the rear and has a 210 #10 can capacity. See Equipment Schedule for quantity and dimensions.	Servolift Eastern	CSR-210
13	A	Cart	Model JB racks are: fabricated entirely of stainless steel; 1 ½ " square 16 gauge type 300 tubular frame; approved by the National Sanitation foundation and the U.S. Department of Agriculture. See Equipment Schedule for quantity and dimensions.	John Boos & Co.	Model JB
14	A	Sink, Vegetable Prep	Custom fabricated stainless steel stainless steel sink. See Equipment Schedule for quantity and dimensions.		
15	A	Waste Pulping Disposer	See Mechanical Dwgs for details.	Hobart	Model FD500
16	A	Refrigerator, Roll-Thru	Exterior cabinet including front, sides, doors, and louver rails shall be of heavy gauge stainless steel with #4 finish. Cabinet interior and a door liners shall be of stainless steel. Interior floors shall be of reinforced stainless steel. 38.8 cubic feet nominal capacity. See Equipment Schedule for quantity and dimensions.	Trausen Hobart	RR1-32 L P UT (roll-thru/self-contained) QESD1
17	C	Table	Stainless steel work tables shall have no drip countertop edge, square edge flush fit design, and built in drawer. Construction shall be: 14 gauge type 300 stainless steel top, 1 5/8" diameter tubular stainless steel legs with adjustable bullet feet, stainless steel gussets and 18 gauge type 430 stainless steel under shelf. See Equipment Schedule for quantity and dimensions.	TABCO (Tables Mfg. Inc.)	VSS-304

Equipment Class: A = Contractor Furnished and Installed C = Government Furnished and Installed L = Other, Not In Contract

ITEM CODE		NAME	DESCRIPTION	MAKE	MODEL NUMBER
18	C	Table, /Equipment Stand	Stainless steel work tables shall have no drip countertop edge, square edge flush fit design, and built-in drawer. Construction shall be: 14 gauge type 300 stainless steel top, 1 5/8" diameter tubular stainless steel legs with adjustable bullet feet, stainless steel gussets and 18 gauge type 430 stainless steel under shelf. See Equipment Schedule for quantity and dimensions.	TABCO (Tables Mfg. Inc.)	VSS-303
19	C	Table, /Equipment Stand, Mobile	Stainless steel work tables shall have no drip countertop edge, and square edge flush fit design. Construction shall be: 14 gauge type 300 stainless steel top, 1 5/8" diameter tubular stainless steel legs with adjustable bullet feet, stainless steel gussets and 18 gauge type 430 stainless steel undershelf.	TABCO (Tables Mfg. Inc.)	SAG-MT-302
20	A	Storage Shelving System	Top track high density storage system. See Equipment Schedule for quantity and dimensions.	InterMetro Industries Corporation	
21	A	Table with Sink	Stainless steel work tables shall have no drip countertop edge, square edge flush fit design, and built-in sink. Construction shall be: 14 gauge type 300 stainless steel top, 1 5/8" diameter tubular stainless steel legs with adjustable bullet feet, stainless steel gussets and 18 gauge type 430 stainless steel undershelf. See Equipment Schedule for quantity and dimensions.	TABCO (Tables Mfg. Inc.)	VSS-306 & TA-11D
22	C	Meat Slicing Machine	Two speed automatic slicing with ½ HP permanently lubricated ball bearing motor. The knife, knife cover, gauge plate, and carriage are stainless steel. The platter area is burnished aluminum. Slicer comes with a tubular chute and plunger for random slicing of fruits, vegetables and meats. See Equipment Schedule for quantity and dimensions.	Hobart	2712
23	A	Vegetable Peeling Machine	Peeler comes with 1 HP motor with a peeling capacity of 50-60 pounds in 1-3 minutes and peel trip unit. Stand is furnished with solenoid water control valve and air-gap type inlet. Peeler Unit: Cylindrical construction, heliarc-welded stainless steel with abrasive permanently bonded on interior surface of peeling hopper. Discharge chute is cast aluminum. Abrasive Disc: Lightweight fiberglass reinforced plastic disc. Peel Trap Unit: This unit consists of a base, strainer and legs. The strainer is made all of stainless steel. The bottom of drawer is removable for easy cleaning. See Equipment Schedule for quantity and dimensions.	Hobart	6460

Equipment Class: A = Contractor Furnished and Installed C = Government Furnished and Installed L = Other, Not In Contract

ITEM CODE		NAME	DESCRIPTION	MAKE	MODEL NUMBER
24	A	Waste Pulper with Through Connection	See Mechanical Dwgs for details.	Hobart	Model WR1000
25	C	Food Cutter	¾ HP cutter slices, dices, shreds and grates vegetable, fruits, cheeses, and bread crumbs. Cutter comes with storage rack for: Slicer discs (S2, S3, S5, S8, S11, S14, S5C, J2x2, J4x4 & J6x6), shredder discs (SH2, SH3, SH4 & SH7), and dicing grids (D8, D11, D14 & D22). See Equipment Schedule for quantity and dimensions.	Mannhart, Inc. Hobart	Model M3000 FP150
26	A	Rack, Utensil	Table mounted rack unit is all welded-stainless steel. Flat bar and tubular supports are stainless steel. Tubular supports extend through table top and are secured to the under shelf. See Equipment Schedule for quantity and dimensions.	Tabco	ST-48
27	A	Range, (4) Burner	Gas restaurant range with four 20,000 BTU/hour input per section open burners, with oven below to have automatic lighting with oven and pilot gas shut off in case of pilot outage. Oven to have 35,000 BTU/hour with one oven rack and two rack positions. Unit is provided with stainless steel door panel, sides and legs. See Equipment Schedule for quantity and dimensions.	Vulcan	Model 24L
28	A	Pan, Frying and Braising	Gas closed base tilting braising pan: 40 gallon capacity tilting braising pan, gas heated, closed base with electronic ignition and spray hose - hot and cold faucet mounted to base frame below pan at front. Pan body to be 14 gauge stainless steel, front hinged, cooking surface stainless steel bonded to ½" thick steel plate, interior coved bottom. See Equipment Schedule for quantity and dimensions.	Vulcan	Model G40C
29	A	Refrigerator, Rapid Thaw	Rapid thaw roll-in thawing cabinet: Stainless steel case front and doors. The 2-door unit has foamed-in-place polyurethane insulation throughout the cabinet and doors. The air circulating fans and plasticized, finned, forced convection coil are contained within a top mounted housing. All condensate water is removed by a vaporizer located in the top of the cabinet. See Equipment Schedule for quantity and dimensions (64.3 feet ^{3} interior capacity).	Victory Hobart	TRIS-2D-S7 TQES2
30	A	Floor Trough with Grate	Same as Item 12.		

Equipment Class: A = Contractor Furnished and Installed C = Government Furnished and Installed L = Other, Not In Contract

ITEM CODE		NAME	DESCRIPTION	MAKE	MODEL NUMBER
31	A	Frozen Food Cabinet (pass-thru)	Two section 32” deep model with wide doors. Exterior cabinet including front, sides, doors and louver rails of heavy gauge stainless steel with #4 finish. Cabinet interior and door liners of stainless steel. 6” stainless steel legs are adjustable. Unit provided with a top mounted automatic non-electric condensate disposal system, and stainless steel shelving and tray slides. See Equipment Schedule for quantity and dimensions (54 cubic feet nominal interior capacity).	Traulsen Hobart	Model RLT 2-32 W UT QSDF2
32	A	Oven	Double deck gas convection oven: Stainless steel front, sides, top, rear enclosure panel and legs. Stainless steel doors with windows. Two 30,000 BTU/hr burners per section, 120,000 BTU/hr total input. Electronic spark igniters. 1/3 HP two speed oven blower motors. Solid state temperature controls. Extra oven racks. Stainless steel drip pans. Flexible gas hose with quick disconnect and restraining device. Down draft flue diverter for direct vent connection. See Equipment Schedule for quantity and dimensions	Vulcan-Hart	Model SG44D
32a	A	Oven/Steamer Combination	Combination-Oven/Steamer: Constructed entirely of stainless steel. Stainless steel door, right hand hinge, with tempered viewing windows. Four function selection switch. Solid state rotary dial thermostat. Fully insulated cooking chamber. Open vented system. Factory installed water pressure regulator, vented drain assembly, and hose and spray assembly. See Equipment Schedule for quantity and dimensions.	Blodgett	Model COS-20G
33	C	Opener, Can	Portable Electric Can Opener: Durable Lexan housing. Replaceable knife and gear. Spring-loaded mechanism. See Equipment Schedule for quantity and dimensions.	Edlund	Model No. 201
34	A	Mixing Machine 56.78 liters	60-Quart Mixer: Hand-operated bowl lift. Nickel-chromed finish. 2 HP fixed speed motor. Direct drive 4-speed transmission. Stainless steel two-piece bowl guard. Attachments and accessories: 9” vegetable slicer. Tray support. Beaters, whips, dough arm. Bowl splash cover. Bowl extension ring. Bowl truck. Colander. Bowl scraper.	Hobart	Model H-600-DT
35	C	Mixing Machine 18.93 liters	20-Quart Bench Type Mixer: ½ HP motor with grease packed ball bearing, ventilated, splash proof enclosure. Positive gear drive with 3 speed operation. Mixer comes with 20-quart stainless steel bowl, one flat “B” beater, one “D” wire loop whip, adjustable tray support, soup strainer/colander, and splash cover.	Hobart	Model A200DT

Equipment Class: A = Contractor Furnished and Installed C = Government Furnished and Installed L = Other, Not In Contract

ITEM CODE		NAME	DESCRIPTION	MAKE	MODEL NUMBER
36	A	Kettle, 151.2 liters	Gas (input 105,000 BTU/hour) Tri-leg Stationary Fully Steam Jacketed 40 gallon capacity Kettle: 3" tapered plug type draw-off valve. 15 psi relief valve, vacuum relief valve, air relief valve, pilot outage automatic shut off, low-water cut off. Double faucet with swing spout and bracket mounted. Accessories: draw-off opening strainer, draw-off tube stainless steel, graduated measuring rod, kettle brushes, kettle paddles and whips.	Vulcan	Model GL40
37	A	Counter, Stainless Steel	Stainless steel work tables shall have no drip countertop edge, square edge flush fit design, and built in drawer. Construction shall be: 14 gauge type 300 stainless steel top, 1 5/8" diameter tubular stainless steel legs with adjustable bullet feet, stainless steel gussets and 18 gauge type 430 stainless steel under shelf. See Equipment Schedule for quantity and dimensions.	TABCO (Tables Mfg. Inc.)	VSS-305
37a	A	Tray Slide	Custom fabricated stainless steel tray slide. See Equipment Schedule for quantity and dimensions.		
38	A	Kettle with Stand	Two 20-Quart Tilting Kettle Modules Self Generating Gas on 36" Base: Kettles to be mounted on cabinet base with stainless steel top, sides, and two hinged front doors with pull handle, 6" high stainless steel adjustable legs, and stainless steel flue back. To have elevated single swing faucet mounted on top of cabinet base. To be N.S.F. and American Gas Association (A.G.A.) design certified. See Equipment Schedule for quantity and dimensions.	Vulcan	2T2036G
38a		NOT USED			
39	A	Hood, Exhaust	See Mechanical drawings for location and dimensions.		
39a	A	Hood, Exhaust	See Mechanical drawings for location and dimensions.		
39b		NOT USED			
40	A	Floor Trough with Grate	Same as Item 12.		
41	A	Hood Washdown System	See Mechanical and Electrical drawings.		

Equipment Class: A = Contractor Furnished and Installed C = Government Furnished and Installed L = Other, Not In Contract

ITEM CODE		NAME	DESCRIPTION	MAKE	MODEL NUMBER
42	**A**	Fry/Filter Station with Food Warmer & Lamp	Deep fryer consists of a fry pot with heat transfer tubes, having a splashdeck and splashback, installed in a cabinet. An automatic temperature control, melt cycle, dual timers, panel of 4 indicating lights, and safety shut off are arranged and designed for the proper frying of food in hot oil. The 20" TS has 4 burners with total input of 136,000 BTU/hour. Central filter is designed to utilize the natural sedimentation of the fryer. Safety switch shuts off fryer prior to filtration process. Prep area: recessed dump station over filter with stainless steel perforated screen comes with 2 LCF infrared heat lamps mounted over prep area.	Keating	Model 20TS GAS
42a	**A**	**Deep Fat Fryer**	**Electric counter deep fat fryer. Fry pot: seamless drawn 18 gauge stainless steel with a cooking capacity of 22 pounds. Splashdeck made of 18 gauge stainless steel. Splashback is mad of 20 gauge stainless steel. Cabinet is made of 18 USS gauge mild steel with an enamel finish. Cabinet presents a stainless steel front with a full width 22 gauge stainless steel door directly under a control panel. The unit has three elements with a total input of 13.5 KW per hour rated at 240 volts. The unit sits on Item C14. See Equipment Schedule for quantity and dimensions**.	**Keating**	**Mover 10x11 TS**
43		NOT USED			
44		NOT USED			
45	A	Water Meters	Automatic water meters: 100 lbs./minute capacity. See Equipment Schedule for quantity and dimensions.	Gemini Bakery Equipment Co.	Stoppil Model A
46	C	Table, Baker's	Stainless steel work tables shall have no drip countertop edge, square edge flush fit design, and 10-1/2" back splash. Construction shall be: 14 gauge type 300 stainless steel top, galvanized understructure; 1 5/8" diameter tubular 16 gauge stainless steel legs, stainless steel gussets and 1" adjustable metal bullet feet. See Equipment Schedule for quantity and dimensions.	TABCO (Tables Mfg. Inc.)	TVKS-245
47	A	Cooker, Steamer	Stainless steel pressureless steamer with twin atmospheric 45,000 BTU/hour firing rate gas steam generators. Two steamer cavities in cabinet base shall be all stainless steel construction. Steamer shall be design certified by the American Gas Association and be NSF listed. Pan capacity: six 12x20x1" pans; three 12x2x2 ½ " pans; two 12x20x4" pans. See Equipment Schedule for quantity and dimensions.	Groen	HY-6G

Equipment Class: A = Contractor Furnished and Installed C = Government Furnished and Installed L = Other, Not In Contract

ITEM CODE		NAME	DESCRIPTION	MAKE	MODEL NUMBER
48	A	Hand Sink with Soap & Towel Dispenser	One piece deep drawn type 304 stainless steel sink bowl. Soap and towel dispenser (7PS-34). See Equipment Schedule for quantity. For sink specifications, see Section 15400, PLUMBING, GENERAL PURPOSE.		
49	C	Ingredient Bin, Mobile	150 pound capacity ingredient bin shall be constructed with heavy gauge stainless steel. Ingredient bin comes with removable left-to-right stainless steel partition (321-3442). See Equipment Schedule for quantity and dimensions.	Seco	Model 47-150
50	A	Pot Sanitizer	Fully-automatic electric pot, pan and utensil washing machine for front loading operation. Heavy gauge stainless steel construction: base, frame, tank, hood, spray arms, doors and standard enclosure panels. 28”x28”x28” wash chamber washes 25 racks per hour. Wash temperature: 150°F. Rinse temperature: 180°F. Unit comes with five each stainless steel 5”x28”x28” pan rack, utility rack, bake sheet rack and basket rack. See Equipment Schedule for quantity and dimensions.	Champion	Model PP-28
50a	A	Table, Drain Board	Custom fabricated stainless steel stainless steel drain board. See Equipment Schedule for quantity and dimensions.		
50b		NOT USED			
51	A	Sink, Pot & Pan	Custom fabricated stainless steel stainless steel pot and pan sink. See Equipment Schedule for quantity and dimensions.		
51a	A	Heater, Booster	15KW booster is factory pre-plumbed and pre-wired with calibrated immersion thermostats and high temperature limit switch. All stainless steel body, base, and adjustable legs. Storage capacity is 16 gallons. Provides rinse water at 151 gallons per hour. See Equipment Schedule for quantity, dimensions, and notes.	Hatco	Model S-15
52	A	Spray, Pre-Rinse	Complete pre-rinse unit includes a mixing faucet for obtaining correct water temperature. Deck type faucet has under-sink spreader with built-in spring checks. Spring action gooseneck comes with built-in backflow preventer. Unit comes with add-on swinging nozzle faucet for dual purpose utility.	T&S Food Service Specialties	Model B-113
53		NOT USED			

Equipment Class: A = Contractor Furnished and Installed C = Government Furnished and Installed L = Other, Not In Contract

ITEM CODE		NAME	DESCRIPTION	MAKE	MODEL NUMBER
54	A	Sink Heater, Booster	Sanitizing sink heater features dual reservoir system. One reservoir contains the heating element. The other reservoir traps and collects soil carried from other sink compartments. Unit shall be furnished complete with valves, temperature gauge and controls. Unit is all stainless steel body and base construction. Unit comes with a temperature monitor indicating when water reaches the sanitizing temperature. Unit is rated at 9KW. See Equipment Schedule for quantity, dimensions, and notes.	Hatco	Model 3CS-9
55	A	Hood, Exhaust	See Mechanical drawings for location and dimensions.		
56	C	Cart, Storage (pot & pan)	Storage Cart: Solid embossed stainless steel shelves. Polyurethane casters. Wheeled casters. See Equipment Schedule for quantity, dimensions, and notes.	Metro	PR48ES
56a	C	Rack, Storage for mixer accessories	Mobile mixer bowl and attachment cart. The removable overhead attachment rack is constructed of two stainless steel vertical tubular posts with top caps; three stainless steel cross members, welded to the vertical posts so as to form a rigid structure; seven 6” long stainless steel pegs welded to each of the two top cross members; and seven pegs welded to the bottom cross member. The assembly fits over the rear uprights. The unit is mounted on four 5” heavy duty, double ball bearing swivel casters with non-marking rubber tires. See Equipment Schedule for quantity, dimensions, and notes.	Servolift Eastern	Model 1005-A
57	A	Cashier Station and Tray Slide	Custom fabricated stainless steel cashier station and tray slide. See Equipment Schedule for quantity, dimensions, and notes.		
57a	A	Cashier Counter	Custom fabricated stainless steel cashier counter. See Equipment Schedule for quantity, dimensions, and notes. See Arch drawings for details.		
58	A	Hot Food Bar (6 pans) with Guard	Solid oak cabinet with laminate panel insets, full undercounter storage with working doors on one side. Laminated countertop, concealed casters. Biztron tray slides, three per side. Oak and glass sneezeguard with fluorescent lighting. See Equipment Schedule for quantity, dimensions, and notes.	Yorkraft	6-Pan Spectrum Salad/Deli Station
59	A	Salad Bar Cold Pan (14) with Soup Station	14 Cold Pans and 1 Hot Pan (soup) Unit: Solid oak cabinet with laminate panel insets, full undercounter storage with working doors on one side. Laminated countertop, concealed casters. Biztron tray slides, three per side. Oak and glass sneezeguard with fluorescent lighting. See Equipment Schedule for quantity, dimensions, and notes.	Yorkraft	Spectrum Salad/Deli Station

Equipment Class: A = Contractor Furnished and Installed C = Government Furnished and Installed L = Other, Not In Contract

ITEM CODE		NAME	DESCRIPTION	MAKE	MODEL NUMBER
60	C	Bread Dispenser	Tempered glass front stainless steel rear-load bread dispenser holds 3 Pulman loaves. See Equipment Schedule for quantity, dimensions, and notes.	Serv-a-Slice Industries	Model A-3
61	C	Butter Dispenser	All stainless steel dispenser with tempered glass front panel. Two stainless steel eutectic cooling units furnished. Five compartment unit holds 2.5 pounds of butter, 225 pats or 180 pats. See Equipment Schedule for quantity, dimensions, and notes.	Serv-a-Slice Industries	5-Compartment Model
62	C	Dispenser, Bread & Butter Plates	Unheated cabinet style mobile dish dispenser. The frame is constructed of all welded heavy gauge steel. The body sides are 20 ga. stainless steel and top is 18 ga. stainless steel. Unit is fitted with model AT adjustable drop-in dish dispensers, wrap-around, non-marking vinyl bumper, and 4" diameter heavy-duty double ball bearing swivel casters with non-marking rubber tires. Each tubular dispenser holds approximately 28-36 bowls or 50-72 plates (5 ¾" to 6 ½ " dish diameter) See Equipment Schedule for quantity, dimensions, and notes.	Servolift Eastern	Model 2AT3-ST
63	A	Salad/Deli Bar Corner Unit	Custom fabricated stainless steel salad/deli bar corner unit. See Equipment Schedule for quantity, dimensions, and notes.		
63a	A	Microwave Oven	1000 watt commercial microwave oven: 1.2 cubic foot stainless steel interior; 9 timer pads; electronic count-down display	Amana	Model RVS10A
64	A	Ice Cream Display Case	Cabinet to have tempered heat reflective glass lids with self-closing feature, interior reflective stainless steel coil guard, protective front bumper guard, front air discharge compressor compartment, semi-hermetic compressor, automatic condensate evaporator, and have automatic defrost gravity evaporator coil. The temperature range will be 0° to -20°F. See Equipment Schedule for quantity, dimensions, and notes.	Master-Bilt	Model GT-50
64a		NOT USED			
65	A	Carving Station	Fully assembled and pre-wired carving cart includes heat lamp, gravy pan and perforated stainless carving plate with meat tongs. Each unit comes with 5" diameter swivel casters, two with brakes. See Equipment Schedule for quantity, dimensions, and notes.	Atlas Metal Industries, Inc.	Model CWGP-2

Equipment Class: A = Contractor Furnished and Installed C = Government Furnished and Installed L = Other, Not In Contract

ITEM CODE		NAME	DESCRIPTION	MAKE	MODEL NUMBER
66	A	Hot Food Well (6 pans)	Six-pan Unit: The wells shall have an inner liner of 18 gauge stainless steel, type 304, grade 18-8. Wells shall be of one piece all welded construction. All corners shall be coved with a minimum of ¼" radius. Insulation shall be 1" minimum thick fiberglass. There shall be a minimum of 850 watts per pan opening. The top shall be of 18 gauge stainless steel die pressed with a raised bead edge around the entire perimeter. See Equipment Schedule for quantity, dimensions, and notes.	Atlas Metal Industries, Inc.	Model L-6-30P
66a	A	Shelf Protector (sneeze guard)	Protector Case with Glass Sneeze Guard & Fluorescent Light Fixtures. All stainless steel construction. Top of 16 gauge stainless steel, uprights of stainless steel square tubing. All welded construction, ground and polished. Glass angled for maximum visibility and sanitary protection	Atlas Metal Industries, Inc.	Model PRC-6
67	A	Counter, Hot/Grill	Custom fabricated stainless steel Hot/Grill counter. See Equipment Schedule for quantity, dimensions, and notes.		
67a		NOT USED			
68	C	Dispenser, Dinner Plates	Unheated cabinet style mobile dish dispenser. The frame is constructed of all welded heavy gauge steel. The body sides are 20 ga. stainless steel and top is 18 ga. stainless steel. Unit is fitted with model AT adjustable drop-in dish dispensers, wrap-around, non-marking vinyl bumper, and 4" diameter heavy-duty double ball bearing swivel casters with non-marking rubber tires. Each tubular dispenser holds approximately 28-36 bowls or 50-72 plates (8 ¼ " to 9 ¼ " diameter). See Equipment Schedule for quantity, dimensions, and notes.	Servolift Eastern	Model 2AT6-ST
69	A	Griddle	Gas griddle consists of a griddle plate, having a drain trough and perimeter installed in a cabinet equipped with gas burners, and the griddle unit comes with a stainless steel stand (item no. 70). Griddle plate is 45"x24"x ¾ ". Gas burners are "H" shaped, atmospheric type with one burner for every 12" of linear plate surface. Each pilot is manually ignited with a piezo igniter. The griddle has a total input of 160,000 BTU's. See Equipment Schedule for quantity, dimensions, and notes.	Keating	Model 48x30
70	A	Grill Stand	Factory fabricated stainless steel stand for Keating 48x30 gas griddle (item no. 69).	Keating	

Equipment Class: A = Contractor Furnished and Installed C = Government Furnished and Installed L = Other, Not In Contract

ITEM CODE		NAME	DESCRIPTION	MAKE	MODEL NUMBER
70a	A	Splash Guard	Custom fabricated stainless steel splash guard. See Equipment Schedule for quantity, dimensions, and notes.		
71	A	Hood Exhaust	See Mechanical drawings for location and dimensions.		
72	A	Hood Washdown System	See Mechanical and Electrical drawings.		
73	A	Cabinet, Food Warming (pass-thru)	Two Section Pass-Thru Warmer: top mounted heating plenum ”plug” design with circulating fans for uniform temperature distribution; humidity relief vent; self-closing doors with lift-off hinges; exterior thermostat control with master on/off control switch; adjustable 6” stainless steel legs; heavy duty, epoxy-coated steel shelves; external digital thermometer; automatic interior lighting. Nominal Net capacity: 52 cubic feet. See Equipment Schedule for quantity, dimensions, and notes.	Continental Refrigerator Hobart	Model DL2WE-SS QSDH2
74	C	Cabinet, Pastry Storage	Enclosed aluminum compound guide cabinets to accommodate forty 18”x26” sheet pans. The cabinet is mounted on four 5” diameter, heavy duty, double ball bearing swivel casters with non-marking rubber tires (two casters are equipped with brakes).	Servolift Eastern	EC72-1826-40
75	A	Counter, Dessert/Condiments	Custom fabricated stainless steel stainless steel dessert/condiment counter. See Equipment Schedule for quantity, dimensions, and notes.		
		Deleted			
		Deleted			
77a	A	Tray Slide	Custom fabricated stainless steel tray slide. See Equipment Schedule for quantity and dimensions.		
78	A	Refrigerator, Roll-thru with Racks	Refrigeration: Air-cooled, hermetically sealed, capillary-type refrigeration system. Cabinet construction: The cabinet front and doors are constructed of heavy gauge polished stainless steel. Cabinet body and doors are insulated witn non-CFC foamed-in-place polyurethane foam. Cabinets are equipped with 6” adjustable stainless steel legs. Shelving:	Continental Refrigerator (Division of National Refrigeration & A/C Products Inc.)	

Equipment Class: A = Contractor Furnished and Installed C = Government Furnished and Installed L = Other, Not In Contract

ITEM CODE		NAME	DESCRIPTION	MAKE	MODEL NUMBER
79	**A**	Toaster	Vertical conveyor bread or bun toaster with a toasting capacity of 16 bread slices per minute.	Hatco	TK-100
80	L	Dispenser, Soda	Leased unit comes ¼ " water line and ½ " drain from drain trough.		
81	**A**	Beverage Counter with Trough	Custom fabricated stainless beverage counter with trough. See Equipment Schedule for quantity and dimensions.		
81a	A	Tray Slide	Custom fabricated stainless steel tray slide. See Equipment Schedule for quantity and dimensions.		
82	L	Fruit Juice Dispenser	Leased unit.		
83	C	Sandwich Unit with Sneeze Guard	Sandwich/Salad Unit: Uses 134A refrigerant. Stainless steel telescoping rll-ack foam insulated cover. Extra wide 8-7/8" full length removable high-density polyethylene cutting board. All stainless steel front, top and sides. Adjustable vinyl-coated wire shelves. Aluminum finished back. 6" adjustable legs. Sneeze Guard: Clear plastic shield with two stainless steel supports. See Equipment Schedule for quantity and dimensions.	True Food Service Equipment, Inc.	Model TSSU-48-18M
84	A	Ice Maker, Dispenser	Countertop Ice Dispenser: 250 lb. ice storage capacity. Exterior cabinet to 20 gauge type 304 stainless steel. Dispenser to be UL and NSF listed.	SerVend International	Model M-250
85	C	Dispenser, Juice	Visual Display Dispenser: Merchandise two different beverages at once. Constant recirculation of beverage keeps drinks chilled and fresh.	Jet Spray	Model JT20
86	A	Counter with Trough	Custom fabricated stainless steel counter with trough. See Equipment Schedule for quantity and dimensions.		
86a	A	Tray Slide	Custom fabricated stainless steel tray slide. See Equipment Schedule for quantity and dimensions.		
87	C	Dispenser, Milk	Refrigerated Milk Dispensers: Three-container storage capacity. Containers accommodates 3 or 5 gallon dispenser cans or 3, 5 or 6 gallon single-service bag and box containers. Temperature indicator in door. Refrigeration is a hermetically sealed copper tube cold wall evaporator system.	Silver King	Model SK-3

Equipment Class: A = Contractor Furnished and Installed C = Government Furnished and Installed L = Other, Not In Contract

ITEM CODE		NAME	DESCRIPTION	MAKE	MODEL NUMBER
88	C	Dispenser, Cup & Glass	Mobile Cup or Glass Rack Dispenser: 20”x20” rack size. Removable stainless steel base panel and push handle. See Equipment Schedule for quantity and dimensions.	Servolift Eastern	Model 42
89	A	Cold Pan 2 Openings	Self-contained pre-charged and wired refrigeration unit designed to use the standard 12”x20” pan. Stainless steel, one piece 18 gauge surface and inner pan furnished with 20” removable divider bars. See Equipment Schedule for quantity and dimensions.	Atlas Metal Industries	Model WCM-2
89a	A	Shelf Protector with Light	Lighted Overshelf Single Service: All stainless steel construction, welded, ground and polished. Uprights constructed of ¾“ stainless steel square tubing. Sneeze guard furnished in ¼” clear plexiglass. Unit is equipped with two lines of fluorescent lights.	Atlas Metal Industries	Model OS-2
90	A	Counter, Stainless Steel	Custom fabricated stainless steel counter. See Equipment Schedule for quantity and dimensions.		
91	A	Floor Trough with Grate	Same as Item 12.		
92	A	Ice Making Machine	Ice Cubed Machine: Regular 30 ice cubes per pound. Air-cooled condenser unit. Ice production 1,025 pounds per 24 hours. Ice machine will include a self-cleaning feature consisting of one 10-minute clean cycle and 6 rinse cycles and a condenser air filter of aluminum mesh. See Equipment Schedule for quantity and dimensions.	Maniowoc	Model BR-1200A
93		NOT USED			
94	A	Rack, Syrup Tank	Aluminum syrup tank racks: The uprights are extruded aluminum channels and the cross bracing are channels and angles fully welded to form a rigid structure. Between the uprights square aluminum tubing is welded horizontally on the rear and sides, to act as retainers for the metal syrup tanks. The uprights are fitted with adjustable bullet feet. Capacity: ten full syrup tanks and fifteen empty tanks. See Equipment Schedule for quantity and dimensions.	Servolift Eastern	Model STR2
		Deleted			

Equipment Class: A = Contractor Furnished and Installed C = Government Furnished and Installed L = Other, Not In Contract

ITEM CODE		NAME	DESCRIPTION	MAKE	MODEL NUMBER
96		**Coffee Urn**	**Twin automatic coffee urns, 6 gals. Each liner. Fresh water brewing using heat exchange system. Electric service. All controls to be located in recessed base of urn and to operate on 120 VAC. All ANSI 304 18-8 stainless steel construction. To include positive low water cutoff system. Automatic refill, drain valve in bottom with hose connection, fill faucets, UL listed, NSF approved**.	**Grindmaster**	**Mover 8106**
		Deleted			
97a	A	Tray Slide	Custom fabricated stainless steel tray slide. See Equipment Schedule for quantity and dimensions.		
98	A	Rack, Condiment Packs (9 bins)	Rack with 9 bins. See Equipment Schedule for quantity and dimensions.	Cambro	Model 9R9
99	L	Cappuccino Machine	Leased item.		
100	A	Tray Slide	Custom fabricated stainless steel tray slide. See Equipment Schedule for quantity and dimensions.		
101	A	Soft Serve Machine	Air-Cooled Soft Serve Machine: Hopper style freezer. 2 individual flavors or an equal combination of both for a twist effect. Design incorporates microprocessor based control system programmed to regulate all necessary modes of operation. Two 3.4 quart volume freezing cylinders. Two 20 quart capacity hoppers.	Taylor	Model 754/8754
102	A	Conveyor with Soiled Tray Table	Custom fabricated stainless steel conveyor with soiled tray table. See Equipment Schedule for quantity and dimensions.		
103	A	Dish Table, Soiled with Trough	Custom fabricated stainless steel soiled dish table with trough. See Equipment Schedule for quantity and dimensions.		
104	A	Dishwashing Machine	Three-tank straight through operation. Each tank has a separate scrapper, wash and rinse tank with a final rinse. Each tank independently sprays 185-300 gallons per minute of concentrated recirculated water over the ware. Processes 247 to 38 racks per hour. High temperature final rinse distributes 3.76 to 4.53 gallons per minute of 180° F water over ware. See Equipment Schedule for quantity and dimensions. W/2 vent hood connections and single point, electrical connection for dishwasher only. Table limit switches.	The Stero Company Hobart	Model SCT-120S Model CPW 124A

Equipment Class: A = Contractor Furnished and Installed C = Government Furnished and Installed L = Other, Not In Contract

ITEM CODE		NAME	DESCRIPTION	MAKE	MODEL NUMBER
104a	A	Booster Heater	45KW booster is factory pre-plumbed and pre-wired with calibrated immersion thermostats and high temperature limit switch. All stainless steel body, base, and adjustable legs. Storage capacity is 16 gallons. Provides rinse water at 452 gallons per hour. See Equipment Schedule for quantity, dimensions, and notes.	Hatco	Model S-45
105	A	Waste Pulping Extractor	See Mechanical Dwgs for details.	Hobart	Model W59
106	C	Dolly	Cup or Glass rack dolly for 20”x20” rack size. Unit with 14 gauge stainless steel platform and 16 gauge tubular handle. The units are mounted on four 4” diameter heavy-duty, double ball bearing swivel casters with non-marking rubber tires (2 casters with brakes). See Equipment Schedule for quantity, dimensions, and notes.	Servolift Eastern	Model 750-1
107	A	Duct Set	See Mechanical Dwgs for details.		
108	C	Sink, Silver Soak	Mobile undercounter soak sink. The heavy-duty undercounter soak sink is designed to fit under most counters that allows silverware or similar products to be placed into for soaking purposes. The heavy gauge one piece seamless die drawn sink is sloped toward the center and fitted with a lever handle drain. The sink bowl is mounted on four legs with non-marking rubber tires. See Equipment Schedule for quantity, dimensions, and notes.	Seco	Model 3474
		Not Used		.	
110	A	Dish Table, Clean	Custom fabricated stainless steel clean dish table. See Equipment Schedule for quantity and dimensions.		
111	A	Conveyor with Soiled Tray Table	Custom fabricated stainless steel soiled dish table with conveyor. See Equipment Schedule for quantity and dimensions.		
112	A	Spray Assembly	Complete spray assembly unit includes a mixing faucet for obtaining correct water temperature. Deck type faucet has under-sink spreader with built-in spring checks. Spring action gooseneck comes with built-in backflow preventer. See Equipment Schedule for quantity and dimensions.	T&S Food Service Specialties	Model B-113

Equipment Class: A = Contractor Furnished and Installed C = Government Furnished and Installed L = Other, Not In Contract

ITEM CODE		NAME	DESCRIPTION	MAKE	MODEL NUMBER
113	C	Clean/Sanitizing Machine	Portable high pressure cleaning system. Two 5 gallon heavy gauge polyethylene detergent tanks. Direct drive, positive displacement twin piston pump with factory grease packed crankcase for 180° F water temperatures. Pressures to 600 psi. Water pressure regulator assures precise detergent ratio and prevents excess pressure on pump inlet valves. All fittings in fluid system brass or stainless steel. See Equipment Schedule for quantity and dimensions.	Sage Systems, Inc.	Model 120
114	C	Dispenser, Bowl with Cover	One compartment dish cart with doors and cover. The frame is constructed of stainless steel tubing with integrally welded cross rails for rigidity. The cabinet is constructed of all-welded 18 gauge stainless steel, with all edges flanged for rigidity. The unit is mounted on four 4" diameter double bearing swivel casters. Approximate dish storage capacities: 10" diameter (288-324 plates); 7" diameter (576-648 plates); 5" diameter (1152-1296 plates). See Equipment Schedule for quantity and dimensions.	Servolift Eastern	Model D411
115	A	Wall Mounted Sorting Shelf	Dual purpose open tubular design, wall mounted open style rack shell with solid end brackets. TIG-welded construction with exposed areas blended to a #3 satin finish. 14 gauge type 300 series stainless steel brackets. 1-5/8 " 18 gauge stainless steel tubing. Shelf sized for standard 20" rack. See Equipment Schedule for quantity and dimensions.	Advance food Service Equipment, Inc.	Model DT-6R-02
116	A	Wall Mounted Flat Shelf	Shelf provides a landing ledge for clean dishware. The dish rest is ideal for the accumulation and sorting of clean ware prior to being placed in their respective return carts. The shelf is fabricated from 12 gauge stainless steel . The total ledge protrusion is 11 ¾". See Equipment Schedule for quantity and dimensions.		
117	C	Dispenser, Tray	Cantilever Style, Mobile Tray and Silverware Dispenser: The body and sides are 20 gauge stainless steel. The top is fitted with a stainless steel sloped overhead-type silverware dispenser, enclosed on all four sides, and provided with eight openings for insertion of stainless steel cylinders. The unit is mounted on four double ball bearing swivel casters (2 casters with brakes). The tray carrier is constructed of all-welded 16 gauge stainless steel and the tray size is 15 ¼" x 20 ½". See Equipment Schedule for quantity and dimensions.	Servolift Eastern	Model TCA-ST-OSW8
118	L	Bread Rack	Leased item.		

Equipment Class: A = Contractor Furnished and Installed C = Government Furnished and Installed L = Other, Not In Contract

ITEM CODE		NAME	DESCRIPTION	MAKE	MODEL NUMBER
119	C	Proofing Cabinet	Non-insulated Proofing Cabinet: Formed and welded .100 aluminum top, .190 aluminum base. Extruded aluminum angles for (17) 18”x26” pans, riveted on 3” centers. Field reversible Lexan door. Removable 1000 watt, 120V power unit. Load capacity 200 lbs. Each. See Equipment Schedule for quantity and dimensions.	Cres Cor	Model 121-1816B
120	A	Refrigerator Display	Self-contained Glass Door Merchandiser: 1/3 HP compressor. 26 cubic feet capacity. Four wire shelves. Plug-in installation. 25 11/16” x 24” shelf size. See Equipment Schedule for quantity and dimensions.	True Food Service Equipment, Inc.	Model GDM-26
121	A	Electronic Menu Board	Custom fabricated menu board.		
122	A	Chute Hot Sandwich	Dual horizontal shelf sandwich display warmers are designed to hold hot wrapped sandwiches. The unit is made of extruded aluminum and sturdy stainless steel with tempered glass end panels. Incandescent lights illuminate the food holding area. See Equipment Schedule for quantity and dimensions.	Hatco	Model GRSDH-41D
123	C	Pizza Warmer	Food Holding and Display Cabinet: Tempered glass sides and incandescent lighting to enhance food appeal. Cabinet opening: 18 ¾” W x 22” H. See Equipment Schedule for quantity and dimensions.	Hatco	Model FST-1X
124	C	Cheese Warmer	3-1/2 quart warmer with pump maintains pre-warmed cheese at the proper serving temperature. See Equipment Schedule for quantity and dimensions.	Hubert	Stock No. 33287
125	A	Nachos Warmer	Holding and display cabinet is for warming and displaying nacho chips. Holds up to 40 lbs. Built of stainless steel and aluminum with tempered glass sides and doors. See Equipment Schedule for quantity and dimensions.	Hatco	Model FST-1-MN
126	C	Hot Dog Station with Warmer	Capacity: 130 dogs; 30-40 buns. See Equipment Schedule for quantity and dimensions.	Star Manufacturing International, Inc.	Model 35SS
127	C	Donut/Pastry Display	GFGI item.		
128	A	Stand, Stainless Steel	Custom fabricated stainless steel stand. See Equipment Schedule for quantity and dimensions.		
129	A	Stand, Stainless Steel	Custom fabricated stainless steel stand. See Equipment Schedule for quantity and dimensions.		

Equipment Class: A = Contractor Furnished and Installed C = Government Furnished and Installed L = Other, Not In Contract

ITEM CODE		NAME	DESCRIPTION	MAKE	MODEL NUMBER
129**a**	A	Tray Slide	Custom fabricated stainless steel tray slide. See Equipment Schedule for quantity and dimensions.		
130	A	Stand, Stainless Steel	Custom fabricated stainless steel stand. See Equipment Schedule for quantity and dimensions.		
131	A	Cold Food Table with Slide & Guard	Top: Top trim shall be heavy gauge 300 series stainless steel, flanged down into a stainless steel cold pan liner. Body: Unit shall have a fully enclosed body formed from heavy gauge cold-rolled paint grip steel. Unit shall be mounted on 5” diameter casters, two with brakes. Mechanical cold pan: To be heavy gauge stainless steel, coved corner construction. Unit shall be insulated on four sides with 2” styrene and on bottom with 1” urethane. Refrigeration: Equipped with refrigerant coil, condensing unit, controls and electric cord and plug. Compressor compartment has removable stainless steel louvered grill located at one end of salad bar. Canopy: A one-piece clear plexiglass canopy shall be mounted on brackets. Specially sized stainless steel and simulated marble adapter panels. Formica Brand laminate body finishes. 3 bar tray slide. Flourescent lights beneath canopy. See Equipment Schedule for quantity and dimensions.	Duke Manufacturing Co.	Model AHC-5M
132	A	Hood, Exhaust	See Mechanical drawings for location and dimensions.		
133	A	Hot Pan 3 Holes	Three-well hot food module. See Equipment Schedule for quantity and dimensions.	Galley	Model 9031
134	A	Cold Pan 3 Holes	Three-well cold food module, 5” deep refrigerated pan. See Equipment Schedule for quantity and dimensions.	Galley	Model 9230
135	A	Cold Pan 5Holes	Five-well cold food module, 5” deep refrigerated pan. See Equipment Schedule for quantity and dimensions.	Galley	Model 9250

Equipment Class: A = Contractor Furnished and Installed C = Government Furnished and Installed L = Other, Not In Contract

ITEM CODE		NAME	DESCRIPTION	MAKE	MODEL NUMBER
136	A	Cook Hold	Electric Cooking and holding oven: Two separately controlled oven compartments enclosed in one exterior cabinet. Exterior of 22 gauge stainless steel. Two 18 gauge, non-magnetic stainless steel doors with magnetic door latch and viewing window. Four non-magnetic stainless steel side racks. Six non-magnetic stainless steel wire shelves. Two non-magnetic stainless steel drip pans. The unit is mounted on four 5" heavy duty casters; 2 with brakes. See Equipment Schedule for quantity and dimensions.	Halo Heat Systems by Alto-Shaam	Model 1000-TH-I/HD/D
137		**Quick Chiller Refrigerator**	**Quick-chiller w/roll-in cart. Approx 240 lbs (109kg) max. Chilling capacity, 20 GAGE Non-Magnetic (Non-Corrosive) stainless steel. Fully insulated with high density polyurethane form. Inside dimensions (WxDxH), 38" x 30-1/2"x 61" one (1) roll-in cart (trolley) item 5815. Ten (10) stainless steel wire shelves, furnish w/self contained dual refrigeration system, fully insulated stainless steel door w/magnetic gasket for an air tight seal.**	**Alto-Shaam**	**QC-100**
138	A	Dock Leveler			
139	**A**	**Sneeze Guard w/ Light, Single Service**	**Lighted overshelf, single service. All stainless steel construction, welded, ground and polished, uprights constructed of ¾" stainless steel tubing. Sneeze guard furnished in ¼" clear Plexiglas. Unit is equipped with two lines of fluorescent lights.**	**Atlas Metal Industries**	**OS-5**
139a	**A**	**Sneeze Guard w/ Light, Dual Service**	**Lighted over shelf, dual service. All other features same as item No. 139.**	**Atlas Metal Industries**	**OSD-6**

Equipment Class: A = Contractor Furnished and Installed C = Government Furnished and Installed L = Other, Not In Contract

ITEM CODE		NAME	DESCRIPTION	MAKE	MODEL NUMBER
C1	A	Hand Sink, Stainless Steel	One piece deep drawn type 304 stainless steel sink bowl (10”x14”x5”). Soap and towel dispenser (7PS-34). See Equipment Schedule for quantity and dimensions.	Advance Tabco	7-PS-50
C2	C	Dunnage Shelving, Mobile	Aeroform shelf is press formed from a single sheet of 18 ga stainless steel. Each inside corner is fitted with an extruded aluminum bracket to accommodate an upright. The uprights are 1” O.D. stainless steel fitted with top caps and adjustable sanitary bullet foot. See Equipment Schedule for quantity and dimensions.	Servolift Eastern	80-A5
C3		NOT USED			
C4	A	Warmer, Reach In	Double compartment holding cabinet with 18 gauge stainless steel exterior casing and two (2) 18 gauge stainless steel doors. Each compartment is separately controlled. The cabinet includes two ON/OFF adjustable thermostats, 60° to 200°F; two indicator lights; and two holding temperature gauges to monitor inside air temperature. Each compartment is equipped with one water reservoir pan with a perforated cover, and four sets of stainless steel universal angle pan supports. Pan supports in each compartment are adjustable in fourteen positions. Each cabinet includes one set of 5” heavy duty casters, two rigid and two swivel with brake. See Equipment Schedule for quantity and dimensions.	Halo Heat Systems by Alto-Shaam	Model 1000-UP/VSI/HD
C5	A	Overshelf	Wall-mounted Shelf: Manufactured of 18 gauge stainless steel, supported by 14 gauge stainless steel brackets. Maximum weight per shelf is 200 pounds. See Equipment Schedule for quantity and dimensions.	Duke	Model MSD-2424
C6	A	Conveyor Toaster	Same as Item No. 79.		
C7	A	Table/Equipment Stand	Custom fabricated stainless steel Table/Equipment stand. See Equipment Schedule for quantity and dimensions.		
C8	A	Equipment Stand	Custom fabricated stainless steel Table/Equipment stand. See Equipment Schedule for quantity and dimensions.		
C9	A	Food Warmer	Portable Food Warmer: Unit has thermo-controlled base that conducts heat from the bottom while an infrared element heats from above. A swing-away top provides fast and easy access to food pans. Clearance between heated base	Hatco	GR-FFB

Equipment Class: A = Contractor Furnished and Installed C = Government Furnished and Installed L = Other, Not In Contract

ITEM CODE		NAME	DESCRIPTION	MAKE	MODEL NUMBER
			and upper housing is 16”. Unit comes with food holding pans, wire trivet, and chrome pan rail.		
C10	A	Hood, Exhaust	See Mechanical Dwgs for details.		
C11	A	Hood Washdown System	See Mechanical Dwgs for details.		
C12	A	Deep Fat Fryer	Electric counter deep fat fryer. Fry pot: seamless drawn 18 gauge stainless steel with a cooking capacity of 22 pounds. Splashdeck made of 18 gauge stainless steel. Splashback is mad of 20 gauge stainless steel. Cabinet is made of 18 USS gauge mild steel with an enamel finish. Cabinet presents a stainless steel front with a full width 22 gauge stainless steel door directly under a control panel. The unit has three elements with a total input of 13.5 KW per hour rated at 240 volts. The unit sits on Item C14. See Equipment Schedule for quantity and dimensions.	Keating	Model 10x11 TS
C13	A	Top/Bottom Grill	Top-Side Cooker consists of cooking platen with an electrical control, electrical elements, NSF approved removable cooking sheet and a cool to the touch handle. The top side cooker is mounted on a Keating 48x30 gas griddle with griddle stand (Item C-14). Platen: 10-1/2” wide by 20” deep by 3/8” thick surface. Top-side cooker electrical specifications: 4KW AND 18 amps single phase at 220 VAC. Gas griddle consists of a griddle plate, having a drain trough and perimeter installed in a cabinet equipped with gas burners, and the griddle unit comes with a stainless steel stand (item no. 70). Griddle plate is 45”x24”x ¾ “. Gas burners are “H” shaped, atmospheric type with one burner for every 12” of linear plate surface. Each pilot is manually ignited with a piezo igniter. The griddle has a total input of 160,000 BTU’s. See Equipment Schedule for quantity, dimensions, and notes.	Keating	Top-side cooker & 48x30 gas griddle with stand
C14	A	Undercounter Refrigerator	Griddle Stand Refrigerator for Item C12 and C13. Features: stainless steel exterior and interior; plasticized fin evaporator coil; digital thermometer; anti-sweat drawer heaters; chrome-plated hardware; heavy gauge, reinforced stainless steel work top with drip-guard edge; stainless steel pans; self-closing drawers; adjustable stainless steel 6” legs. Refrigeration: 1/5 HP condensing unit; 1725 BTU/hour capacity. See Equipment Schedule for quantity, dimensions, and notes.	Continental Refrigerator	Model DL1G-SS

Equipment Class: A = Contractor Furnished and Installed C = Government Furnished and Installed L = Other, Not In Contract

ITEM CODE		NAME	DESCRIPTION	MAKE	MODEL NUMBER
C15	A	Microwave Oven	1000 watt commercial microwave oven: 1.2 cubic foot stainless steel interior; 9 timer pads; electronic count-down display	Amana	Model RVS10A
C16	A	Front Counter	Custom fabricated stainless steel front counter. See Equipment Schedule for quantity and dimensions.		
C17	A	Sandwich Refrigerator	Sandwich/Salad Unit: All stainless steel front, top and sides; 2 adjustable vinyl coated wire shelves; adjustable 6" legs; full length removable cutting board; 6.5 cubic feet capacity; 1/3 HP compressor. See Equipment Schedule for quantity and dimensions.	True Food Service Equipment, Inc.	Model TSSU-27-8
C17a	A	Serving Unit, Heated (2 wells)	Heated mobile modular serving unit for two well tray make-up system: Each well is thermostatically controlled and temperature adjustment knobs provide individual well temperatures between 80 and 200 degrees fahrenheit. Unit is mounted on heavy duty casters, two with brakes. See Equipment Schedule for quantity and dimensions.	Carter-Hoffman Corporation	Model CC-232
C18	A	Hot Dog/Pizza Counter	Custom fabricated stainless hot dog/pizza counter. See Equipment Schedule for quantity and dimensions.		
C19	A	Hot Dog Roller Grill	Roller grill (model 25) with sneeze guard (model 25SG) stacked on drawer type bun warmer (model SST-25): 27 hot dogs per load; 10 rollers; 2 motors. Bun warmer: stainless steel cabinet; thermostat control; stainless steel drawer slides; indicating light; stainless steel removable bun pan; 3-1/2 dozen bun capacity. See Equipment Schedule for quantity and dimensions.	Star Manufacturing Company	Models 25, 25SG & SST-25.
C20	A	Breath Protector (lighted)	Custom fabricated stainless breath protector counter. See Equipment Schedule for quantity and dimensions.		
C21	C	Tray Dispenser	Cantilever Style, Mobile Tray and Silverware Dispenser: The body and sides are 20 gauge stainless steel. The top is fitted with a stainless steel sloped overhead-type silverware dispenser, enclosed on all four sides, and provided with eight openings for insertion of stainless steel cylinders. The unit is mounted on four double ball bearing swivel casters (2 casters with brakes). The tray carrier is constructed of all-welded 16 gauge stainless steel and the tray size is 14" x 18". See Equipment Schedule for quantity and dimensions.	Servolift Eastern	Model TCA-ST-OSW8

Equipment Class: A = Contractor Furnished and Installed C = Government Furnished and Installed L = Other, Not In Contract

ITEM CODE		NAME	DESCRIPTION	MAKE	MODEL NUMBER
C22	A	Display Refrigerator	Drop-in self contained refrigerated display case installed on custom fabricated beverage counter. Self-contained units require a cutout and drop-in space for the ½ HP compressor-condenser housing extension. Unit comes with self-closing sliding thermopane tempered glass doors. Exteriors are constructed of stainless steel. 18.0 cubic feet capacity & 20.8 square feet shelving space. See Equipment Schedule for quantity and dimensions.	Delfield	Model 5248-S
C23	A	Cup/Lid Dispenser	Four gravity fed cup storage tubes dispenser. Cup dispenser top with compartments for condiment storage as we as storage for lids, straws and napkins. Removable plastic top. See Equipment Schedule for quantity and dimensions.	SerVend	Model CD4A-T
C24	A	Ice Machine/Dispenser	Countertop Ice Dispenser: 150 lb. ice storage capacity. Exterior cabinet to 20 gauge type 304 stainless steel. Dispenser to be UL and NSF listed. Unit comes with water dispenser. See Equipment Schedule for quantity and dimensions.	SerVend International	Model M-150
C24a	L	Soda Dispenser	Leased Item		
C25	A	Coffee Urn (3 gallon)	Dual wall fiberglass insulated 3-gallon coffee urn: 375 five ounce cups per hour brewing rate. See Equipment Schedule for quantity and dimensions.	American Beverage Systems	Model 8113
C26	A	Rack, Condiment (9 bins)	Same as item 98.		
C27	A	Beverage Counter with Trough	Custom fabricated stainless beverage counter with trough See Equipment Schedule for quantity and dimensions.		
C28	A	Wrapping Station	Custom fabricated stainless wrapping staion. See Equipment Schedule for quantity and dimensions.		
C29	A	Overshelf	Same as item C5.		
C30	A	Reach-in Refrigerator	Self-contained Refrigerator: Exterior cabinet including front, sides, doors and louver, and rails of heavy gauge stainless steel with #4 finish. Cabinet interior and door liners of stainless steel. 6” stainless steel adjustable legs. Nominal 40.8 net cubic feet capacity. 1/3 HP compressor. 2540 BTU per hour. See Equipment Schedule for quantity and dimensions.	Traulsen Hobart	Model RHT 2-26 W UT Model SQS2

Equipment Class: A = Contractor Furnished and Installed C = Government Furnished and Installed L = Other, Not In Contract

ITEM CODE		NAME	DESCRIPTION	MAKE	MODEL NUMBER
C31	A	Reach-in Frozen food Cabinet	Same as item 31.		
C32	A	Tray Slide	Custom fabricated stainless steel tray slide. See Equipment Schedule for quantity and dimensions.		
C33	A	Refrigerator	Self-contained reach-in refrigerator: 19.1 net cubic capacity. ¼ HP compressor. 2030 BTU per hour. Three shelves: 14.6 square feet shelf area. See Equipment Schedule for quantity and dimensions.	Traulsen Hobart	Model RHT 1-26 W UT Model SQS1
C34	C	Point of Sale Station	Government Furnished/Government Installed Item		
C35		NOT USED			
C36	C	Pizza Warmer	Government Furnished/Government Installed Item		
C37	C	Pastry Display	Government Furnished/Government Installed Item		
C38	A	Tray Slide	Custom fabricated stainless steel tray slide. See Equipment Schedule for quantity and dimensions.		

Equipment Class: A = Contractor Furnished and Installed C = Government Furnished and Installed L = Other, Not In Contract

SECTION TABLE OF CONTENTS

DIVISION 12 - FURNISHINGS

SECTION 12490

WINDOW TREATMENT

PART 1 WORK DESCRIPTION

1.1 REFERENCES
1.2 GENERAL
1.3 SUBMITTALS
1.4 DELIVERY, STORAGE, AND HANDLING
1.5 FIELD MEASUREMENTS
1.6 WARRANTY

PART 2 PRODUCTS

2.1 WINDOW BLINDS
2.1.1 Horizontal Blinds
2.1.1.1 Head Channel and Slats
2.1.1.2 Controls
2.1.1.3 Intermediate Brackets
2.1.2 Vertical Blinds
2.1.2.1 Louvers
2.1.2.2 Carriers
2.1.2.3 Headrail System
2.1.2.4 Controls
2.1.2.5 Connectors and Spacers
2.1.2.6 Intermediate Brackets
2.2 WINDOW SHADES
2.2.1 Light Filtering Shades
2.2.2 Room Darkening Shades
2.3 COLOR
2.4 WINDOW BLACKOUT DRAPERIES
2.4.1 Fabric
2.4.1.1 Flame Resistance
2.4.2 Sewing Thread
2.4.3 Heading
2.4.3.1 Heading Hooks
2.4.4 Drapery Hardware
2.4.4.1 Rod Sets
2.4.4.2 Traverse Cord
2.4.5 Fasteners
2.4.6 Fabrication
2.4.6.1 Drapery Fabrication

PART 3 EXECUTION

3.1 WINDOW TREATMENT PLACEMENT
3.2 INSTALLATION
3.2.1 Window Blackout Draperies

-- End of Section Table of Contents --

SECTION 12490

WINDOW TREATMENT

PART 1 WORK DESCRIPTION

1.1 REFERENCES

The publications listed below form a part of this specification to the extent referenced. The publications are referred to in the text by basic designation only.

FEDERAL SPECIFICATIONS (FS)

FS AA-V-00200	(Rev B) Venetian Blinds

NATIONAL FIRE PROTECTION (NFPA)

NFPA 701	(1996) Methods of Fire Tests for Flame-Resistant Textiles and Films

1.2 GENERAL

Window treatment shall be provided, complete with necessary brackets, fittings, and hardware. Each window treatment type shall be a complete unit provided in accordance with paragraph WINDOW TREATMENT PLACEMENT. Equipment shall be mounted and operated as indicated. Windows to receive a treatment shall be completely covered. The Contractor shall take measurements at the building and shall be responsible for the proper fitting and hanging of the equipment.

1.3 SUBMITTALS

Government approval is required for submittals with a "GA" designation; submittals having an "FIO" designation are for information only. The following shall be submitted in accordance with Section 01330 SUBMITTAL PROCEDURES:

SD-01 Data

Window Treatments and Hardware; FIO.

Manufacturer's data composed of catalog cuts, brochures, product information, and maintenance instructions.

SD-04 Drawings

Window Treatments and Hardware; FIO.

Drawings showing fabrication and installation details. Drawings shall show layout and locations of track, direction of draw, mounting heights, and details.

SD-14 Samples

Window Treatments and Hardware; FIO.

Three samples of each type and color of window treatment. Blind slats or louvers shall be 150 mm in length for each color. Track shall be 150 mm in length. Shade material shall be minimum 150 x 150 mm in size.

1.4 DELIVERY, STORAGE, AND HANDLING

Components shall be delivered to the jobsite in the manufacturer's original packaging with the brand or company name, item identification, and project reference clearly marked. Components shall be stored in a dry location that is adequately ventilated and free from dust, water, or other contaminants and shall have easy access for inspection and handling. Materials shall be stored flat in a clean dry area.

1.5 FIELD MEASUREMENTS

The Contractor shall become familiar with details of the work, verify dimensions in the field, and shall advise the Contracting Officer of any discrepancy before performing the work.

1.6 WARRANTY

Manufacturer's standard performance guarantees or warranties that extend beyond a 1 year period shall be provided.

PART 2 PRODUCTS

2.1 WINDOW BLINDS

Each blind, including hardware, accessory items, mounting brackets and fastenings, shall be provided as a complete unit produced by one manufacturer. All parts shall be one color unless otherwise shown, and match the color of the blind slat. Steel features shall be treated for corrosion resistance.

2.1.1 Horizontal Blinds

Horizontal blinds shall conform to FS AA-V-00200, Type II (25 mm (1 inch) slats), except as modified below. Blind units shall be capable of nominally 180 degree partial tilting operation and full-height raising. Blinds shall be inside mount as shown.

2.1.1.1 Head Channel and Slats

Head channel shall be steel or aluminum nominal 0.61 mm for Type II. Slats shall be aluminum, not less than 0.203 mm thick, and of sufficient strength to prevent sag or bow in the finished blind. A sufficient amount of slats shall be provided to assure proper control, uniform spacing, and adequate overlap.

2.1.1.2 Controls

The slats shall be tilted by a transparent tilting wand, hung vertically by its own weight, and shall swivel for easy operation. The tilter control shall be of enclosed construction. Moving parts and mechanical drive shall be made of compatible materials which do not require lubrication during normal expected life. The tilter shall tilt the slats to any desired angle and hold them at that angle so that any vibration or movement of ladders

and slats will not drive the tilter and change the angle of slats. A mechanism shall be included to prevent over tightening. The wand shall be of sufficient length to reach to within 1500 mm of the floor.

2.1.1.3 Intermediate Brackets

Intermediate brackets shall be provided for installation of blinds over 1200 mm wide and shall be installed as recommended by the manufacturer.

2.1.2 Vertical Blinds

Vertical blind units shall be capable of nominally 180 degree partial tilting operation and full stackback. The blinds shall be listed by the manufacturer as designed for heavy duty strength applications including heavy duty hardware. Vertical blinds shall be mounted with inside brackets as shown. Blinds shall be sill length.

2.1.2.1 Louvers

Solid vinyl louvers shall be fire resistant, UV stable, impact resistant, and shall not emit corrosive fumes in a fire. Louvers shall have a bottom chain unless indicated otherwise.

2.1.2.2 Carriers

Carriers shall be provided to support each louver. Carriers shall be of molded plastic and shall transverse on self-fabricated wheels for smooth, easy operation. The hook of the carrier shall have an automatic latch to permit easy installation and removing of the louver, and shall securely lock the louver for tilting and traversing.

2.1.2.3 Headrail System

Headrail system shall be not less than 1.19 mm thickness and shall be made of anodized aluminum alloy or 0.635 mm thick phosphate treated steel with a baked on ivory gloss enamel paint finish. The headrail shall extend the full width of the blind and each end shall be closed with an end cap. One cap shall contain the traversing and tilting controls. The opposite cap shall house the pulley for the traversing cord.

2.1.2.4 Controls

Tilting control and traversing controls shall hang compactly at the side of the blinds as indicated and shall reach within 1500 mm of the floor. The tilt/traverse control baton shall tilt all vanes simultaneously to any desired angle and hold them at that angle. The louvers shall traverse one way stacked position at the control side of the blinds. The traversing control cord shall be minimum 1.78 mm in diameter with a minimum breaking strength of 556 N. The cord shall be anchored to a lead carrier which shall be linked to all adjacent carriers. The louvers shall be traversed along the headrail by pulling one side of the looped cord. A weighted pulley shall be provided at the bottom of the cord or a fiberglass wand shall tilt the louvers by turning the wand and shall traverse the louvers by using the wand as a drapery baton.

2.1.2.5 Connectors and Spacers

The connector shall be flexible, smooth and flat to slide unhindered when carriers move independently of each other, and to nest compactly when

carriers are stacking. The length of the links shall relate to the louver width in order to equally space the traversing louvers, to maintain uniform and adequate overlap of louvers, and to fully cover the width of the opening.

2.1.2.6 Intermediate Brackets

Intermediate installation brackets shall be furnished for blinds over 1575 mm wide.

2.2 WINDOW SHADES

Roller tube shall operate smoothly and be of sufficient diameter and thickness to prevent excessive deflection. Brackets shall be provided that are appropriate for inside, outside, ceiling mount as indicated. The shade cloth shall meet the performance described in NFPA 701, small scale test. Steel features shall be treated for corrosion resistance.

2.2.1 Light Filtering Shades

Light filtering shades shall conform to the following: Roller tube shall be wood, steel and shall operate by spring, clutch and bead operation mechanism. Fascia mounting brackets shall be steel to support roller tube and fascia panel. The fascia panel shall be channel shaped extruded aluminum with standard enamel finish. The shade shall be made from a single piece of pvc coated fiberglass cloth.

2.2.2 Room Darkening Shades

Room darkening (black-out) window shades shall conform to the following: Roller tube shall be aluminum and shall be controlled by webbing tape, crank operated gear box with steel rods. Light traps shall be shop fabricated, and shall consist of a head box to house the shade roller, and U-shaped channels to serve as guides for the shade along the sides and to receive the bottom edge of the shade along the sill. Light trap shall be made of sheet steel having a minimum thickness of 0.85 mm (22 gauge)or anodized, extruded, aluminum. The legs of the channels shall be not less than 44 mm long and separated by the minimum distance that will permit free operation of the shade. Edges of light trap coming into contact with the shade cloth shall be smooth pile light seal. The exposed face of the head box shall be hinged or removable for access to the shade roller. The interior or unexposed surfaces of the light trap shall have a finish coat of flat black enamel. The exposed portions of the light trap shall have a factory-applied priming coat of gray paint. Finish painting is specified in Section 09900 PAINTING, GENERAL; anodized bronze or clear finish as shown. Shade roller shall be manufacturer's standard product. Cloth shall be of type for blackout purposes. The shade shall be made from a single piece of canvas duck cloth laminated to vinyl. When not finished with a selvage, the vertical edges of the shade shall be bound or hemmed using a high-grade thread. Needle holes shall be made lightproof by applying a suitable filler. The bottom edge of the shade shall be fitted with a steel operating bar. Shades will engage positively with bottom rail through operating bar or chain pull. Bars shall be painted with flat black enamel. Pull cords shall be made of No. 4 braided nylon or beaded chain having not less than 335 N breaking strength.

2.3 COLOR

Color shall be as indicated on the drawings.

2.4 WINDOW BLACKOUT DRAPERIES

2.4.1 Fabric

As indicated.

2.4.1.1 Flame Resistance

NFPA 701. Drapery fabric and lining shall pass the small scale test. Treatment to enhance flame resistance shall be permanent type. If treated, fabric shall pass the small scale test after being subjected to the accelerated dry cleaning or laundering cycles specified in NFPA 701.

2.4.2 Sewing Thread

Pre-shrunk mercerized cotton (50/3) or monofilament in equivalent size, except do not use monofilament in the heading.

2.4.3 Heading

2.4.3.1 Heading Hooks

Slip-in-type, bright zinc-plated, chromium-plated, or nickel-plated steel, and of a size adequate to hold the heading upright. Provide one hook for each pleat.

2.4.4 Drapery Hardware

Traverse wall-mounted rods of heavy-duty type. Traverse rods or tracks shall be manually operated, center close two-way. Rods and tracks shall be cold-rolled, commercial quality steel minimum 0.75 mm thick or extruded aluminum minimum 1.27 mm thick. Rod and track cross section width and depth shall be sufficient to carry the drapery without sagging. Track configuration (number of channels) shall be such so as to permit drapery operation as specified or indicated. Finish steel components with a white baked enamel, vinyl, or epoxy coating as standard with the manufacturer. Finish aluminum components with an anodic a baked enamel, vinyl, or epoxy coating as standard with the manufacturer. Provide smooth and non-sticking sliding surfaces. Provide one-piece rod and track up to 4875 mm long. Provide steel brackets and intermediate supports. Provide one manufacturer's design throughout.

2.4.4.1 Rod Sets

Include wall-hung rod, sliding or rolling carriers, brackets, and intermediate supports with 65 to 90 mm projection for stationary draperies; wall-hung rod, sliding or rolling carriers, master sliding or rolling carriers, ball bearing end pulleys, brackets, intermediate supports with 65 to 90 mm projection, and traverse cord with cord tension pulleys for traverse draperies.

2.4.4.2 Traverse Cord

Size No. 4 with fiberglass center. Provide cord tension pulley, metal tube

type, with mounting bracket, helical spring, and ball bearing pulley wheel. Finish color, white or off-white.

2.4.5 Fasteners

Zinc or cadmium plated.

2.4.6 Fabrication

Prior to cutting and fabrication, field measure each drapery location paying particular attention to field conditions affecting the work.

2.4.6.1 Drapery Fabrication

a. Panels. Make from full or half widths of fabric to give a minimum of 200 percent fullness. 200 percent fullness is defined as 2 times the rod width plus overlaps and returns. Provide conventional french pleats. Draperies shall be apron length. Apron length draperies shall hang 100 mm 4 inch below bottom of window aprons. Provide table-sized drapery panels with a plus or minus tolerance of 6 mm accurately laid-out before cutting. Cut fabric to allow for pleats and for outside ends to return to the walls. For traverse draperies, allow for a minimum overlap of 75 mm at the center. When fabricating panels from fabrics which require special methods or instructions, conform to the workroom instructions provided by the fabric manufacturer. Sew seams and hems using a firm interlocking stitch at a stitch rate per millimeter appropriate to fabric being sewn. Sew with enough slack present so that thread shrinkage due to laundering and dry cleaning will not pucker seams and hems. Do not expose seam and hem raw edges.

b. Heading. Pleat evenly to required widths. Make headings 100 mm high with triple french pleats, and double fold. Include permanent finish stiffener of buckram, crinoline, or pellon across entire heading. Paper stiffening is not acceptable. Machine stitch pleats for a depth of at least 95 millimeters. Do not use horizontal stitching across the width of the heading.

c. Seams. Join widths by serging, overlock, and safety stitch. Retain selvage when practical.

Hems. Double fold hems (top and bottom) and blind stitch so as not to show on the panel face. Make side seams 38 mm wide and bottom seams 100 mm deep with weights sewn 13 mm above hem bottom. Provide weights at corners and each vertical seam.

PART 3 EXECUTION

3.1 WINDOW TREATMENT PLACEMENT

Window covering shall be provided as indicated on the drawings.

3.2 INSTALLATION

Installation shall be in accordance with the approved detail drawings and manufacturer's installation instructions. Units shall be level, plumb,

secure, and at proper height and location relative to window units. The Contractor shall furnish and install supplementary or miscellaneous items in total, including clips, brackets, or anchorages incidental to or necessary for a sound, secure, and complete installation. Installation shall not be initiated until completion of room painting and finishing operations. Upon completion of the installation, window treatments shall be adjusted for form and appearance, shall be in proper operating condition, and shall be free from damage or blemishes. Damaged units shall be repaired or replaced by the Contractor as directed by the Contracting Officer.

3.2.1 Window Blackout Draperies

Install with a minimum clearance of 6 mm between the ceiling and top of drapery heading, apron length, 100 mm (4 inch) below bottom of window aprons. Insert heading hooks at rear of each pleat, placed to obtain the clearance specified. Dress-down and adjust hung draperies to provide best form and appearance. Traverse draperies shall operate smoothly and easily over the full range of travel. Remove incorrectly sized drapery and remake to correct size. Remove damaged, spotted, or otherwise defective fabric and repair to original state or replace with new material.

-- End of Section --

SECTION TABLE OF CONTENTS

DIVISION 13 - SPECIAL CONSTRUCTION

SECTION 13851

FIRE DETECTION AND ALARM SYSTEM, ADDRESSABLE

PART 1 GENERAL

1.1 REFERENCES
1.2 GENERAL REQUIREMENTS
1.2.1 Standard Products
1.2.2 Nameplates
1.2.3 Keys and Locks
1.2.4 Tags
1.2.5 Verification of Dimensions
1.2.6 Compliance
1.2.7 Qualifications
1.2.7.1 Engineer and Technician
1.2.7.2 Installer
1.2.7.3 Design Services
1.3 SYSTEM DESIGN
1.3.1 Operation
1.3.2 Operational Features
1.3.3 Alarm Functions
1.3.4 Primary Power
1.3.5 Battery Backup Power
1.3.6 Interface With other Equipment
1.4 TECHNICAL DATA AND COMPUTER SOFTWARE
1.5 SUBMITTALS
1.6 DELIVERY AND STORAGE

PART 2 PRODUCTS

2.1 CONTROL PANEL
2.1.1 Remote System Audible/Visual Display
2.1.2 Circuit Connections
2.1.3 System Expansion and Modification Capabilities
2.1.4 Addressable Control Module
2.1.5 Addressable Initiating Device Circuits Module
2.1.6 Isolation Module
2.2 STORAGE BATTERIES
2.3 BATTERY CHARGER
2.4 ADDRESSABLE MANUAL FIRE ALARM STATIONS
2.5 FIRE DETECTING DEVICES
2.5.1 Heat Detectors
2.5.1.1 Rate Compensating Detectors
2.5.1.2 Fixed Temperature Detectors
2.5.2 Smoke Detectors
2.5.2.1 Ionization Detectors
2.5.2.2 Photoelectric Detectors
2.5.2.3 Duct Detectors
2.5.2.4 Audible Alarm Base

2.6 NOTIFICATION APPLIANCES
2.6.1 Alarm Bells
2.6.2 Alarm Horns
2.6.3 Visual Notification Appliances
2.6.4 Combination Audible/Visual Notification Appliances
2.6.5 Voice Evacuation System
2.7 FIRE DETECTION AND ALARM SYSTEM PERIPHERAL EQUIPMENT
2.7.1 Electromagnetic Door Hold-Open Devices
2.7.2 Conduit
2.7.3 Wiring
2.7.4 Special Tools and Spare Parts
2.8 TRANSMITTERS
2.8.1 Radio Alarm Transmitters
2.8.1.1 Transmitter Power Supply
2.8.1.2 Radio Alarm Transmitter Housing
2.8.1.3 Antenna
2.8.1.4 Radio Transmitter Interface Device
2.8.2 Master Fire Alarm Boxes

PART 3 EXECUTION

3.1 INSTALLATION
3.1.1 Power Supply for the System
3.1.2 Wiring
3.1.3 Control Panel
3.1.4 Detectors
3.1.5 Notification Appliances
3.1.6 Annunciator Equipment
3.1.7 Addressable Initiating Device Circuits Module
3.1.8 Addressable Control Module
3.2 OVERVOLTAGE AND SURGE PROTECTION
3.2.1 Power Line Surge Protection
3.2.2 Low Voltage DC Circuits Surge Protection
3.2.3 Signal Line Circuit Surge Protection
3.3 GROUNDING
3.4 TESTING
3.4.1 Preliminary Tests
3.4.2 Acceptance Test
3.5 TRAINING

-- End of Section Table of Contents --

SECTION 13851

FIRE DETECTION AND ALARM SYSTEM, ADDRESSABLE

PART 1 GENERAL

1.1 REFERENCES

The publications listed below form a part of this specification to the extent referenced. The publications are referred to in the text by basic designation only.

AMERICAN NATIONAL STANDARDS INSTITUTE (ANSI)

ANSI S3.41	(1990) Audible Emergency Evacuation Signals

AMERICAN SOCIETY OF MECHANCIAL ENGINEERS (ASME)

ASME A17.1	(1996) Safety Code for Elevators and Escalators

CODE OF FEDERAL REGULATIONS (CFR)

47 CFR 15	Radio Frequency Devices

INSTITUTE OF ELECTRICAL AND ELECTRONICS ENGINEERS (IEEE)

IEEE C62.41	(1991) Surge Voltages in Low-Voltage AC Power Circuits

NATIONAL FIRE PROTECTION ASSOCIATION (NFPA)

NFPA 70	(1999) National Electrical Code
NFPA 72	(1999) National Fire Alarm Code
NFPA 90A	(1996) Installation of Air Conditioning and Ventilating Systems
NFPA 1221	(1994) Installation, Maintenance and Use of Public Fire Service Communication Systems

UNDERWRITERS LABORATORIES (UL)

UL FPED	**(2000) Fire Protection Equipment Directory**
UL 6	(1997) Rigid Metal Conduit
UL 38	(1994; Rev Jan 1994) Manually Actuated Signaling Boxes for Use with Fire-Protective Signaling Systems
UL 228	(1997) Door Closers-Holders, With or Without Integral Smoke Detectors

UL 268	(1996) Smoke Detectors for Fire Protective Signaling Systems
UL 268A	(1993; Rev thru May 1997) Smoke Detectors for Duct Applications
UL 464	(1996) Audible Signal Appliances
UL 521	(1993; Rev Oct 1994) Heat Detectors for Fire Protective Signaling Systems
UL 797	(1993; Rev thru Mar 1997) Electrical Metallic Tubing
UL 864	(1991; Rev thru May 1994) Control Units for Fire-Protective Signaling Systems
UL 1242	(1996) Intermediate Metal Conduit
UL 1971	(1995; Rev thru May 1997) Signaling Devices for the Hearing Impaired

1.2 GENERAL REQUIREMENTS

1.2.1 Standard Products

Material and equipment shall be the standard products of a manufacturer regularly engaged in the manufacture of the products for at least 2 years prior to bid opening. Equipment shall be supported by a service organization that can provide service within 24 hours of notification.

1.2.2 Nameplates

Major components of equipment shall have the manufacturer's name, address, type or style, voltage and current rating, and catalog number on a noncorrosive and nonheat-sensitive plate which is securely attached to the equipment.

1.2.3 Keys and Locks

Locks shall be keyed alike. Four keys for the system shall be provided.

1.2.4 Tags

Tags with stamped identification number shall be furnished for keys and locks.

1.2.5 Verification of Dimensions

After becoming familiar with details of the work, the Contractor shall verify dimensions in the field and shall advise the Contracting Officer of any discrepancy before performing the work.

1.2.6 Compliance

The fire detection and alarm system and the central reporting system shall be configured in accordance with NFPA 72. **The equipment furnished shall be compatible and be UL FPED listed, FM approved, or approved or listed by a**

nationally recognized testing laboratory in accordance with the applicable NFPA standards.

1.2.7 Qualifications

1.2.7.1 Engineer and Technician

a. Registered Professional Engineer with verification of experience and at least 4 years of current experience in the design of the fire protection and detection systems.

b. National Institute for Certification in Engineering Technologies (NICET) qualifications as an engineering technician in fire alarm systems program with verification of experience and current NICET certificate.

c. The Registered Professional Engineer may perform all required items under this specification. The NICET Fire Alarm Technician shall perform only the items allowed by the specific category of certification held.

1.2.7.2 Installer

The installing Contractor shall provide the following: NICET Fire Alarm Technicians to perform the installation of the system. A NICET Level 3 Fire Alarm Technician shall supervise the installation of the fire alarm system. NICET Level 2 or higher Fire Alarm Technician shall install and terminate fire alarm devices, cabinets and panels. An electrician or NICET Level 1 Fire Alarm Technician shall install conduit for the fire alarm system. The Fire Alarm technicians installing the equipment shall be factory trained in the installation, adjustment, testing, and operation of the equipment specified herein and on the drawings.

1.2.7.3 Design Services

Installations requiring designs or modifications of fire detection, fire alarm, or fire suppression systems shall require the services and review of a qualified fire protection engineer. For the purposes of meeting this requirement, a qualified fire protection engineer is defined as an individual meeting one of the following conditions:

a. An engineer having a Bachelor of Science or Masters of Science Degree in Fire Protection Engineering from an accredited university engineering program, plus a minimum of 2 years' work experience in fire protection engineering.

b. A registered professional engineer (P.E.) in fire protection engineering.

c. A registered PE in a related engineering discipline and member grade status in the National Society of Fire Protection Engineers.

d. An engineer with a minimum of 10 years' experience in fire protection engineering and member grade status in the National Society of Fire Protection Engineers.

1.3 SYSTEM DESIGN

1.3.1 Operation

The Contractor shall design and install the addressable fire alarm and detection system in compliance with NFPA 72, complete and ready to use. The system shall be activated into the alarm mode by actuation of any alarm initiating device. The system shall remain in the alarm mode until the initiating device is reset and the fire alarm control panel is reset and restored to normal. Alarm initiating devices shall be connected to initiating device circuits (IDC), Style D, to signal line circuits (SLC), Style 6, in accordance with NFPA 72. Alarm notification appliances shall be connected to notification appliance circuits (NAC), Style Z in accordance with NFPA 72. A looped conduit system shall be provided so that if the conduit and all conductors within are severed at any point, all IDC, NAC and SLC will remain functional. The conduit loop requirement is not applicable to the signal transmission link from the local panels (at the protected premises) to the Supervising Station (fire alarm central communication center). Textual, audible, and visual appliances and systems shall comply with NFPA 72. Fire alarm system components requiring power, except for the control panel power supply, shall operate on 24 Volts dc. Addressable system shall be microcomputer (microprocessor or microcontroller) based with a minimum word size of eight bits and shall provide the following features:

a. Sufficient memory to perform as specified and as shown for addressable system.

b. Individual identity of each addressable device for the following conditions: alarm; trouble; open; short; and appliances missing/failed remote detector - sensitivity adjustment from the panel for smoke detectors

c. Capability of each addressable device being individually disabled or enabled from the panel.

d. Each SLC shall be sized to provide 40 percent addressable expansion without hardware modifications to the panel.

1.3.2 Operational Features

The system shall have the following operating features:

a. Monitor electrical supervision of IDC, SLC, and NAC. Smoke detectors shall have combined alarm initiating and power circuits.

b. Monitor electrical supervision of the primary power (ac) supply, battery voltage, placement of alarm zone module (card, PC board) within the control panel, and transmitter tripping circuit integrity.

c. A trouble buzzer and trouble LED/LCD (light emitting diode/liquid crystal diode) to activate upon a single break, open, or ground fault condition which prevents the required normal operation of the system. The trouble signal shall also operate upon loss of primary power (ac) supply, low battery voltage, removal of alarm zone module (card, PC board), and disconnection of the circuit used for transmitting alarm signals off-premises. A trouble alarm silence switch shall be provided which will silence the trouble buzzer, but will not extinguish the trouble indicator LED/LCD. Subsequent trouble and supervisory alarms shall sound the trouble signal until silenced. After the system returns to normal operating conditions, the trouble buzzer shall again sound until

the silencing switch returns to normal position, unless automatic trouble reset is provided.

d. A one person test mode. Activating an initiating device in this mode will activate an alarm for a short period of time, then automatically reset the alarm, without activating the transmitter during the entire process.

e. A transmitter disconnect switch to allow testing and maintenance of the system without activating the transmitter but providing a trouble signal when disconnected and a restoration signal when reconnected.

f. Evacuation alarm silencing switch which, when activated, will silence alarm devices, but will not affect the zone indicating LED/LCD nor the operation of the transmitter. This switch shall be over-ridden upon activation of a subsequent alarm from an unalarmed device and the NAC devices will be activated.

g. Electrical supervision for circuits used for supervisory signal services (i.e., sprinkler systems, valves, etc.). Supervision shall detect any open, short, or ground.

h. Confirmation or verification of all smoke detectors. The control panel shall interrupt the transmission of an alarm signal to the system control panel for a factory preset period. This interruption period shall be adjustable from 1 to 60 seconds and be factory set at 20 seconds. Immediately following the interruption period, a confirmation period shall be in effect during which time an alarm signal, if present, will be sent immediately to the control panel. Fire alarm devices other than smoke detectors shall be programmed without confirmation or verification.

i. The fire alarm control panel shall provide supervised addressable relays for HVAC shutdown. An override at the HVAC panel shall not be provided.

j. Provide one person test mode - Activating an initiating device in this mode will activate an alarm for a short period of time, then automatically reset the alarm, without activating the transmitter during the entire process.

k. The fire alarm control panel shall provide the required monitoring and supervised control outputs needed to accomplish elevator recall, including recall to an alternate floor.

l. The fire alarm control panel shall monitor and control the fire sprinkler system, or other fire protection extinguishing system.

m. The control panel and field panels shall be software reprogrammable to enable expansion or modification of the system without replacement of hardware or firmware. Examples of required changes are: adding or deleting devices or zones; changing system responses to particular input signals; programming certain input signals to activate auxiliary devices.

n. Zones for IDC and NAC shall be arranged as indicated on the contract drawings.

o. When identified on the drawings, the control panel shall be UL listed or FM approved for "Releasing Device Service." The solenoid value shall be listed as compatible with the control panel.

1.3.3 Alarm Functions

An alarm condition on a circuit shall automatically initiate the following functions:

a. Transmission of signals over the station radio fire reporting system.

b. Visual indications of the alarmed devices on the fire alarm control panel display and on the remote audible/visual display.

c. Continuous sounding or operation of alarm notification appliances throughout the building as required by ANSI S3.41.

d. Closure of doors held open by electromagnetic devices.

e. The air handling units shall shutdown upon detection of smoke by the duct smoke detector.

f. Shutdown of power to the data processing equipment in the alarmed area.

g. Automatic discharge of the designated fire suppression systems, upon activation of a heat detector.

h. Shutdown of elevator power and releasing the solenoid valve upon activation of the heat detector.

i. Elevator hoist way heat detector and flow switch and elevator machine room heat detector and flow switch operate as indicated in the contract specifications Section 14210 ELEVATORS ELECTRIC or Section 14240 ELECTRIC, HYDRAULIC. Transmission of alarm to Fire Department and activation of alarm annunciator is required.

j. Elevator lobby and elevator machine room smoke detectors shall initiate Emergency Phase I in accordance with ASME A17.1 and initiate supervisory alarm annunciator and transmit supervisory alarm Fire Department.

k. Activation of tamper switches shall activate supervisory alarm annunciator and transmit supervisory alarm to Fire Department.

1.3.4 Primary Power

Operating power shall be provided as required by paragraph Power Supply for the System. Transfer from normal to emergency power or restoration from emergency to normal power shall be fully automatic and not cause transmission of a false alarm. Loss of ac power shall not prevent transmission of a signal via the fire reporting system upon operation of any initiating circuit.

1.3.5 Battery Backup Power

Battery backup power shall be through use of rechargeable, sealed-type storage batteries and battery charger.

1.3.6 Interface With other Equipment

Interfacing components shall be furnished as required to connect to subsystems or devices which interact with the fire alarm system, such as supervisory or alarm contacts in suppression systems, operating interfaces for air handler shutdown, door releases, elevator recall, etc.

1.4 TECHNICAL DATA AND COMPUTER SOFTWARE

Technical data and computer software (meaning technical data which relates to computer software) which is specifically identified in this project, and which may be defined/required in other specifications, shall be delivered, strictly in accordance with the CONTRACT CLAUSES, and in accordance with the Contract Data Requirements List, DD Form 1423. Data delivered shall be identified by reference to the particular specification paragraph against which it is furnished. Data to be submitted shall include complete system, equipment, and software descriptions. Descriptions shall show how the equipment will operate as a system to meet the performance requirements of this contract. The data package shall also include the following:

(1) Identification of programmable portions of system equipment and capabilities.

(2) Description of system revision and expansion capabilities and methods of implementation detailing both equipment and software requirements.

(3) Provision of operational software data on all modes of programmable portions of the fire alarm and detection system.

(4) Description of Fire Alarm Control Panel equipment operation.

(5) Description of auxiliary and remote equipment operations.

(6) Library of application software.

(7) Operation and maintenance manuals as specified in SD-19 of the Submittals paragraph.

1.5 SUBMITTALS

Government approval is required for submittals with a "GA" designation; submittals having an "FI0" designation are for information only. The following shall be submitted in accordance with Section 01330 SUBMITTAL PROCEDURES:

SD-01 Data

Storage Batteries; GA.

Substantiating battery calculations for supervisory and alarm power requirements. Ampere-hour requirements for each system component and each panel component, and the battery recharging period shall be included.

Voltage Drop; GA.

Voltage drop calculations for notification appliance circuits to indicate that sufficient voltage is available for proper appliance operation.

Spare Parts; FIO.

Spare parts data for each different item of material and equipment specified, not later than 3 months prior to the date of beneficial occupancy. Data shall include a complete list of parts and supplies with the current unit prices and source of supply and a list of the parts recommended by the manufacturer to be replaced after 1 year of service.

Technical Data and Computer Software; GA.

Technical data which relates to computer software.

SD-04 Drawings

Fire Alarm Reporting System; GA.

Detail drawings, prepared and signed by a Registered Professional Engineer or a NICET Level 3 Fire Alarm Technician, consisting of a complete list of equipment and material, including manufacturer's descriptive and technical literature, catalog cuts, and installation instructions. Note that the contract drawings show layouts based on typical detectors. The Contractor shall check the layout based on the actual detectors to be installed and make any necessary revisions in the detail drawings. The detail drawings shall also contain complete wiring and schematic diagrams for the equipment furnished, equipment layout, and any other details required to demonstrate that the system has been coordinated and will properly function as a unit. Detailed point-to-point wiring diagram shall be prepared and signed by a Registered Professional Engineer or a NICET Level 3 Fire Alarm Technician showing points of connection. Diagram shall include connections between system devices, appliances, control panels, supervised devices, and equipment that is activated or controlled by the panel.

SD-06 Instructions

Training; FIO.

Lesson plans, operating instructions, maintenance procedures, and training data, furnished in manual format, for the training courses. The operations training shall familiarize designated government personnel with proper operation of the fire alarm system. The maintenance training course shall provide the designated government personnel adequate knowledge required to diagnose, repair, maintain, and expand functions inherent to the system.

SD-08 Statements

Testing; FIO.

Detailed test procedures, prepared and signed by a Registered Professional Engineer or a NICET Level 3 Fire Alarm Technician, for the fire detection and alarm system 60 days prior to performing system tests.

SD-09 Reports

Testing; GA.

Test reports, in booklet form, showing field tests performed to prove

compliance with the specified performance criteria, upon completion and testing of the installed system. Each test report shall document readings, test results and indicate the final position of controls. The Contractor shall include the NFPA 72 Certificate of Completion and NFPA 72 Inspection and Testing Form, with the appropriate test reports.

SD-13 Certificates

Equipment; GA.

Certified copies of current approvals or listings issued by an independent test lab if not listed by UL, FM or other nationally recognized testing laboratory, showing compliance with specified NFPA standards.

Qualifications; GA.

Proof of qualifications for required personnel. The installer shall submit proof of experience for the Professional Engineer, fire alarm technician, and the installing company.

SD-19 Operation and Maintenance Manuals

Technical Data and Computer Software; GA.

Six copies of operating manual outlining step-by-step procedures required for system startup, operation, and shutdown. The manual shall include the manufacturer's name, model number, service manual, parts list, and complete description of equipment and their basic operating features. Six copies of maintenance manual listing routine maintenance procedures, possible breakdowns and repairs, and troubleshooting guide. The manuals shall include conduit layout, equipment layout and simplified wiring, and control diagrams of the system as installed. The manuals shall include complete procedures for system revision and expansion, detailing both equipment and software requirements. Original and backup copies of all software delivered for this project shall be provided, on each type of media utilized. Manuals shall be approved prior to training.

1.6 DELIVERY AND STORAGE

Equipment delivered and placed in storage shall be stored with protection from the weather, humidity and temperature variation, dirt, dust, and any other contaminants.

PART 2 PRODUCTS

2.1 CONTROL PANEL

Control Panel shall comply with the applicable requirements of UL 864. Panel shall be modular, installed in a semi-flush mounted steel cabinet with hinged door and cylinder lock. Control panel shall be a clean, uncluttered, and orderly assembled panel containing components and equipment required to provide the specified operating and supervisory functions of the system. The panel shall have prominent rigid plastic, phenolic or metal identification plates for LED/LCDs, zones, SLC, controls, meters, fuses, and switches. Nameplates for fuses shall also include ampere rating. The LED/LCD displays shall be located on the exterior of the cabinet door or be visible through the cabinet door. Control panel switches shall be within the locked cabinet. A suitable means (single operation) shall be provided for testing the control panel visual

indicating devices (meters or LEDs/LCDs). Meters and LEDs shall be plainly visible when the cabinet door is closed. Signals and LEDs/LCDs shall be provided to indicate by zone any alarm, supervisory or trouble condition on the system. Each IDC shall be powered and supervised so that a signal on one zone does not prevent the receipt of signals from other devices. Provide a minimum of two signaling line circuits. Loss of power, including batteries, shall not require the manual reloading of a program. Upon restoration of power, startup shall be automatic, and shall not require any manual operation. The loss of primary power or the sequence of applying primary or emergency power shall not affect the transmission of alarm, supervisory or trouble signals. Visual annunciation shall be provided for LED/LCD visual display as an integral part of the control panel and shall identify with a word description and id number each device. Cabinets shall be provided with ample gutter space to allow proper clearance between the cabinet and live parts of the panel equipment. If more than one modular unit is required to form a control panel, the units shall be installed in a single cabinet large enough to accommodate units. Cabinets shall be painted red.

2.1.1 Remote System Audible/Visual Display

Audible appliance shall have a minimum sound level output rating of 85 dBA at 3.05 m and operate in conjunction with the panel integral display. The audible device shall be silenced by a system silence switch on the remote system. The audible device shall be silenced by the system silence switch located at the remote location, but shall not extinguish the visual indication. The remote LED/LCD visual display shall provide identification, consisting of the word description and id number for each device as displayed on the control panel. A rigid plastic, phenolic or metal identification sign which reads "Fire Alarm System Remote Display" shall be provided at the remote audible/visual display. The remote visual appliance located with the audible appliance shall not be extinguished until the trouble or alarm has been cleared.

2.1.2 Circuit Connections

Circuit conductors entering or leaving the panel shall be connected to screw-type terminals with each conductor and terminal marked for identification.

2.1.3 System Expansion and Modification Capabilities

Any equipment and software needed by qualified technicians to implement future changes to the fire alarm system shall be provided as part of this contract.

2.1.4 Addressable Control Module

The control module shall be capable of operating as a relay (dry contact form C) for interfacing the control panel with other systems, and to control door holders or initiate elevator fire service. The module shall be UL listed as compatible with the control panel. The indicating device or the external load being controlled shall be configured as a Style Y notification appliance circuits. The system shall be capable of supervising, audible, visual and dry contact circuits. The control module shall have both an input and output address. The supervision shall detect a short on the supervised circuit and shall prevent power from being applied to the circuit. The control model shall provide address setting means compatible with the control panel's SLC supervision and store an

internal identifying code. The control module shall contain an integral LED that flashes each time the control module is polled.

2.1.5 Addressable Initiating Device Circuits Module

The initiating device being monitored shall be configured as a Style D initiating device circuits. The system shell be capable of defining any module as an alarm module and report alarm trouble, loss of polling, or as a supervisory module, and reporting supervisory short, supervisory open or loss of polling. The module shall be UL listed as compatible with the control panel. The monitor module shall provide address setting means compatible with the control panel's SLC supervision and store an internal identifying code. Monitor module shall contain an integral LED that flashes each time the monitor module is polled. Pull stations with a monitor module in a common backbox are not required to have an LED.

2.1.6 Isolation Module

Provide isolation modules to isolate wire-to-wire short circuits on a loop and limit the number of other modules or sensors that are incapacitated by the short circuit fault. Place isolator modules on the signaling line circuit located such that not more than 30 addressable devices are connected between isolation modules. If a wire-to-wire short occurs, the module shall automatically open the circuit. On repair of the short, the module shall automatically reconnect the isolated section of the signaling line circuit. Module shall contain an integral LED that flashes each time the module is polled and illuminates steadily to indicate that a short has been detected and isolated. The module shall be UL listed as compatible with the control panel.

2.2 STORAGE BATTERIES

Storage batteries shall be provided and shall be 24 Vdc sealed, lead-calcium type requiring no additional water. The batteries shall have ample capacity, with primary power disconnected, to operate the fire alarm system for a period of 72 hours. Following this period of battery operation, the batteries shall have ample capacity to operate all components of the system, including all alarm signaling devices in the total alarm mode for a minimum period of 15 minutes. Batteries shall be located at the bottom of the panel. Batteries shall be provided with overcurrent protection in accordance with NFPA 72. Separate battery cabinets shall have a lockable, hinged cover similar to the fire alarm panel. The lock shall be keyed the same as the fire alarm control panel. Cabinets shall be painted to match the fire alarm control panel.

2.3 BATTERY CHARGER

Battery charger shall be completely automatic, 24 Vdc with high/low charging rate, capable of restoring the batteries from full discharge (18 Volts dc) to full charge within 48 hours. A pilot light indicating when batteries are manually placed on a high rate of charge shall be provided as part of the unit assembly, if a high rate switch is provided. Charger shall be located in control panel cabinet or in a separate battery cabinet.

2.4 ADDRESSABLE MANUAL FIRE ALARM STATIONS

Addressable manual fire alarm stations shall conform to the applicable requirements of UL 38. Manual stations shall be connected into signal line circuits. Stations shall be installed on flush mounted outlet boxes.

Manual stations shall be mounted at 1220 mm. Stations shall be single action type. Stations shall be finished in red, with raised letter operating instructions of contrasting color. Stations requiring the breaking of glass or plastic panels for operation are not acceptable. Stations employing glass rods are not acceptable. The use of a key or wrench shall be required to reset the station. Gravity or mercury switches are not acceptable. Switches and contacts shall be rated for the voltage and current upon which they operate. Addressable pull stations shall be capable of being field programmed, shall latch upon operation and remain latched until manually reset. Stations shall have a separate screw terminal for each conductor. Surface mounted boxes shall be matched and painted the same color as the fire alarm manual stations.

2.5 FIRE DETECTING DEVICES

Fire detecting devices shall comply with the applicable requirements of NFPA 72, NFPA 90A, UL 268, UL 268A, and UL 521. The detectors shall be provided as indicated. Detector base shall have screw terminals for making connections. No solder connections will be allowed. Detectors located in concealed locations (above ceiling, raised floors, etc.) shall have a remote visible indicator LED/LCD. Addressable fire detecting devices, except flame detectors, shall be dynamically supervised and uniquely identified in the control panel. All fire alarm initiating devices shall be individually addressable, except where indicated. Installed devices shall conform to NFPA 70 hazard classification of the area where devices are to be installed.

2.5.1 Heat Detectors

Heat detectors shall be designed for detection of fire by fixed temperature rate-compensating principle. Heat detector spacing shall be rated in accordance with UL 521. Detectors located in areas subject to moisture, exterior atmospheric conditions shall be types approved for such locations. Heat detectors located in attic spaces or similar concealed spaces below the roof shall be intermediate temperature rated. Heat detectors located in the elevator shaft and machine room shall be within 600 mm of the sprinkler.

2.5.1.1 Rate Compensating Detectors

Detectors shall be surface mounted vertical and horizontal type, with outlet box supported independently of wiring connections. Detectors shall be hermetically sealed and automatically resetting. Rate Compensated detectors shall be rated for 15 by 15 m. The detectors shall have a specific temperature setting of 57.2 degree C.

2.5.1.2 Fixed Temperature Detectors

Detectors shall be designed for semi-flush outlet box mounting and supported independently of wiring connections. Detectors shall be designed to detect high heat. The detectors shall have a specific temperature setting of 57.2 degrees C. The UL 521 test rating for the fixed temperature detectors shall be rated for 4.57 by 4.57 m.

2.5.2 Smoke Detectors

Smoke detectors shall be designed for detection of abnormal smoke densities. Smoke detectors shall be ionization or photoelectric type. Detectors shall contain a visible indicator LED/LCD that shows when the

unit is in alarm condition. Detectors shall not be adversely affected by vibration or pressure. Detectors shall be the plug-in type in which the detector base contains terminals for making wiring connections. Detectors that are to be installed in concealed (above false ceilings, etc.) locations shall be provided with a remote indicator LED/LCD suitable for mounting in a finished, visible location.

2.5.2.1 Ionization Detectors

Ionization detectors with a dual chamber shall be responsive to both invisible and visible particles of combustion. One chamber shall be a reference chamber and the second a sampling chamber. Detectors containing radium shall not be provided. Detectors shall not cause an alarm condition due to anticipated fluctuations in relative humidity. The sensitivity of the detector shall be field adjustable to compensate for operating conditions. Detector shall require no replacement or readjustment to restore it to normal operation after an alarm condition. Each detector shall be capable of withstanding ambient air velocity up to 1.5 meters per second in accordance with UL 268. Addressable smoke detectors shall be capable of having the sensitivity being remotely adjusted by the control panel.

2.5.2.2 Photoelectric Detectors

Detectors shall operate on a light scattering concept using an LED light source. Failure of the LED shall not cause an alarm condition. Detectors shall be factory set for sensitivity and shall require no field adjustments of any kind. Detectors shall have an obscuration rating in accordance with UL 268. Addressable smoke detectors shall be capable of having the sensitivity being remotely adjusted by the control panel.

2.5.2.3 Duct Detectors

Duct-mounted photoelectric smoke detectors shall be furnished and installed where indicated and in accordance with NFPA 90A. Units shall consist of a smoke detector as specified in paragraph Photoelectric Detectors, mounted in a special housing fitted with duct sampling tubes. Detector circuitry shall be mounted in a metallic enclosure exterior to the duct. Detectors shall have a manual reset. Detectors shall be rated for air velocities that include air flows between 2.5 and 20 m/s. Detectors shall be powered from the fire alarm panel. Sampling tubes shall run the full width of the duct. The duct detector package shall conform to the requirements of NFPA 90A, UL 268A, and shall be UL listed for use in air-handling systems. The control functions, operation, reset, and bypass shall be controlled from the fire alarm control panel. Lights to indicate the operation and alarm condition; and the test and reset buttons shall be visible and accessible with the unit installed and the cover in place. Detectors mounted above 1.83 m and those mounted below 1.83 m that cannot be easily accessed while standing on the floor, shall be provided with a remote detector indicator panel containing test and reset switches. Remote lamps and switches as well as the affected fan units shall be properly identified in etched plastic placards. Detectors shall have auxiliary contacts to provide control, interlock, and shutdown functions specified in Section 15951 DIRECT DIGITAL CONTROL FOR HVAC. The detectors shall be supplied by the fire alarm system manufacturer to ensure complete system compatibility.

2.5.2.4 Audible Alarm Base

Where indicated provide sensor base with an integral audible alarm capable

of 85 dBA at 3.048 m. Alarm shall be capable of operating independent of the smoke sensor. Where indicated the bases shall be connected in tandem such that all audible based within a unit are activated.

2.6 NOTIFICATION APPLIANCES

Audible appliances shall conform to the applicable requirements of UL 464. Devices shall be connected into notification appliance circuits. Devices shall have a separate screw terminal for each conductor. Audible appliances shall generate a unique audible sound from other devices provided in the building and surrounding area. Surface mounted audible appliances shall be painted red. Recessed audible appliances shall be installed with a grill that is painted red.

2.6.1 Alarm Bells

Bells shall be surface mounted with the matching mounting back box recessed. Bells shall be suitable for use in an electrically supervised circuit. Bells shall be the underdome type producing a minimum output rating of 85 dBA at 3.1 m. Bells used in exterior locations shall be specifically listed or approved for outdoor use and be provided with metal housing and protective grilles. Single stroke, electrically operated, supervised, solenoid bells shall be used for coded applications.

2.6.2 Alarm Horns

Horns shall be surface mounted, with the matching mounting back box recessed single projector, vibrating type suitable for use in an electrically supervised circuit. Horns shall produce a sound rating of at least 95 dBA at 3.05 m. Horns used in exterior locations shall be specifically listed or approved for outdoor use and be provided with metal housing and protective grilles.

2.6.3 Visual Notification Appliances

Visual notification appliances shall conform to the applicable requirements of UL 1971 and the contract drawings. Appliances shall have clear high intensity optic lens, xenon flash tubes, and output white light. Strobe flash rate shall be between 1 to 3 flashes per second and a minimum of 75 candela or as indicated on the drawings. Strobe shall be semi-flush mounted, ADA compliant.

2.6.4 Combination Audible/Visual Notification Appliances

Combination audible/visual notification appliances shall provide the same requirements as individual units except they shall mount as a unit in standard backboxes. Units shall be factory assembled. Any other audible notification appliance employed in the fire alarm systems shall be approved by the Contracting Officer.

2.6.5 Voice Evacuation System

The voice evacuation system shall provide for one-way voice communications, routing and pre-amplification of digital alarm tones and voice (digital and analog) messages. The system shall be zoned for messages (Custom and prerecorded) and tones as indicated on the drawings. The following electronic tones shall be available from the amplifier: Slow Whoop, High/Low, Horn, Chime, Beep, Stutter, Wail and Bell. The system shall have a microphone and allow for general paging within the space. Operation

shall be either manually from a control switch or automatically from the fire alarm control panel. Reset shall be accomplished by the fire alarm control panel during panel reset.

2.7 FIRE DETECTION AND ALARM SYSTEM PERIPHERAL EQUIPMENT

2.7.1 Electromagnetic Door Hold-Open Devices

Devices shall be attached to the walls unless otherwise indicated. Devices shall comply with the appropriate requirements of UL 228. Devices shall operate on 120 VAC power. Compatible magnetic component shall be attached to the door. Under normal conditions, the magnets shall attract and hold the doors open. When magnets are de-energized, they shall release the doors. Magnets shall have a holding force of 111.2 N (25 pounds). Devices shall be UL or FM approved. Housing for devices shall be brushed aluminum or stainless steel. Operation shall be fail safe with no moving parts. Electromagnetic door hold-open devices shall not be required to be held open during building power failure.

2.7.2 Conduit

Conduit and fittings shall comply with NFPA 70, UL 6, UL 1242, and UL 797.

2.7.3 Wiring

Wiring for 120 Vac power shall be No. 12 AWG minimum. The SLC wiring shall be fiber optic or copper cable in accordance with the manufacturers requirements. Wiring for fire alarm dc circuits shall be No. 14 AWG minimum. Voltages shall not be mixed in any junction box, housing, or device, except those containing power supplies and control relays. Wiring shall conform to NFPA 70. System field wiring shall be solid copper and installed in metallic conduit or electrical metallic tubing, except that rigid plastic conduit may be used under slab-on-grade. Conductors shall be color coded. Conductors used for the same functions shall be similarly color coded. Wiring code color shall remain uniform throughout the circuit. Pigtail or T-tap connections to initiating device circuits, supervisory alarm circuits, and notification appliance circuits are prohibited.

2.7.4 Special Tools and Spare Parts

Software, connecting cables and proprietary equipment, necessary for the maintenance, testing, and reprogramming of the equipment shall be furnished to the Contracting Officer. Two spare fuses of each type and size required shall be furnished. Two percent of the total number of each different type of detector, but no less than two each, shall be furnished. Spare fuses shall be mounted in the fire alarm panel.

2.8 TRANSMITTERS

2.8.1 Radio Alarm Transmitters

Transmitters shall be compatible with proprietary supervising station receiving equipment. Each radio alarm transmitter shall be the manufacturer's recognized commercial product, completely assembled, wired, factory tested, and delivered ready for installation and operation. Transmitters shall be provided in accordance with applicable portions of NFPA 72, NFPA 1221, and 47 CFR 15. Transmitter electronics module shall be contained within the physical housing as an integral, removable assembly.

The transmitter shall be fully compatible with the King Fisher supervising station receiving equipment. At the contractors option, and if UL listed, the transmitter may be housed in the same panel as the fire alarm control panel.

2.8.1.1 Transmitter Power Supply

Each radio alarm transmitter shall be powered by a combination of locally available 120-volt ac power and a sealed, lead-calcium battery.

a. Operation: Each transmitter shall operate from 120-volt ac power. In the event of 120-volt ac power loss, the transmitter shall automatically switch to battery operation. Switchover shall be accomplished with no interruption of protective service, and shall automatically transmit a trouble message. Upon restoration of ac power, transfer back to normal ac power supply shall also be automatic.

b. Battery Power: Transmitter standby battery capacity shall provide sufficient power to operate the transmitter in a normal standby status for a minimum of 72 hours and be capable of transmitting alarms during that period.

2.8.1.2 Radio Alarm Transmitter Housing

Transmitter housing shall be NEMA Type 1. The housing shall contain a lock that is keyed identical to the fire alarm system for the building. Radio alarm transmitter housing shall be factory painted with a suitable priming coat and not less than two coats of a hard, durable weatherproof enamel.

2.8.1.3 Antenna

The Contractor shall provide omnidirectional, coaxial, halfwave dipole antennas for radio alarm transmitters with a driving point impedance to match transmitter output. The antenna and antenna mounts shall be corrosion resistant and designed to withstand wind velocities of 161 km/h. Antennas shall not be mounted to any portion of the building roofing system.

2.8.1.4 Radio Transmitter Interface Device

Provide interface panel as described in Section 13852, "FIRE ALARM REPORTING SYSTEM, RADIO TYPE."

2.8.2 Master Fire Alarm Boxes

Master fire alarm boxes shall be of the coded, noninterfering type with succession features having a shunt type auxiliary tripping device, and of the prewound, open-door, pull-lever type. Mechanism shall be housed in a weatherproof cottage shell type of housing with metallic or rigid plastic code number plate mounted on the exterior face of the cottage shell. Operation of the actuating pull lever shall cause the box to transmit four complete rounds of code to gongs, recorders, and other devices on the same circuit. Driving springs shall have the capability to transmit not less than eight complete four-round groups of code before being rewound. Boxes shall be designed for operation of 100 milliamperes dc, but with capability of full operation of 70 milliamperes and up to 120 milliamperes. Activation of box when a single open fault is present on exterior fire alarm circuit shall have box to idle for one complete round only, then

immediately transmit four complete code rounds via the box earth ground connection. Each box shall be equipped with manual signaling key, telephone jack, silent test device, and box shunt device. Box shall be wall- with center of box 1525 mm above grade, and provided with lighting fixture. Mounting bolts, brackets, fastenings, and conduit shall be copper alloy, cadmium, or zinc-coated steel. Code wheel shall be metallic and box code shall be as directed. Electrically powered master fire alarm boxes shall have standby sealed, lead calcium battery capacity for a minimum of 72 hours and be capable of transmitting alarms during that period.

PART 3 EXECUTION

3.1 INSTALLATION

All work shall be installed as shown and in accordance with the manufacturer's diagrams and recommendations, unless otherwise specified. Smoke detectors shall not be installed until construction is essentially complete and the building has been thoroughly cleaned.

3.1.1 Power Supply for the System

A single dedicated circuit connection for supplying power from a branch circuit to each building fire alarm system shall be provided. The power shall be supplied as shown on the drawings. The power supply shall be equipped with a locking mechanism and marked in red with the words "FIRE ALARM CIRCUIT CONTROL".

3.1.2 Wiring

Conduit size for wiring shall be in accordance with NFPA 70. Wiring for the fire alarm system shall not be installed in conduits, junction boxes, or outlet boxes with conductors of lighting and power systems. Not more than two conductors shall be installed under any device screw terminal. The wires under the screw terminal shall be straight when placed under the terminal then clamped in place under the screw terminal. The wires shall be broken and not twisted around the terminal. Circuit conductors entering or leaving any mounting box, outlet box enclosure, or cabinet shall be connected to screw terminals with each terminal and conductor marked in accordance with the wiring diagram. Connections and splices shall be made using screw terminal blocks. The use of wire nut type connectors in the system is prohibited. Wiring within any control equipment shall be readily accessible without removing any component parts. The fire alarm equipment manufacturer's representative shall be present for the connection of wiring to the control panel.

3.1.3 Control Panel

The control panel and its assorted components shall be mounted so that no part of the enclosing cabinet is less than 300 mm nor more than 2000 mm above the finished floor. Manually operable controls shall be between 900 and 1100 mm above the finished floor. Panel shall be installed to comply with the requirements of UL 864.

3.1.4 Detectors

Detectors shall be located and installed in accordance with NFPA 72. Detectors shall be connected into signal line circuits or initiating device circuits as indicated on the drawings. Detectors shall be at least 300 mm from any part of any lighting fixture. Detectors shall be located at least

900 mm from diffusers of air handling systems. Each detector shall be provided with appropriate mounting hardware as required by its mounting location. Detectors which mount in open space shall be mounted directly to the end of the stubbed down rigid conduit drop. Conduit drops shall be firmly secured to minimize detector sway. Where length of conduit drop from ceiling or wall surface exceeds 900 mm, sway bracing shall be provided. Detectors installed in concealed locations (above ceiling, raised floors, etc.) shall have a remote visible indicator LED/LCD in a finished, visible location.

3.1.5 Notification Appliances

Notification appliances shall be mounted 2032 mm above the finished floor or 150 mm below the ceiling, whichever is lower.

3.1.6 Annunciator Equipment

Annunciator equipment shall be mounted where indicated on the drawings.

3.1.7 Addressable Initiating Device Circuits Module

The initiating device circuits module shall be used to connect supervised conventional initiating devices (water flow switches, water pressure switches, manual fire alarm stations, high/low air pressure switches, and tamper switches). The module shall mount in an electrical box adjacent to or connected to the device it is monitoring and shall be capable of Style B supervised wiring to the initiating device. In order to maintain proper supervision, there shall be no T-taps allowed on style B lines. Addressable initiating device circuits modules shall monitor only one initiating device each. Contacts in suppression systems and other fire protection subsystems shall be connected to the fire alarm system to perform supervisory and alarm functions as specified in Section 13930 WET PIPE SPRINKLER SYSTEM, FIRE PROTECTION and 13945 PREACTION AND DELUGE SPRINKLER SYSTEMS, FIRE PROTECTION.

3.1.8 Addressable Control Module

Addressable and control modules shall be installed in the outlet box or adjacent to the device they are controlling. All interconnecting wires shall be supervised unless an open circuit or short circuit abnormal condition does not affect the required operation of the fire alarm system. If control modules are used as interfaces to other systems, such as HVAC or elevator control, they shall be within the control panel or immediately adjacent to it. Control modules that control a group of notification appliances shall be adjacent to the first notification appliance in the notification appliance circuits. Control modules that connect to devices shall supervise the notification appliance circuits. Control modules that connect to auxiliary systems or interface with other systems (non-life safety systems) and where not required by NFPA 72, shall not require the secondary circuits to be supervised. Contacts in suppression systems and other fire protection subsystems shall be connected to the fire alarm system to perform required alarm functions as specified in Section 13930 WET PIPE SPRINKLER SYSTEM, FIRE PROTECTION and 13945 PREACTION AND DELUGE SPRINKLER SYSTEMS, FIRE PROTECTION, as indicated on the drawings and as specified herein.

3.2 OVERVOLTAGE AND SURGE PROTECTION

3.2.1 Power Line Surge Protection

All equipment connected to alternating current circuits shall be protected from surges per IEEE C62.41 B3 combination waveform and NFPA 70. Fuses shall not be used for surge protection. The surge protector shall be rated for a maximum let thru voltage of 350 Volts ac (line-to-neutral) and 350 Volt ac (neutral-to-ground).

3.2.2 Low Voltage DC Circuits Surge Protection

All IDC, NAC, and communication cables/conductors, except fiber optics, shall have surge protection installed at each point where it exits or enters a building. Equipment shall be protected from surges per IEEE C62.41 B3 combination waveform and NFPA 70. The surge protector shall be rated to protect the 24 Volt dc equipment. The maximum dc clamping voltages shall be 36 V (line-to-ground) and 72 Volt dc (line-to-line).

3.2.3 Signal Line Circuit Surge Protection

All SLC cables/conductors, except fiber optics, shall have surge protection/isolation circuits installed at each point where it exits or enters a building. The circuit shall be protected from surges per IEEE C62.41 B3 combination waveform and NFPA 70. The surge protector/isolator shall be rated to protect the equipment.

3.3 GROUNDING

Grounding shall be provided by connecting to building ground system.

3.4 TESTING

The Contractor shall notify the Contracting Officer at least 10 days before the preliminary and acceptance tests are to be conducted. The tests shall be performed in accordance with the approved test procedures in the presence of the Contracting Officer. The control panel manufacturer's representative shall be present to supervise tests. The Contractor shall furnish instruments and personnel required for the tests.

3.4.1 Preliminary Tests

Upon completion of the installation, the system shall be subjected to functional and operational performance tests including tests of each installed initiating and notification appliance, when required. Tests shall include the meggering of system conductors to determine that the system is free from grounded, shorted, or open circuits. The megger test shall be conducted prior to the installation of fire alarm equipment. If deficiencies are found, corrections shall be made and the system shall be retested to assure that it is functional. After completing the preliminary testing the Contractor shall complete and submit the NFPA 72, Certificate of Completion.

3.4.2 Acceptance Test

Acceptance testing shall not be performed until the Contractor has completed and submitted the Certificate of Completion. Testing shall be in accordance with NFPA 72. The recommended tests in NFPA 72 shall be considered mandatory and shall verify that previous deficiencies have been corrected. The Contractor shall complete and submit the NFPA 72, Inspection and Testing Form. The test shall include all requirements of NFPA 72 and the following:

a. Test of each function of the control panel.

b. Test of each circuit in both trouble and normal modes.

c. Tests of each alarm initiating devices in both normal and trouble conditions.

d. Tests of each control circuit and device.

e. Tests of each alarm notification appliance.

f. Tests of the battery charger and batteries.

g. Complete operational tests under emergency power supply.

h. Visual inspection of wiring connections.

i. Opening the circuit at each alarm initiating device and notification appliance to test the wiring supervisory feature.

j. Ground fault

k. Short circuit faults

l. Stray voltage

m. Loop resistance

3.5 TRAINING

Training course shall be provided for the operations and maintenance staff. The course shall be conducted in the building where the system is installed or as designated by the Contracting Officer. The training period for systems operation shall consist of 1 training day (8 hours per day) and shall start after the system is functionally completed but prior to final acceptance tests. The training period for systems maintenance shall consist of 2 training days (8 hours per day) and shall start after the system is functionally completed but prior to final acceptance tests. The instructions shall cover items contained in the operating and maintenance instructions. In addition, training shall be provided on performance of expansions or modifications to the fire detection and alarm system. The training period for system expansions and modifications shall consist of at least 1 training day (8 hours per day) and shall start after the system is functionally completed but prior to final acceptance tests.

-- End of Section --

FIRE ALARM SEQUENCE OF OPERATIONS MATRIX

Legend: 1=Activation of supervisory alarm only required. O=Mandatory sequence	System output:	Transmit alarm to Emergency Forces	Transmit Supervisory alarm to Emergency Forces	Transmit Trouble Alarm to Emergency Forces	Activate visible and audible alarm annunciator	Activate visible and audible supervisory annunciator	Activate visible and audible trouble annunciator	Activate all occupant notification appliances	Initiate Special Elevator Recall (see elevator spec)	Open elevator spklr solenoid valve after completion of power shutdown sequence	Release door to close	Activate sounder base alarms in all dwelling units in building	Activate sounder base alarm	Activate all sounder base alarms in only dwelling unit	Shut down air handling fan	Release all doors in stair to close	Initiation devices and occupant notification appliances operation maintained	Initiate Elevator Emergency Recall Phase I	Open preaction/deluge sprinkler valve.	Local sprinkler alarm gong activated upon sprinkler flow
System Input:																				
Sprinkler riser or floor water flow or pressure switch		O			O			O				O								O
Sprinkler valve tamper switch			O			O														
Elevator sprinkler flow switch (Elev mach rm)		O			O			O	O			O								O
Heat detector for Elevator preaction sprinkler system located max 2' from spklr head (Elev mach rm only)		O			O			O	O	O		O								
Loss of voltage to control circuit for the disconnecting elevator power			O			O														
Elevator lobby or Elevator Machine Rm Smoke Detector			O			O												O		
Manual pull station		O			O			O				O								
Smoke Detector for Release of Magnetic Door Holder not protecting stair door opening			O			O					O									
Dwelling unit smoke detector w/sounder base (multiple rooms in dwelling unit)			1			1								O						
Dwelling unit smoke detector w/sounder base (single room type dwelling unit only)			1			1							O							
Single break or ground fault in fire alarm circuit				O			O										O			
Supply duct smoke detector (>2000 CFM)			O			O									O					
Return duct smoke detector (>15000 CFM)			O			O									O					
Smoke detector for release of magnetic door holder protecting stair door opening.			O			O					O					O				
Loss of air pressure in single interlocked preaction sprinkler system			O			O														
Heat detector in single interlocked preaction sprinkler system.		O			O			O				O							O	O

NOTES:
1. This control sequence supercedes any conflicting sequence in the specification or operations matrix shown on the drawings.
2. This is the minimum sequence of operation required for this project. Revision of any sequence must be approved by the Contracting Officer through coordination with the designer and District Fire Protection Engineer.
3. The operation sequence indicated is not complete. Provide other operation sequences in accordance with NFPA 72 and Contract Documents.

SECTION TABLE OF CONTENTS

DIVISION 13 - SPECIAL CONSTRUCTION

SECTION 13852

FIRE ALARM REPORTING SYSTEM, RADIO TYPE

PART 1 GENERAL

1.1 REFERENCES
1.2 GENERAL REQUIREMENTS
1.2.1 Standard Products
1.2.2 Nameplates
1.2.3 Tags
1.2.4 Keys and Locks
1.2.5 Verification of Dimensions
1.2.6 Compliance
1.3 SUBMITTALS
1.4 DELIVERY AND STORAGE
1.5 SYSTEM OPERATION
1.6 ELECTRICAL SUPERVISION

PART 2 PRODUCTS

2.1 RADIO FIRE ALARM TRANSMITTER (TRANSCEIVER)
2.1.1 Frequency Allocation
2.1.2 Power Requirements
2.1.2.1 Battery Power
2.1.2.2 Battery Duration
2.1.2.3 Battery Supervision
2.1.3 Functional Requirements
2.1.3.1 Interfacing Indicators and Controls
2.1.3.2 Generation of Signals
2.1.3.3 Power Output
2.1.3.4 Memory
2.1.3.5 Transmission Confirmation
2.1.3.6 Transmitter Identity Code
2.1.3.7 Message Designations
2.1.4 Transmitter Housings
2.1.4.1 Lock
2.1.4.2 Mounting
2.1.4.3 Operating Panel
2.1.4.4 Labeling
2.1.5 Environmental Operating Requirements
2.1.6 Painting
2.2 RADIO TRANSMITTER INTERFACE DEVICE
2.2.1 Enclosure
2.2.2 Indicators
2.2.3 Access
2.2.4 Mounting
2.2.5 Inputs/Outputs
2.3 FIRE ALARM SYSTEM PERIPHERAL EQUIPMENT
2.3.1 Conduit

2.3.2 Ground Rods
2.3.3 Power Supply
2.3.4 Wiring
2.3.5 Special Tools and Spare Parts

PART 3 EXECUTION

3.1 INSTALLATION
3.1.1 Power Supply for the System
3.1.2 Wiring
3.2 OVERVOLTAGE AND SURGE PROTECTION
3.3 GROUNDING
3.4 TESTING
3.4.1 Performance Testing
3.4.2 Acceptance Test
3.4.3 Training

-- End of Section Table of Contents --

SECTION 13852

FIRE ALARM REPORTING SYSTEM, RADIO TYPE

PART 1 GENERAL

1.1 REFERENCES

The publications listed below form a part of this specification to the extent referenced. The publications are referred to in the text by basic designation only.

CODE OF FEDERAL REGULATIONS (CFR)

47 CFR 15	Radio Frequency Devices

INSTITUTE OF ELECTRICAL AND ELECTRONICS ENGINEERS (IEEE)

IEEE C62.41	(1991) Surge Voltages in Low-Voltage AC Power Circuits

NATIONAL ELECTRICAL MANUFACTURERS ASSOCIATION (NEMA)

NEMA ICS 1	(1993) Industrial Control and Systems

NATIONAL FIRE PROTECTION ASSOCIATION (NFPA)

NFPA 70	(1999) National Electrical Code
NFPA 72	(1999) National Fire Alarm Code

UNDERWRITERS LABORATORIES (UL)

UL FPED	**(2000) Fire Protection Equipment Directory**
UL 6	(1993) Rigid Metal Conduit
UL 467	(1993) Grounding and Bonding Equipment
UL 797	(1993) Electrical Metallic Tubing
UL 1242	(1993; Rev thru July 1993) Intermediate Metal Conduit

1.2 GENERAL REQUIREMENTS

1.2.1 Standard Products

Material and equipment shall be the standard products of a manufacturer regularly engaged in the manufacture of the products and shall essentially duplicate items that have been in satisfactory use for at least 2 years prior to bid opening. Equipment shall be supported by a service organization that can provide service within 24 hours.

1.2.2 Nameplates

Major components of equipment shall have the manufacturer's name, address, type or style, voltage and current rating, and catalog number on a noncorrosive and nonheat-sensitive plate which is securely attached to the equipment.

1.2.3 Tags

Tags with stamped identification numbers shall be furnished for keys and locks.

1.2.4 Keys and Locks

Locks shall be keyed alike.

1.2.5 Verification of Dimensions

The Contractor shall become familiar with all details of the work, verify all dimensions in the field, and shall advise the Contracting Officer of any discrepancy before performing the work.

1.2.6 Compliance

The central reporting system shall comply with NFPA 72. **The equipment furnished shall be UL FPED listed, or Factory Mutual Engineering and Research, or be approved or listed by a nationally recognized testing laboratory.**

1.3 SUBMITTALS

Government approval is required for submittals with a "GA" designation; submittals having an "FI0" designation are for information only. The following shall be submitted in accordance with Section 01330 SUBMITTAL PROCEDURES:

SD-01 Data

Battery; GA.

Substantiating battery calculations for supervisory and alarm power requirements. Ampere-hour requirements for each system component, each panel component and the battery recharging period shall be included.

Spare Parts; FIO.

Spare parts data for each different item of material and equipment specified, after approval of detail drawings, and not later than 2 months prior to the date of beneficial occupancy. Data shall include a complete list of parts and supplies with the current unit prices and source of supply and a list of the parts recommended by the manufacturer to be replaced after 1 year of service.

Qualifications; GA.

Qualifications, with verification of experience and license number, of a Registered Professional Engineer with at least 4 years of current experience in the design of fire protection and detection systems. This engineer must perform the various specification items required by this section to be performed by a Registered Professional Engineer.

SD-04 Drawings

Fire Alarm Reporting System; GA.

Detail drawings, signed by the Registered Professional Engineer, consisting of a complete list of equipment and material, including manufacturer's descriptive and technical literature, catalog cuts, and installation instructions. Note that the contract drawings show layouts based on typical detectors. The contractor shall check the layout based on the actual detectors to be installed and make any necessary revisions in the detail drawings. Detail drawings shall also contain complete wiring and schematic diagrams for the equipment furnished, equipment layout, and any other details required to demonstrate that the system has been coordinated and will properly function as a unit.

Wiring Diagrams; GA.

Detail point-to-point wiring diagram, signed by the Registered Professional Engineer, showing all points of connection. Diagram shall include connections between system devices, appliances, control panels, supervised devices, an all equipment that is activated or controlled by the panel.

SD-06 Instructions

Fire Alarm Reporting System; GA.

Six complete copies of operating instructions outlining step-by-step procedures required for system startup, operation, and shutdown. The instructions shall include the manufacturer's name, model number, service manual, parts list, and brief description of all equipment and their basic operating features. Six copies of maintenance instructions listing routine maintenance procedures, possible breakdowns and repairs, and troubleshooting guide. The instructions shall include conduit layout, equipment layout and simplified wiring, and control diagrams of the system as installed. Instructions shall be approved prior to training.

Training; FIO.

Training course for the operation and maintenance staff. The course shall be conducted in the building where the system is installed or as designated by the Contracting Officer. The training period shall consist of 3 training days (8 hours per day) and shall start after the system is functionally completed but prior to final acceptance tests. The instructions shall cover all of the items contained in the operating and maintenance instructions.

SD-08 Statements

Test Procedures; GA.

Detailed test procedures for the fire alarm reporting system 60 days prior to performing system tests. The test procedures shall be signed by the Registered Professional Engineer.

SD-09 Reports

Testing; GA.

Test reports in booklet form showing all field tests performed to prove compliance with the specified performance criteria, upon completion and testing of the installed system. Each test report shall document all readings, test results and indicate the final position of controls.

SD-13 Certificates

Equipment; GA.

Certified copies of current applicable approvals or listings issued by UL, FM or other nationally recognized testing laboratory showing compliance with applicable NFPA standards.

1.4 DELIVERY AND STORAGE

All equipment delivered and placed in storage shall be protected from the weather, humidity and temperature variations, dirt, dust, and other contaminants.

1.5 SYSTEM OPERATION

The radio system shall report alarms to the radio fire alarm monitoring base station. The system shall be a completely supervised radio type fire alarm reporting system. The system shall indicate the area of alarm. The radio communication link shall be supervised and operated in accordance with NFPA 72.

1.6 ELECTRICAL SUPERVISION

Electrical supervision shall be provided for all circuits and for all positions of interface panel control switches.

PART 2 PRODUCTS

2.1 RADIO FIRE ALARM TRANSMITTER (TRANSCEIVER)

Radio Fire Alarm Transmitter (Transceiver) shall be compatible with the Radio Fire Alarm Monitoring Base Station. It shall be all solid state and comply with all applicable portions of 47 CFR 15 governing type acceptance. All transmitters of a common configuration shall be interchangeable with the other devices furnished by the manufacturer. Each transmitter and interface device shall be the manufacturer's current commercial product completely assembled, wired, tested at the factory, and delivered ready for installation and operation.

2.1.1 Frequency Allocation

The transmitters shall operate on a frequency of 140.3 MHz.

2.1.2 Power Requirements

Transmitters shall be powered by a combination of locally available 120 Vac, and sealed nickel-cadium or lead-acid type batteries requiring no additional water. In the event of loss of 120 Vac power, the transmitter shall automatically switch to battery operation. The switchover shall be accomplished with no interruption of protective service, without adversely affecting the battery-powered capabilities, and shall cause the transmission of a trouble message in no less than 10 seconds. Upon restoration of ac power, transfer back to normal ac power supply shall be

automatic and the battery shall be recharged. The converter/battery charger shall be installed within the transmitter housing. Power supply transient filtering shall be provided.

2.1.2.1 Battery Power

The battery package shall be capable of supplying all the power requirements for a given transmitter.

2.1.2.2 Battery Duration

Radio fire alarm transmitter standby battery capacity shall provide sufficient power to operate the transmitter in a normal standby status for a minimum of 60 hours and shall be capable of transmitting alarms during that period. The capacity for battery-only powered transmitters shall be 6 months before recharging is necessary.

2.1.2.3 Battery Supervision

Each radio fire alarm transmitter shall constantly monitor and supervise its own battery powered supply. A low-battery condition shall be reported when battery voltage falls below 85 percent of the rated voltage.

2.1.3 Functional Requirements

2.1.3.1 Interfacing Indicators and Controls

Transmitters shall incorporate the provisions for auxiliary interconnection to existing or new interior alarm systems.

2.1.3.2 Generation of Signals

Each transmitter shall be a standard design which allows the immediate transmission of all initiated signals.

2.1.3.3 Power Output

The radio frequency (RF) power output of each transmitter shall be sufficient for reliable alarm reporting. The minimum RF power output shall be 1 watt.

2.1.3.4 Memory

Transmitters shall have memory capability. Multiple, simultaneous alarms shall not result in the loss of any messages. All such messages shall be stored until they are transmitted.

2.1.3.5 Transmission Confirmation

When a signal is initiated at a public box (push button or pull lever), the transmitter shall produce an audible or visual indication that the transmitter is operating and that a signal is being sent.

2.1.3.6 Transmitter Identity Code

Each transmitter shall transmit a distinct identity code number as part of all signals emanating from the transmitter. The identity code shall allow for no less than a 5 digit code selection and be transmitted not less than three complete rounds (cycles).

2.1.3.7 Message Designations

Each transmitter shall allow as a minimum no less than 10 distinct and individually identifiable message designations as to the types or causes of transmitter actuation.

a. Master Message: Master messages shall be transmitted upon automatic actuation of the transmitter. The building and zone causing actuation shall be individually identified as part of this transmission. The transmitter shall be capable of identifying and transmitting a minimum of 8 master (zone) messages.

b. Test Message: Test message shall be capable of both manual and automatic actuation. When a transceiver method is employed, it shall provide for automatic interrogation at preselected periods or continuous automatic interrogation in accordance with the governing standard. Additionally, transceiver systems shall provide for selective interrogation at times determined by the user. Testing the automatic test actuation shall occur a minimum of once in each 24-hour period, at an optionally preselected time. Stability of the electronic actuating device shall be plus or minus 1 minute per month within the temperature range stipulated for system operation. Actuation of the "Test" message designation, regardless of initiating means, shall cause no less than one complete message to be sent.

c. Tamper Message Designation: This message shall be automatically transmitted when a tamper switch is tripped in the transmitter housing.

d. Trouble Message Designation: Trouble message shall be automatically transmitted in the event of a failure in excess of 1 minute of the main operating power source of the transmitter.

2.1.4 Transmitter Housings

The housings on transmitters shall be fabricated from corrosion-resistant cast metal or suitable substitute which has the physical strength sufficient to ward off physical damage normally expected to be received by vandalism. The housing shall be sealed against the entry of moisture, dust, dirt, insects, and other foreign objects. Exterior housings shall be NEMA 4X.

2.1.4.1 Lock

Internal components shall be protected from vandalism by a tamper-proof lock on the transmitter housing. The housing shall allow access to all internal components for testing, servicing, and replacement at the installation site.

2.1.4.2 Mounting

Transmitter housings shall be designed for universal mounting on walls, poles, or pedestals. Mounting shall utilize either lag bolts, anchor bolts, stainless steel banding, mounting brackets, or a shackle/bolt combination, as applicable to the specific installation.

2.1.4.3 Operating Panel

Each publicly accessible transmitter shall have an operating panel that incorporates a dedicated signal initiating device (pull hook or push button) clearly identified for the initiation of "FIRE" signals. The device shall be protected with a conventional spring-loaded, "fast-action" break-glass, or similar pull-type door that allows observation of the actuation device when in the closed position. The door shall be fabricated and finished in a manner consistent with that required of the main housing.

2.1.4.4 Labeling

Each publicly accessible transmitter shall be labeled on both sides and on the front surface with the word "FIRE." The label shall be white with red lettering.

2.1.5 Environmental Operating Requirements

The transmitter shall be designed for reliable outside operation in an ambient temperature range of minus 30 degrees C (minus 22 degrees F) to plus 60 degrees C (plus 140 degrees F). Transmitters shall be corrosion-resistant and designed for reliable operation under adverse climatic conditions including 160.9 km/hour (100 mph) winds, ice, rain, and snow storms.

2.1.6 Painting

Radio fire alarm transmitter and interface housings shall be factory painted. The finish color shall be fire engine red. All painted surfaces damaged during installation shall be repainted to match existing paint.

2.2 RADIO TRANSMITTER INTERFACE DEVICE

The interface device shall provide a means of converting whatever signals that are available from the local control equipment into a form that is compatible with the transmitter inputs while still maintaining electrical supervision of the entire system. Interface devices shall be utilized whenever direct connection between local control equipment and the transmitter is not possible. Interface devices shall be completely assembled, wired, tested at the factory, and delivered ready for installation and operation.

2.2.1 Enclosure

When furnished as an independent self-contained device, the interface device shall be incorporated into an enclosure conforming to NEMA ICS 1 or other national standard as required by its location.

2.2.2 Indicators

Indicators shall be provided to indicate alarm and trouble conditions and shall consist of a red fire alarm and an amber trouble light. The indicators shall be designed to ensure visibility during daylight hours and to indicate the reporting zone.

2.2.3 Access

Switches and other controls shall not be accessible without the use of a key. Access to controls shall be by unlocking and opening a panel or door.

2.2.4 Mounting

Interface housings shall be designed for universal mounting on walls, poles, or pedestals. Mounting shall utilize either lag bolts, anchor bolts, stainless steel banding, mounting brackets, or a shackle/bolt combination, as applicable to the specific installation.

2.2.5 Inputs/Outputs

Each interface panel shall provide as a minimum the number of alarm circuit inputs and outputs indicated. Each input circuit shall be arranged so that the alarm signals shall override the trouble signals.

2.3 FIRE ALARM SYSTEM PERIPHERAL EQUIPMENT

2.3.1 Conduit

Conduit and fittings shall comply with UL 6, UL 1242, and UL 797.

2.3.2 Ground Rods

Ground rods shall be of copper-clad steel conforming to UL 467 not less than 19.1 mm (3/4 inch) in diameter by 3.048 m (10 feet) in length.

2.3.3 Power Supply

The operating power for the system shall be single phase taken from the building electric service as specified in paragraph Power Supply for the System. Emergency backup power shall be provided by sealed lead-acid or nickel-calcium type batteries requiring no additional water. The charging system shall recharge fully discharged batteries within 12 hours and maintain the batteries in the fully charged state. The battery shall have the capacity to operate the system for not less than 48 hours under maximum normal load with the power supply to the charger disconnected.

2.3.4 Wiring

Wiring shall be in accordance with NFPA 70 and as indicated. All station wiring shall be color coded.

2.3.5 Special Tools and Spare Parts

Special tools necessary for the maintenance of the equipment shall be furnished. One spare set of fuses of each type and size required and five spare lamps of each type shall be furnished.

PART 3 EXECUTION

3.1 INSTALLATION

All work shall be installed as shown and in accordance with the manufacturer's recommendations, unless otherwise specified. All necessary interconnections, services, and adjustments required for a complete and operational system shall be provided. Electrical work shall be in accordance with NFPA 70.

3.1.1 Power Supply for the System

A single dedicated branch-circuit connection for supplying power to the

fire alarm system shall be provided. The backup power supply shall be automatically energized upon failure of the normal power supply.

3.1.2 Wiring

Wiring for systems shall be installed in rigid conduit or electric metallic tubing. The conductors for the fire alarm system shall not be installed in conduits, junction boxes, or outlet boxes with conductors of lighting and power systems. The sum of the cross-sectional areas of individual conductors shall not exceed 40 percent of the interior cross-sectional area of the conduit. Conduit shall comply with NFPA 70. Ample gutter space to accommodate necessary wiring shall be provided.

3.2 OVERVOLTAGE AND SURGE PROTECTION

All equipment connected to alternating current circuits shall be protected from surges per IEEE C62.41 and NFPA 70. All cables and conductors which serve as communications links, except fiber optics, shall have surge protection circuits installed at each end. Fuses shall not be used for surge protection.

3.3 GROUNDING

Ground rods shall not protrude more than 150 mm above grade. Noncurrent-carrying metallic parts associated with radio fire alarm equipment shall have a maximum resistance to solid "earth" ground not to exceed 25 ohms.

3.4 TESTING

The Contractor shall notify the Contracting Officer 30 days before the performance and acceptance tests are to be conducted. The tests shall be performed in the presence of the Contracting Officer under the supervision of the fire alarm system manufacturer's qualified representative. The Contractor shall furnish all instruments and personnel required for the tests.

3.4.1 Performance Testing

Upon completion of the installation, the system shall be subjected to a complete functional and operational performance test by the Contractor. Test shall determine that the system is free from grounded, shorted, or open circuits. When all corrections have been made, the system shall be retested to assure that it is functional. Copies of performance test reports shall be submitted in accordance with paragraph SUBMITTALS.

3.4.2 Acceptance Test

The testing shall be in accordance with NFPA 72. The recommended tests in NFPA 72 shall be considered mandatory and shall verify that all previous deficiencies have been corrected. The tests shall include the following:

a. Tests to indicate there are no grounded, shorted, or open circuits.

b. Tests of each radio fire alarm transmitter/receiver/transceiver/repeater.

c. Tests of radio fire alarm monitoring base station for all required functions.

d. Tests of normal and emergency power supplies.

3.4.3 Training

The Contractor shall conduct a training course for operating staff in the building where the system is installed as designated by the Contracting Officer. The training period shall consist of 3 training days, 8 hours per day and shall start after the system is functionally completed but prior to the final acceptance tests. The field instructions shall cover all of the items contained in the approved operating and maintenance instructions.

-- End of Section --

SECTION TABLE OF CONTENTS

DIVISION 15 - MECHANICAL

SECTION 15400

PLUMBING, GENERAL PURPOSE

PART 1 GENERAL

1.1 REFERENCES
1.2 STANDARD PRODUCTS
1.3 PERFORMANCE REQUIREMENTS
1.4 ELECTRICAL WORK
1.5 SUBMITTALS
1.6 REGULATORY REQUIREMENTS
1.7 PROJECT/SITE CONDITIONS

PART 2 PRODUCTS

2.1 MATERIALS
2.1.1 Pipe Joint Materials
2.1.2 Miscellaneous Materials
2.1.3 Pipe Insulation Material
2.2 PIPE HANGERS, INSERTS, AND SUPPORTS
2.3 VALVES
2.3.1 Hose Bibs
2.3.2 Lawn Faucets
2.3.3 Relief Valves
2.3.4 Thermostatic Mixing Valves
2.3.5 Pressure Reducing Valves
2.4 FIXTURES
2.4.1 Lavatories
2.4.2 Automatic Flushing System
2.5 BACKFLOW PREVENTERS
2.6 DRAINS
2.6.1 Floor and Shower Drains
2.6.1.1 Drains and Backwater Valves
2.6.2 Area Drains
2.6.3 Floor Sinks
2.7 TRAPS
2.8 GREASE INTERCEPTOR
2.9 WATER HEATERS
2.9.1 Automatic Storage Type
2.9.1.1 Gas-Fired Type
2.9.1.2 Electric Type
2.9.2 Electric Booster Heater
2.10 HOT-WATER STORAGE TANKS
2.11 EXPANSION TANKS
2.12 PUMPS
2.12.1 Sump Pumps
2.12.2 Circulating Pumps
2.12.3 Flexible Connectors
2.13 PLATE HEAT EXCHANGER
2.14 FOOD SERVICE EQUIPMENT

2.15 LEAK DETECTION SYSTEM FOR WATER
2.15.1 Operation
2.15.2 Installation

PART 3 EXECUTION

3.1 GENERAL INSTALLATION REQUIREMENTS
3.1.1 Water Pipe, Fittings, and Connections
3.1.1.1 Utilities
3.1.1.2 Cutting and Repairing
3.1.1.3 Protection of Fixtures, Materials, and Equipment
3.1.1.4 Mains, Branches, and Runouts
3.1.1.5 Pipe Drains
3.1.1.6 Expansion and Contraction of Piping
3.1.1.7 Commercial-Type Water Hammer Arresters
3.1.2 Joints
3.1.2.1 Threaded
3.1.2.2 Union and Flanged
3.1.2.3 Cast Iron Soil, Waste and Vent Pipe
3.1.2.4 Copper Tube and Pipe
3.1.3 Dissimilar Pipe Materials
3.1.4 Pipe Sleeves and Flashing
3.1.4.1 Sleeve Requirements
3.1.4.2 Flashing Requirements
3.1.4.3 Waterproofing
3.1.4.4 Optional Counterflashing
3.1.4.5 Pipe Penetrations of Slab on Grade Floors
3.1.5 Fire Seal
3.1.6 Supports
3.1.6.1 General
3.1.6.2 Pipe Supports and Structural Bracing, Seismic Requirements
3.1.6.3 Pipe Hangers, Inserts, and Supports
3.1.7 Pipe Cleanouts
3.2 WATER HEATERS AND HOT WATER STORAGE TANKS
3.2.1 Relief Valves
3.2.2 Installation of Gas- Fired Water Heater
3.2.3 Heat Traps
3.2.4 Connections to Water Heaters
3.3 FIXTURES AND FIXTURE TRIMMINGS
3.3.1 Fixture Connections
3.3.2 Flushometer Valves
3.3.3 Height of Fixture Rims Above Floor
3.3.4 Shower Bath Outfits
3.3.5 Fixture Supports
3.3.5.1 Support for Solid Masonry Construction
3.3.5.2 Support for Cellular-Masonry Wall Construction
3.3.5.3 Support for Steel Stud Frame Partitions
3.3.6 Backflow Prevention Devices
3.3.7 Access Panels
3.3.8 Sight Drains
3.3.9 Traps
3.4 VIBRATION-ABSORBING FEATURES
3.5 IDENTIFICATION SYSTEMS
3.5.1 Identification Tags
3.5.2 Color Coding
3.6 ESCUTCHEONS
3.7 PAINTING
3.8 TESTS, FLUSHING AND DISINFECTION
3.8.1 Plumbing System

3.8.1.1 Test of Backflow Prevention Assemblies
3.8.2 Defective Work
3.8.3 System Flushing
3.8.4 Operational Test
3.8.5 Disinfection
3.9 PLUMBING FIXTURE SCHEDULE
3.9.1 Company Operations Facilities (COF-2)
3.9.2 Company Operations Facilities (COF-3 to COF-7)
3.9.3 PLUMBING FIXTURE SCHEDULE FOR SOLDIER COMMUNITY BUILDING
3.9.4 PLUMBING FIXTURE SCHEDULE FOR REMOTE SWITCHING CENTER BUILDING
3.9.5 PLUMBING FIXTURE SCHEDULE FOR TRAINING FACILITY
3.9.6 PLUMBING FIXTURE SCHEDULE FOR BARRACKS BUILDING ("BK-1" and "BK-2")
3.9.7 PLUMBING FIXTURE SCHEDULE FOR BATTALION HEADQUARTERS BUILDING ("BN-1" and "BN-2")
3.9.8 Plumbing Fixture Schedule for Dining Facility (DN-1)
3.9.9 Plumbing Fixture Schedule For Central Plant Building
3.10 POSTED INSTRUCTIONS
3.11 PERFORMANCE OF WATER HEATING EQUIPMENT
3.11.1 Storage Water Heaters
3.11.1.1 Electric
3.11.1.2 Gas
3.11.2 Unfired Hot Water Storage
3.12 FOOD SERVICE EQUPMENT FOR DINING FACILITY DN-1
3.13 TABLES

-- End of Section Table of Contents --

SECTION 15400

PLUMBING, GENERAL PURPOSE

PART 1 GENERAL

1.1 REFERENCES

The publications listed below form a part of this specification to the extent referenced. The publications are referred to in the text by basic designation only.

AIR CONDITIONING AND REFRIGERATION INSTITUTE (ARI)

ARI 700	(1995) Specifications for Fluorocarbon and Other Refrigerants
ARI 1010	(1994) Self-Contained, Mechanically-Refrigerated Drinking-Water Coolers

AMERICAN NATIONAL STANDARDS INSTITUTE (ANSI)

ANSI Z21.10.1	(1993; Z21.10.1a; Z21.10.1b; Z21.10.1c) Gas Water Heaters Vol. I Storage Water Heaters with Input Ratings of 75,000 Btu Per Hour or Less
ANSI Z21.10.3	(1993; Z21.10.3a; Z21.10.3b) Gas Water Heaters Vol. III Storage, With Input Ratings Above 75,000 Btu Per Hour, Circulating and Instantaneous Water Heaters
ANSI Z21.22	(1986; Z21.22a) Relief Valves and Automatic Gas Shutoff Devices for Hot Water Supply Systems

AMERICAN SOCIETY FOR TESTING AND MATERIALS (ASTM)

ASTM A 53	(1997) Pipe, Steel, Black and Hot-Dipped, Zinc-Coated, Welded and Seamless
ASTM A 74	(1996) Cast Iron Soil Pipe and Fittings
ASTM A 105/A 105M	(1996) Carbon Steel Forgings for Piping Applications
ASTM A 193/A 193M	(1997a) Alloy-Steel and Stainless Steel Bolting Materials for High-Temperature Service
ASTM A 515/A 515M	(1992) Pressure Vessel Plates, Carbon Steel, for Intermediate- and Higher-Temperature Service

ASTM A 516/A 516M	(1990; R 1996) Pressure Vessel Plates, Carbon Steel, for Moderate- and Lower-Temperature Service
ASTM A 733	(1993) Welded and Seamless Carbon Steel and Austenitic Stainless Steel Pipe Nipples
ASTM A 888	(1996) Hubless Cast Iron Soil Pipe and Fittings for Sanitary and Storm Drain, Waste, and Vent Piping Applications
ASTM B 32	(1996) Solder Metal
ASTM B 88	(1996) Seamless Copper Water Tube
ASTM B 88M	(1996) Seamless Copper Water Tube (Metric)
ASTM B 370	(1992) Copper Sheet and Strip for Building Construction
ASTM B 641	(1993) Seamless and Welded Copper Distribution Tube (Type D)
ASTM B 813	(1993) Liquid and Paste Fluxes for Soldering Applications of Copper and Copper Alloy Tube
ASTM B 828	(1992) Making Capillary Joints by Soldering of Copper and Copper Alloy Tube and Fittings
ASTM C 564	(1995a) Rubber Gaskets for Cast Iron Soil Pipe and Fittings
ASTM C 920	(1995) Elastomeric Joint Sealants
ASTM D 2822	(1991; R 1997) Asphalt Roof Cement
ASTM D 3308	(1991a) PTFE Resin Skived Tape
ASTM D 3311	(1994) Drain, Waste, and Vent (DWV) Plastic Fittings Patterns
ASTM E 1	(1995) ASTM Thermometers
ASTM F 409	(1995) Thermoplastic Accessible and Replaceable Plastic Tube and Tubular Fittings

AMERICAN SOCIETY OF HEATING, REFRIGERATING AND AIR-CONDITIONING ENGINEERS (ASHRAE)

ASHRAE 34	(1992; Addenda a-j) Number Designation and Safety Classification of Refrigerants
ASHRAE 90.1	(1989; 90.1b; 90.1c; 90.1d; 90.1e; 90.1g; 90.1i) Energy Efficient Design of New Buildings Except Low-Rise Residential

Buildings

ASME INTERNATIONAL (ASME)

ASME A112.1.2	(1991) Air Gaps in Plumbing Systems
ASME A112.6.1M	(1997) Supports for Off-the-Floor Plumbing Fixtures for Public Use
ASME A112.18.1M	(1996) Plumbing Fixture Fittings
ASME A112.19.1M	(1994) Enameled Cast Iron Plumbing Fixtures
ASME A112.19.2M	(1995; Errata) Vitreous China Plumbing Fixtures
ASME A112.19.3M	(1987; R 1996) Stainless Steel Plumbing Fixtures (Designed for Residential Use)
ASME A112.19.4M	(1994; Errata Nov 1996) Porcelain Enameled Formed Steel Plumbing Fixtures
ASME A112.21.1M	(1991) Floor Drains
ASME A112.36.2M	(1991) Cleanouts
ASME B1.20.1	(1983; R 1992) Pipe Threads, General Purpose (Inch)
ASME B16.3	(1992) Malleable Iron Threaded Fittings
ASME B16.4	(1992) Gray Iron Threaded Fittings
ASME B16.5	(1996) Pipe Flanges and Flanged Fittings NPS 1/2 thru NPS 24
ASME B16.12	(1991) Cast Iron Threaded Drainage Fittings
ASME B16.15	(1985; R 1994) Cast Bronze Threaded Fittings Classes 125 and 250
ASME B16.18	(1984; R 1994) Cast Copper Alloy Solder Joint Pressure Fittings
ASME B16.21	(1992) Nonmetallic Flat Gaskets for Pipe Flanges
ASME B16.34	(1996) Valves - Flanged, Threaded, and Welding End
ASME B16.39	(1986; R 1994) Malleable Iron Threaded Pipe Unions Classes 150, 250, and 300
ASME B31.5	(1992; B31.5a) Refrigeration Piping
ASME B36.19M	(1985; R1994) Stainless Steel Pipe
ASME B40.1	(1991) Gauges - Pressure Indicating Dial Type - Elastic Element

ASME BPV VIII Div 1	(1998) Boiler and Pressure Vessel Code; Section VIII, Pressure Vessels Division 1 - Basic Coverage
ASME CSD-1	(1995; CSD-1a; CSD-1b) Controls and Safety Devices for Automatically Fired Boilers

AMERICAN SOCIETY OF SANITARY ENGINEERING (ASSE)

ASSE ANSI/ASSE 1001	(1990) Pipe Applied Atmospheric Type Vacuum Breakers
ASSE 1002	(1986) Water Closet Flush Tank Ball Cocks
ASSE ANSI/ASSE 1003	(1995) Water Pressure Reducing Valves for Domestic Water Supply Systems
ASSE 1005	(1986) Water Heater Drain Valves - 3/4-Inch Iron Pipe Size
ASSE ANSI/ASSE 1006	(1989) Residential Use (Household) Dishwashers
ASSE ANSI/ASSE 1011	(1995) Hose Connection Vacuum Breakers
ASSE ANSI/ASSE 1012	(1995) Backflow Preventers with Intermediate Atmospheric Vent
ASSE 1013	(1993) Reduced Pressure Principle Backflow Preventers
ASSE 1018	(1986) Trap Seal Primer Valves Water Supply Fed
ASSE ANSI/ASSE 1037	(1986; Rev thru Mar 1990) Pressurized Flushing Devices (Flushometers) for Plumbing Fixtures
ASSE 1037	(1990) Performance Requirement for Pressurized Flushing Devices (Flushometers) for Plumbing Fixtures

AMERICAN WATER WORKS ASSOCIATION (AWWA)

AWWA-01	(1995) Standard Methods for the Examination of Water and Wastewater
AWWA B300	(1992) Hypochlorites
AWWA B301	(1992) Liquid Chlorine
AWWA C203	(1991) Coal-Tar Protective Coatings and Linings for Steel Water Pipelines - Enamel and Tape - Hot-Applied
AWWA C606	(1987) Grooved and Shouldered Joints
AWWA D100	(1996) Welded Steel Tanks for Water Storage

AWWA M20	(1973) Manual: Water Chlorination Principles and Practices

AMERICAN WELDING SOCIETY (AWS)

AWS A5.8	(1992) Filler Metals for Brazing and Braze Welding
AWS B2.2	(1991) Brazing Procedure and Performance Qualification

CAST IRON SOIL PIPE INSTITUTE (CISPI)

CISPI 301	(1995) Hubless Cast Iron Soil Pipe and Fittings for Sanitary and Storm Drain, Waste, and Vent Piping Applications
CISPI 310	(1995) Coupling for Use in Connection with Hubless Cast Iron Soil Pipe and Fittings for Sanitary and Storm Drain, Waste, and Vent Piping Applications
CISPI HSN-85	(1985) Neoprene Rubber Gaskets for Hub and Spigot Cast Iron Soil Pipe and Fittings

CODE OF FEDERAL REGULATIONS (CFR)

10 CFR 430	Energy Conservation Program for Consumer Products

COMMERCIAL ITEM DESCRIPTIONS (CID)

CID A-A-238	(Rev B) Seat, Water Closet
CID A-A-240	(Rev A) Shower Head, Ball Joint

COPPER DEVELOPMENT ASSOCIATION (CDA)

CDA-02	(1995) Copper Tube Handbook

COUNCIL OF AMERICAN BUILDING OFFICIALS (CABO)

CABO A117.1	(1992; Errata Jun 1993) Accessible and Usable Buildings and Facilities

FOUNDATION FOR CROSS-CONNECTION CONTROL AND HYDRAULIC RESEARCH (FCCHR)

FCCCHR-01	(1993) Manual of Cross-Connection Control

HYDRAULIC INSTITUTE (HI)

HI ANSI/HI 1.1-1.5	(1994) Centrifugal Pumps

INTERNATIONAL ASSOCIATION OF PLUMBING AND MECHANCIAL OFFICIALS

IAPMO ANSI/IAPMO Z124.1	(1995) Plastic Bathtub Units

IAPMO ANSI/IAPMO Z124.5	(1997) Plastic Toilet (Water Closets) Seats

MANUFACTURERS STANDARDIZATION SOCIETY OF THE VALVE AND FITTINGS INDUSTRY (MSS)

MSS SP-25	(1998) Standard Marking System for Valves, Fittings, Flanges and Unions
MSS SP-58	(1993) Pipe Hangers and Supports - Materials, Design and Manufacture
MSS SP-69	(1996) Pipe Hangers and Supports - Selection and Application
MSS SP-70	(1990) Cast Iron Gate Valves, Flanged and Threaded Ends
MSS SP-71	(1997) Cast Iron Swing Check Valves, Flanges and Threaded Ends
MSS SP-72	(1992) Ball Valves with Flanged or Butt-Welding Ends for General Service
MSS SP-73	(1991; R 1996) Brazing Joints for Copper and Copper Alloy Pressure Fittings
MSS SP-78	(1987; R 1992) Cast Iron Plug Valves, Flanged and Threaded Ends
MSS SP-80	(1997) Bronze Gate, Globe, Angle and Check Valves
MSS SP-83	(1995) Class 3000 Steel Pipe Unions Socket-Welding and Threaded
MSS SP-85	(1994) Cast Iron Globe & Angle Valves, Flanged and Threaded Ends
MSS SP-110	(1996) Ball Valves Threaded, Socket-Welding, Solder Joint, Grooved and Flared Ends

NATIONAL ASSOCIATION OF PLUMBING-HEATING-COOLING CONTRACTORS (NAPHCC)

NAPHCC-01	(1996) National Standard Plumbing Code

NATIONAL ELECTRICAL MANUFACTURERS ASSOCIATION (NEMA)

NEMA 250	(1991) Enclosures for Electrical Equipment (1000 Volts Maximum)

NATIONAL FIRE PROTECTION ASSOCIATION (NFPA)

NFPA NFPA 54/ANSI Z223.1	(1996; Errata) National Fuel Gas Code
NFPA 90A	(1996) Installation of Air Conditioning and Ventilating Systems

PLUMBING AND DRAINAGE INSTITUTE (PDI)

PDI G-101	(1996) Testing and Rating Procedure for Grease Interceptors with Appendix of Sizing and Installation Data
PDI WH 201	(1992) Water Hammer Arresters

SOCIETY OF AUTOMOTIVE ENGINEERS (SAE)

SAE J 1508	(1996) Hose Clamps

UNDERWRITERS LABORATORIES (UL)

UL 174	(1996; Rev thru Nov 1997) Household Electric Storage Tank Water Heaters
UL 430	(1994; Rev thru Oct 1996) Waste Disposers
UL 749	(1997) Household Dishwashers

1.2 STANDARD PRODUCTS

Specified materials and equipment shall be standard products of a manufacturer regularly engaged in the manufacture of such products. Specified equipment shall essentially duplicate equipment that has performed satisfactorily at least two years prior to bid opening.

1.3 PERFORMANCE REQUIREMENTS

1.4 ELECTRICAL WORK

Motors, motor controllers and motor efficiencies shall conform to the requirements of Section 16415 ELECTRICAL WORK, INTERIOR. Electrical motor-driven equipment specified herein shall be provided complete with motors. Equipment shall be rated at 60 Hz, single phase, ac unless otherwise indicated. Where a motor controller is not provided in a motor-control center on the electrical drawings, a motor controller shall be as indicated. Motor controllers shall be provided complete with properly sized thermal-overload protection in each ungrounded conductor, auxiliary contact, and other equipment, at the specified capacity, and including an allowable service factor.

1.5 SUBMITTALS

Government approval is required for submittals with a "GA" designation; submittals having an "FIO" designation are for information only. The following shall be submitted in accordance with Section 01330 SUBMITTAL PROCEDURES:

SD-01 Data

Vibration-Absorbing Features; FIO.

Details of vibration-absorbing features, including arrangement, foundation plan, dimensions and specifications.

SD-04 Drawings

Plumbing System; FIO.

Detail drawings consisting of illustrations, schedules, performance charts, instructions, brochures, diagrams, and other information to illustrate the requirements and operations of each system. Detail drawings for the complete plumbing system including piping layouts and locations of connections; dimensions for roughing-in, foundation, and support points; schematic diagrams and wiring diagrams or connection and interconnection diagrams. Detail drawings shall indicate clearances required for maintenance and operation. Where piping and equipment are to be supported other than as indicated, details shall include loadings and proposed support methods. Mechanical drawing plans, elevations, views, and details, shall be drawn to scale.

Electrical Schematics; FIO.

Complete electrical schematic lineless or full line interconnection and connection diagram for each piece of mechanical equipment having more than one automatic or manual electrical control device.

SD-06 Instructions

Plumbing System; FIO.

Diagrams, instructions, and other sheets proposed for posting. Manufacturer's recommendations for the installation of bell and spigot and hubless joints for cast iron soil pipe.

SD-09 Reports

Tests, Flushing and Disinfection; FIO.

Test reports in booklet form showing all field tests performed to adjust each component and all field tests performed to prove compliance with the specified performance criteria, completion and testing of the installed system. Each test report shall indicate the final position of controls.

Backflow Prevention Assembly Tests; FIO.

Certification of proper operation shall be as accomplished in accordance with state regulations by an individual certified by the state to perform such tests. If no state requirement exists, the Contractor shall have the manufacturer's representative test the device, to ensure the unit is properly installed and performing as intended. The Contractor shall provide written documentation of the tests performed and signed by the individual performing the tests.

SD-13 Certificates

Materials and Equipment; FIO.

Where materials or equipment are specified to comply with requirements of AGA, or ASME, proof of such compliance. The label or listing of the specified agency will be acceptable evidence. In lieu of the label or listing, a written certificate may be submitted from an approved, nationally recognized testing organization equipped to perform such services, stating that the items have been tested and conform to the requirements and testing methods of the specified agency. Where equipment

is specified to conform to requirements of the ASME Boiler and Pressure Vessel Code, the design, fabrication, and installation shall conform to the code.

Bolts; FIO.

Written certification by the bolt manufacturer that the bolts furnished comply with the specified requirements. The certification shall include illustrations of product-required markings, the date of manufacture, and the number of each type of bolt to be furnished based on this certification.

SD-19 Operation and Maintenance Manuals

Plumbing System; FIO.

Six copies of the operation manual outlining the step-by-step procedures required for system startup, operation and shutdown. The manual shall include the manufacturer's name, model number, service manual, parts list, and brief description of all equipment and their basic operating features. Six copies of the maintenance manual listing routine maintenance procedures, possible breakdowns and repairs. The manual shall include piping and equipment layout and simplified wiring and control diagrams of the system as installed. Instructions and maintenance manuals shall be submitted for approval 30 days following CQC approval of equipment/materials.

1.6 REGULATORY REQUIREMENTS

Plumbing work shall be in accordance with NAPHCC-01.

1.7 PROJECT/SITE CONDITIONS

The Contractor shall become familiar with details of the work, verify dimensions in the field, and advise the Contracting Officer of any discrepancy before performing any work.

PART 2 PRODUCTS

2.1 MATERIALS

Materials for various services shall be in accordance with TABLES I and II. Pipe schedules shall be selected based on service requirements. Pipe fittings shall be compatible with the applicable pipe materials. Pipe threads (except dry seal) shall conform to ASME B1.20.1. Material or equipment containing lead shall not be used in any potable water system. Hubless cast-iron soil pipe shall not be installed underground, under concrete floor slabs, or in crawl spaces below kitchen floors.

2.1.1 Pipe Joint Materials

Hubless cast-iron soil pipe shall not be used under ground. Joints and gasket materials shall conform to the following:

a. Coupling for Cast-Iron Pipe: for hub and spigot type ASTM A 74, AWWA C606. For hubless type: CISPI 310

b. Coupling for Steel Pipe: AWWA C606.

c. Flange Gaskets: Gaskets shall be made of non-asbestos material in

accordance with ASME B16.21. Gaskets shall be flat, 1.6 mm (1/16 inch) thick, and contain Aramid fibers bonded with Styrene Butadiene Rubber (SBR) or Nitro Butadiene Rubber (NBR). Gaskets shall be the full face or self centering flat ring type. Gaskets used for hydrocarbon service shall be bonded with NBR.

d. Neoprene Gaskets for Hub and Cast-Iron Pipe and Fittings: CISPI HSN-85.

e. Brazing Material: Brazing material shall conform to AWS A5.8, BCuP-5.

f. Brazing Flux: Flux shall be in paste or liquid form appropriate for use with brazing material. Flux shall be as follows: lead-free; have a 100 percent flushable residue; contain slightly acidic reagents; contain potassium borides; and contain fluorides. Silver brazing materials shall be in accordance with AWS A5.8.

g. Solder Material: Solder metal shall conform to ASTM B 32 95-5 tin-antimony.

h. Solder Flux: Flux shall be liquid form, non-corrosive, and conform to ASTM B 813, Standard Test 1.

i. PTFE Tape: PTFE Tape, for use with Threaded Metal or Plastic Pipe, ASTM D 3308.

j. Rubber Gaskets for Cast-Iron Soil-Pipe and Fittings (hub and spigot type and hubless type): ASTM C 564.

k. Flanged fittings including flanges, bolts, nuts, bolt patterns, etc., shall be in accordance with ASME B16.5 class 150 and shall have the manufacturer's trademark affixed in accordance with MSS SP-25. Flange material shall conform to ASTM A 105/A 105M. Blind flange material shall conform to ASTM A 516/A 516M cold service and ASTM A 515/A 515M for hot service. Bolts shall be high strength or intermediate strength with material conforming to ASTM A 193/A 193M.

2.1.2 Miscellaneous Materials

Miscellaneous materials shall conform to the following:

a. Water Hammer Arrester: PDI WH 201.

b. Copper, Sheet and Strip for Building Construction: ASTM B 370.

c. Asphalt Roof Cement: ASTM D 2822.

d. Hose Clamps: SAE J 1508.

e. Supports for Off-The-Floor Plumbing Fixtures: ASME A112.6.1M.

f. Metallic Cleanouts: ASME A112.36.2M.

g. Plumbing Fixture Setting Compound: A preformed flexible ring seal molded from hydrocarbon wax material. The seal material shall be nonvolatile nonasphaltic and contain germicide and provide watertight, gastight, odorproof and verminproof properties.

h. Coal-Tar Protective Coatings and Linings for Steel Water Pipelines: AWWA C203.

i. Hypochlorites: AWWA B300.

j. Liquid Chlorine: AWWA B301.

k. Gauges - Pressure and Vacuum Indicating Dial Type - Elastic Element: ASME B40.1.

l. Thermometers: ASTM E 1.

2.1.3 Pipe Insulation Material

Insulation shall be as specified in Section 15080 THERMAL INSULATION FOR MECHANICAL SYSTEMS.

2.2 PIPE HANGERS, INSERTS, AND SUPPORTS

Pipe hangers, inserts, and supports shall conform to MSS SP-58 and MSS SP-69.

2.3 VALVES

Valves shall be provided on supplies to equipment and fixtures. Valves 65 mm (2-1/2 inches) and smaller shall be bronze with threaded bodies for pipe and solder-type connections for tubing. Valves 80 mm (3 inches) and larger shall have flanged iron bodies and bronze trim. Pressure ratings shall be based upon the application. Valves shall conform to the following standards:

Description	Standard
Cast-Iron Gate Valves, Flanged and Threaded Ends	MSS SP-70
Cast-Iron Swing Check Valves, Flanged and Threaded Ends	MSS SP-71
Ball Valves with Flanged Butt-Welding Ends for General Service	MSS SP-72
Ball Valves Threaded, Socket-Welding, Solder Jointand Flared Ends	MSS SP-110
Cast-Iron Plug Valves, Flanged and Threaded Ends	MSS SP-78
Bronze Gate, Globe, Angle, and Check Valves	MSS SP-80
Steel Valves, Socket Welding and Threaded Ends	ASME B16.34
Cast-Iron Globe and Angle Valves, Flanged and Threaded Ends	MSS SP-85
Vacuum Relief Valves	ASSE ANSI/ASSE 1001
Water Pressure Reducing Valves	ASSE ANSI/ASSE 1003

Description	Standard
Water Heater Drain Valves	ASSE 1005
Trap Seal Primer Valves	ASSE 1018
Temperature and Pressure Relief Valves for Hot Water Supply Systems	ANSI Z21.22
Temperature and Pressure Relief Valves for Automatically Fired Hot Water Boilers	ASME CSD-1 Safety Code No., Part CW, Article 5

2.3.1 Hose Bibs

Hose Bibs with vacuum-breaker backflow preventer shall be brass with 20 mm (3/4 inch) male inlet threads, hexagon shoulder, and 20 mm (3/4 inch) hose connection. Hose Bib handle shall be securely attached to stem. Where indicated on drawings, provide hose bibbs integral with recessed wall hydrant boxes with bronze box construction, chrome plated finish, integral vacuum beaker, hinged locking cover and tee handle key.

2.3.2 Lawn Faucets

Lawn faucets shall be brass, with either straight or angle bodies, and shall be of the compression type. Body flange shall be provided with internal pipe thread to suit 20 mm (3/4 inch) pipe. Body shall be suitable for wrench grip. Faucet spout shall have 20 mm (3/4 inch) exposed hose threads. Faucet handle shall be securely attached to stem.

2.3.3 Relief Valves

Water heaters and hot water storage tanks shall have a combination pressure and temperature (P&T) relief valve. The pressure relief element of a P&T relief valve shall have adequate capacity to prevent excessive pressure buildup in the system when the system is operating at the maximum rate of heat input. The temperature element of a P&T relief valve shall have a relieving capacity which is at least equal to the total input of the heaters when operating at their maximum capacity. Relief valves shall be rated according to ANSI Z21.22. Relief valves for systems where the maximum rate of heat input is less than 59 kW (200,000 Btuh) shall have 20 mm (3/4 inch) minimum inlets, and 20 mm (3/4 inch) outlets. Relief valves for systems where the maximum rate of heat input is greater than 59 kW (200,000 Btuh) shall have 25 mm (1 inch) minimum inlets, and 25 mm (1 inch) outlets. The discharge pipe from the relief valve shall be the size of the valve outlet.

2.3.4 Thermostatic Mixing Valves

Mixing valves, thermostatic type, shall be line size and shall be constructed with rough or finish bodies either with or without plating. Each valve shall be constructed to control the mixing of hot and cold water and to deliver water at a desired temperature regardless of pressure or input temperature changes. The control element shall be of an approved type. The body shall be of heavy cast bronze, and interior parts shall be brass, bronze, or copper. The valve shall be equipped with necessary stops, check valves, unions, and sediment strainers on the inlets. Mixing

valves shall maintain water temperature within 2 degrees C of any setting. The mixing valve shall be suitable for use with hot water return systems. Factory assembled high-low manifold mixing systems shall be provided as indicated on the contract drawings. Pressured drop thru mixing valves and manifolded mixing systems shall be limited to 34.5 Kpa (5 psig). Thermostatic mixing valve assembly flow rates shall be as follows:

Building BN-1 and BN-2:	1.17 L/S.
Building BK-1 and BK-2:	3.66 L/S.
Building SCB-1:	3.47 L/S.

2.3.5 Pressure Reducing Valves

Automatic, hydraulically controlled, pressure reducing valve capable of automatically reducing a higher inlet water pressure to a constant lower outlet water pressure regardless of changing flow rates and/or varying inlet water pressure. The pressure reducing valve assembly size, capacity, flow characteries, pressure drop, and pressure setting as indicated on drawings. The valve assembly shall be equipped with gauges, reducers, unions, by-pass valve, isolation valves, Y-strainers, position indicators, flo-clean strainers, limit switches, and adjustable closing feature.

2.4 FIXTURES

Fixtures shall be water conservation type, in accordance with NAPHCC-01. Fixtures for use by the physically handicapped shall be in accordance with CABO A117.1. Vitreous china, nonabsorbent, hard-burned, and vitrified throughout the body shall be provided. Porcelain enameled ware shall have specially selected, clear white, acid-resisting enamel coating evenly applied on surfaces. No fixture will be accepted that shows cracks, crazes, blisters, thin spots, or other flaws. Fixtures shall be equipped with appurtenances such as traps, faucets, stop valves, and drain fittings. Each fixture and piece of equipment requiring connections to the drainage system, except grease interceptors, shall be equipped with a trap. Brass expansion or toggle bolts capped with acorn nuts shall be provided for supports, and polished chromium-plated pipe, valves, and fittings shall be provided where exposed to view. Fixtures with the supply discharge below the rim shall be equipped with backflow preventers. Internal parts of flush and/or flushometer valves, shower mixing valves, shower head face plates, pop-up stoppers of lavatory waste drains, and pop-up stoppers and overflow tees and shoes of bathtub waste drains may contain acetal resin, fluorocarbon, nylon, acrylonitrile-butadiene-styrene (ABS) or other plastic material, if the material has provided satisfactory service under actual commercial or industrial operating conditions for not less than 2 years. Plastic in contact with hot water shall be suitable for 82 degrees C (180 degrees F) water temperature. Plumbing fixtures shall be as indicated in paragraph PLUMBING FIXTURE SCHEDULE.

2.4.1 Lavatories

Enameled cast-iron lavatories shall be provided with two cast-iron or steel brackets secured to the underside of the apron and drilled for bolting to the wall in a manner similar to the hanger plate. Exposed brackets shall be porcelain enameled. Vitreous china lavatories shall be oval, countertop type for use in barracks buildings.

2.4.2 Automatic Flushing System

Flushing system shall consist of solenoid-activated flush valve with electrical-operated light beam sensor to energize solenoid. Flushing devices shall be provided as described in paragraph FIXTURES AND FIXTURE TRIMMINGS. Provide 24V/115V transformers as required.

2.5 BACKFLOW PREVENTERS

Backflow preventers shall be approved and listed by the Foundation For Cross-Connection Control & Hydraulic Research. Reduced pressure principle assemblies, double check valve assemblies, atmospheric (nonpressure) type vacuum breakers, and pressure type vacuum breakers shall be tested, approved, and listed in accordance with FCCCHR-01. Backflow preventers with intermediate atmospheric vent shall conform to ASSE ANSI/ASSE 1012. Reduced pressure principle backflow preventers shall conform to ASSE 1013. Hose connection vacuum breakers shall conform to ASSE ANSI/ASSE 1011. Pipe applied atmospheric type vacuum breakers shall conform to ASSE ANSI/ASSE 1001. Air gaps in plumbing systems shall conform to ASME A112.1.2. Provide indirect drain lines to floor sinks as required.

2.6 DRAINS

2.6.1 Floor and Shower Drains

Floor and shower drains shall consist of a galvanized body, integral seepage pan, and adjustable perforated or slotted chromium-plated bronze, nickel-bronze, or nickel-brass strainer, consisting of grate and threaded collar. Floor drains shall be cast iron except where metallic waterproofing membrane is installed. Drains shall be of double drainage pattern for embedding in the floor construction. The seepage pan shall have weep holes or channels for drainage to the drainpipe. The strainer shall be adjustable to floor thickness. A clamping device for attaching flashing or waterproofing membrane to the seepage pan without damaging the flashing or waterproofing membrane shall be provided when required. Drains shall be provided with threaded or caulked connection. In lieu of a caulked joint between the drain outlet and waste pipe, a neoprene rubber gasket conforming to ASTM C 564 may be installed, provided that the drain is specifically designed for the rubber gasket compression type joint. Floor and shower drains shall conform to ASME A112.21.1M.

2.6.1.1 Drains and Backwater Valves

Drains and backwater valves installed in connection with waterproofed floors or shower pans shall be equipped with bolted-type device to securely clamp flashing.

2.6.2 Area Drains

Area drains shall be plain pattern with polished stainless steel perforated or slotted grate and bottom outlet. The drain shall be circular or square with a 300 mm (12 inch) nominal overall width or diameter and 250 mm (10 inch) nominal overall depth. Drains shall be cast iron with manufacturer's standard coating. Grate shall be easily lifted out for cleaning. Outlet shall be suitable for inside caulked connection to drain pipe. Drains shall conform to ASME A112.21.1M.

2.6.3 Floor Sinks

Floor sinks shall be square, with 300 mm (12 inch) nominal overall width

and 250 mm (10 inch) nominal overall depth. Floor sink shall have an acid-resistant enamel interior finish with cast-iron body, aluminum sediment bucket, and perforated grate of cast iron in industrial areas and stainless steel in finished areas. The outlet pipe size shall be as indicated or of the same size as the connecting pipe.

2.7 TRAPS

Unless otherwise specified, traps shall be plastic per ASTM F 409 or copper-alloy adjustable tube type with slip joint inlet and swivel. Traps shall be without a cleanout. Tubes shall be copper alloy with walls not less than 0.813 mm (0.032 inch) thick within commercial tolerances, except on the outside of bends where the thickness may be reduced slightly in manufacture by usual commercial methods. Inlets shall have rubber washer and copper alloy nuts for slip joints above the discharge level. Swivel joints shall be below the discharge level and shall be of metal-to-metal or metal-to-plastic type as required for the application. Nuts shall have flats for wrench grip. Outlets shall have internal pipe thread, except that when required for the application, the outlets shall have sockets for solder-joint connections. The depth of the water seal shall be not less than 50 mm (2 inches). The interior diameter shall be not more than 3.2 mm (1/8 inch) over or under the nominal size, and interior surfaces shall be reasonably smooth throughout. A copper alloy "P" trap assembly consisting of an adjustable "P" trap and threaded or swivel joint trap wall nipple with cast brass wall flange shall be provided for lavatories. The assembly shall be a standard manufactured unit and may have a rubber-gasketed swivel joint.

2.8 GREASE INTERCEPTOR

Grease interceptor of the size indicated shall be of reinforced concrete, with removable three-section, 9.5 mm (3/8 inch) checker-plate cover, and shall be installed outside the building. Interceptors shall be tested and rated in accordance with PDI G-101. Concrete shall have 21 MPa minimum compressive strength at 28 days.

2.9 WATER HEATERS

Water heater types and capacities shall be as indicated. Each primary water heater shall have controls with an adjustable range that includes 32 to 49 degrees C (90 to 120 degrees F). Each gas-fired water heater and booster water heater shall have controls with an adjustable range that includes 49 to 82 degrees C (120 to 180 degrees F). Hot water systems utilizing recirculation systems shall be tied into building off-hour controls. The thermal efficiencies and standby heat losses shall conform to TABLE III for each type of water heater specified. The only exception is that storage water heaters and hot water storage tanks having more than 2000 liters storage capacity need not meet the standard loss requirement if the tank surface area is not insulated to R-12.5 and if a standing light is not used. Plastic materials polyetherimide (PEI) and polyethersulfone (PES) are forbidden to be used for vent piping of combustion gases.

2.9.1 Automatic Storage Type

Heaters shall be complete with control system, temperature gauge, and pressure gauge and shall have ASME rated combination pressure and temperature relief valve.

2.9.1.1 Gas-Fired Type

Gas-fired water heaters shall conform to ANSI Z21.10.1 when input is 22 KW (75,000 But per hour) or less or ANSI Z21.10.3 for heaters with input greater than 22 KW (75,000 But per hour). Water heaters shall be furnished with electronic ignition. See equipment schedules on contract drawings.

2.9.1.2 Electric Type

Electric type water heaters shall conform to UL 174 with dual heating elements. Each element shall be 4.5 KW. The elements shall be wired so that only one element can operate at a time. See equipment schedules on contract drawings.

2.9.2 Electric Booster Heater

Booster heaters shall be as specified in Section 11400 FOOD SERVICE EQUIPMENT.

2.10 HOT-WATER STORAGE TANKS

Hot-water storage tanks shall be constructed by one manufacturer, ASME stamped for the working pressure of 1034 kPa (150 psi), and shall have the National Board (ASME) registration. The tank shall be cement-lined or glass-lined steel type in accordance with AWWA D100. The heat loss shall conform to TABLE III as determined by the requirements of ASHRAE 90.1. Each tank shall be equipped with a thermometer, conforming to ASTM E 1, Type I, Class 3, Range C, style and form as required for the installation, and with 175 mm (7 inch) scale. Thermometer shall have a separable socket suitable for a 20 mm (3/4 inch) tapped opening. Tanks shall be equipped with a pressure gauge 155 mm (6 inch) minimum diameter face. Insulation shall be as specified in Section 15080 THERMAL INSULATION FOR MECHANICAL SYSTEMS. Storage tank capacity shall be as shown.

2.11 EXPANSION TANKS

Expansion tanks shall be welded steel, constructed, tested and stamped in accordance with ASME BPV VIII Div 1 for a working pressure of 862 kPa (125 psig) and precharged to the minimum operating pressure. Expansion tanks shall have a replaceable bladder and be the captive air type. Tanks shall accommodate expanded water of the system generated within the normal operating temperature range, limiting this pressure increase at all components in the system to the maximum allowable pressure at those components. Each tank air chamber shall be fitted with an air charging valve. Tanks shall be supported by steel legs or bases for vertical installation or steel saddles for horizontal installations. The only air in the system shall be the permanent sealed-in air cushion contained within the expansion tank.

2.12 PUMPS

2.12.1 Sump Pumps

Sump pumps shall be of capacities indicated. The pumps shall be of the automatic, electric motor-driven, submerged type, complete with necessary control equipment and with a split or solid cast-iron or steel cover plate. The pumps shall be direct-connected by an approved flexible coupling to a vertical electric motor having a continuous oiling device or packed bearings sealed against dirt and moisture. Motors shall be totally enclosed, fan-cooled of sizes as indicated and shall be equipped with an

across-the-line magnetic controller in a NEMA 250, Type 1 enclosed, across-the-line, magnetic controller. Each pump shall be fitted with a high-grade thrust bearing mounted above the floor. Each shaft shall have an alignment bearing at each end, and the suction inlet shall be between 75 and 150 mm above the sump bottom. The suction side of each pump shall have a strainer of ample capacity. A float switch assembly, with the switch completely enclosed in a NEMA 250, Type 1 enclosure, shall start and stop each motor at predetermined water levels. The discharge line from each pump shall be provided with a union or flange, a nonclog swing check valve, and a stop valve in an accessible location near the pump.

2.12.2 Circulating Pumps

Domestic hot water circulating pumps shall be electrically driven, single-stage, centrifugal, with mechanical seals, suitable for the intended service. Pump capacities, efficiencies, motor sizes, speeds, and impeller types shall be as shown. Pump and motor shall be integrally mounted on a cast-iron or steel subbase, or supported by the piping on which it is installed. The shaft shall be one-piece, heat-treated, corrosion-resisting steel with impeller and smooth-surfaced housing of bronze. Motor shall be totally enclosed, fan-cooled and shall have sufficient wattage (horsepower) for the service required. Pump shall conform to HI ANSI/HI 1.1-1.5. Each pump motor shall be equipped with an across-the-line magnetic controller in a NEMA 250, Type 1 enclosure with "START-STOP" switch in cover. Pump motors smaller than 746 W (Fractional horsepower pump motors) shall have integral thermal overload protection in accordance with Section 16415 ELECTRICAL WORK, INTERIOR. Guards shall shield exposed moving parts.

2.12.3 Flexible Connectors

Flexible connectors shall be provided at the suction and discharge of each pump that is 1 hp or larger. Connectors shall be constructed of neoprene, rubber, or braided bronze, with Class 150 standard flanges. Flexible connectors shall be line size and suitable for the pressure and temperature of the intended service.

2.13 PLATE HEAT EXCHANGER

a. Furnish and install as shown on the plans, a double wall Plate and Frame Heat Exchanger. The Plate and Frame Heat Exchanger manufacturer, shall have an extensive background in the design and fabrication of Plate and Frame Heat Exchangers. The manufacturer shall have a minimum of five (5) years experience in the fabrication of plate heat exchangers. Double Wall Heat Exchangers shall be designed, constructed, and tested in accordance with Section VIII, Division 1 of the ASME Pressure Vessel Code, and shall be code stamped.

b. Preference will be given to single pass designs with all connections on the fixed cover. The fixed and movable covers shall be of sufficient thickness, for the design pressure and code requirements and shall have no reinforcement or stiffeners. The moveable cover shall be provided with a steel roller bearing, for units greater than 1270 mm (50 inch) in height (from bottom of feet). This allows the movable cover to be moved without additional rigging or handling equipment. Carrying and guide bar, shall be designed to allow for expansion of at least 15%. The carrying and guide bar guiding system shall be precision manufactured of stainless steel, to prohibit corrosion and facilitate movement of the plates, painted or plated surfaces are not permitted. Entire frame shall be bolted together to

allow unit to be field assembled, to permit rigging into place. Welding of frame components is not permitted. Plate and carrying bar designs, shall permit the removal and access to any plate in the plate pack, without the need to remove any other plates. Provide lifting lugs, designed to allow lifting of the entire units flooded weight. All steel surface shall be thoroughly cleaned and prepared for painting per SSPC-SPIO63T, painting over mill scale is not acceptable. All steel components shall be epoxy coated.

c. Connections equal to or less than 50 mm (2 inch) shall be stainless steel NPT type. To avoid leakage on port area, studded port design shall be provided on heat exchangers with connections greater than 50 mm (2 inch). Flanged nozzle connections are not acceptable.

d. Compression bolts shall not require special tools and shall be equipped with lock washers at the movable cover, to facilitate opening and closing of the unit from the fixed cover only. Compression bolts shall be equipped with captive nuts at the fixed cover and threaded nuts at the movable cover. Welding of the nut to the closure bolt is prohibited. Bolts with rolled threads to reduce galling, and double width hex nuts, to adequately distribute the load, shall be provided. Ball bearing box washers shall be located at all critical closing bolts on units greater than 1270 mm (50 inch) in height. Bolts, shall be liberally coated with Lubriplate FGL-2 for lubrication and rust prevention, and covered with a plastic sleeving for protection from the environment and prevent bodily injury. Zinc plating is prohibited.

e. The double wall plate and frame heat exchangers shall consists of pressed type 304 stainless steel plates (or other alloys), to provide the required heat transfer area to meet the operating conditions specified. Individual plates shall be pressed from a homogeneous single metal sheet in one step. No multi-stage pressing of one sheet is allowed. Each heat transfer plate to be with herringbone corrugations, to optimize heat transfer, with nominal pressure losses. Corrugations to be designed to provide support to adjacent plates at evenly distributed support points. This allows pressurization of each circuit to a full differential of 1.5 times the design pressure, for one hour without buckling or deformation of the heat transfer plates. All plates and gaskets shall be permanently marked to identify quality and material. Each heat transfer plate shall have a built-in-self aligning system, to accurately locate the plates in the frame assembly, and prevent lateral plate movement, while maintaining maximum gasket contact under pressure. Plates shall be reinforced on the upper and lower mounting slots, to avoid bending of the hangers on the plates. The double wall plate and frame heat exchanger, shall be designed to perform to various capacities and pressure drops as shown on the schedule. Plates to be 304 stainless steel with II B finish and tapered gasket grooves. The plate pack shall be covered with an aluminum shroud in accordance with OSHA.

f. Gaskets shall have relieving grooves to prevent intermixing of fluids and cause leakage to flow to the outside of the unit. One piece molded gaskets shall be required. These gaskets shall fit around both the heat transfer area and port holes. Preference shall be given to non-glued gasketing systems. If an adhesive is necessary, it shall be compatible with the gasket material and the fluids. The adhesive shall be a 2 component, heat cured epoxy glue.

g. The double wall plate heat exchanger shall be designed to withstand

full test pressure in one circuit with zero pressure in the alternate circuit. Hydrostatic testing shall be in accordance with ASME Section VIII, Division, 1 Paragraph UG-99.

2.14 FOOD SERVICE EQUIPMENT

For Food Service Equipment Specifications, see Section 11400 FOOD SERVICE EQUIPMENT.

2.15 LEAK DETECTION SYSTEM FOR WATER

The leak detection system shall consist of a monitoring panel, cable, and water sensors. Dorlen Products "Water Alert" sensing alarm with Model RI-2 Remote indicator or approved equal. The system shall consist of the following:

a. The panel shall contain a power on-off switch, and audible alarm, an alarm silence switch, a test switch, and an indicator light for each water sensor (minimum of 6 each). The panel shall be table mounted with a 120 volt power connection.

b. The water sensors shall be mounted (where indicated) on the concrete floor in the crawlspace and wired to the panel.

c. The sensor cable size and type shall be as recommended by the system manufacturer for the proper operation of the system.

2.15.1 Operation

The leak detection panel shall monitor each individual sensor. When water is detected by a sensor, the corresponding visual indicator will light and the alarm will sound. The silencer switch shall silence the audible alarm but the visual indicator shall remain lit until the water is removed from the sensor. The test switch shall illuminate all the indicators and sound the alarm to ensure proper operation of the system.

2.15.2 Installation

The installation of the leak detection system shall be in accordance with the manufacturer's recommendation.

PART 3 EXECUTION

3.1 GENERAL INSTALLATION REQUIREMENTS

Piping located in air plenums shall conform to NFPA 90A requirements. Piping located in shafts that constitute air ducts or that enclose air ducts shall be noncombustible in accordance with NFPA 90A. The plumbing system shall be installed complete with necessary fixtures, fittings, traps, valves, and accessories. Water and drainage piping shall be extended 1.5 m outside the building, unless otherwise indicated. A full port ball valve and drain shall be installed on the water service line inside the building approximately 150 mm above the floor from point of entry. Piping shall be connected to the exterior service lines or capped or plugged if the exterior service is not in place. Sewer and water pipes shall be laid in separate trenches, except when otherwise shown. Exterior underground utilities shall be at least 300 mm below the finish grade or as indicated on the drawings. If trenches are closed or the pipes are otherwise covered before being connected to the service lines, the location

of the end of each plumbing utility shall be marked with a stake or other acceptable means. Valves shall be installed with control no lower than the valve body. Buried piping near and under buildings shall be installed per granular termite barrier manufacturer's recommendations. All exposed piping in the kitchen of Dining Facility DN-1 shall be chromium plated copper alloy or stainless steel.

3.1.1 Water Pipe, Fittings, and Connections

3.1.1.1 Utilities

The piping shall be extended to fixtures, outlets, and equipment. The hot-water and cold-water piping system shall be arranged and installed to permit draining. The supply line to each item of equipment or fixture, except faucets, flush valves, or other control valves which are supplied with integral stops, shall be equipped with a shutoff valve to enable isolation of the item for repair and maintenance without interfering with operation of other equipment or fixtures. Supply piping to fixtures, faucets, shower heads, and flushing devices shall be anchored to prevent movement.

3.1.1.2 Cutting and Repairing

The work shall be carefully laid out in advance, and unnecessary cutting of construction shall be avoided. Damage to building, piping, wiring, or equipment as a result of cutting shall be repaired by mechanics skilled in the trade involved.

3.1.1.3 Protection of Fixtures, Materials, and Equipment

Pipe openings shall be closed with caps or plugs during installation. Fixtures and equipment shall be tightly covered and protected against dirt, water, chemicals, and mechanical injury. Upon completion of the work, the fixtures, materials, and equipment shall be thoroughly cleaned, adjusted, and operated. Safety guards shall be provided for exposed rotating equipment.

3.1.1.4 Mains, Branches, and Runouts

Piping shall be installed as indicated. Pipe shall be accurately cut and worked into place without springing or forcing. Structural portions of the building shall not be weakened. Aboveground piping shall run parallel with the lines of the building, unless otherwise indicated. Branch pipes from service lines may be taken from top, bottom, or side of main, using crossover fittings required by structural or installation conditions. Supply pipes, valves, and fittings shall be kept a sufficient distance from other work and other services to permit not less than 12 mm between finished covering on the different services. Bare and insulated water lines shall not bear directly against building structural elements so as to transmit sound to the structure or to prevent flexible movement of the lines. Water pipe shall not be buried in or under floors unless specifically indicated or approved. Changes in pipe sizes shall be made with reducing fittings. Use of bushings will not be permitted except for use in situations in which standard factory fabricated components are furnished to accommodate specific excepted installation practice. Change in direction shall be made with fittings, except that bending of pipe 100 mm (4 inches) and smaller will be permitted, provided a pipe bender is used and wide sweep bends are formed. The center-line radius of bends shall be not less than six diameters of the pipe. Bent pipe showing kinks,

wrinkles, flattening, or other malformations will not be acceptable.

3.1.1.5 Pipe Drains

Pipe drains indicated shall consist of 20 mm (3/4 inch) hose bibb with renewable seat and gate or ball valve ahead of hose bibb. At other low points, 20 mm (3/4 inch) brass plugs or caps shall be provided. Disconnection of the supply piping at the fixture is an acceptable drain.

3.1.1.6 Expansion and Contraction of Piping

Allowance shall be made throughout for expansion and contraction of water pipe. Each hot-water and hot-water circulation riser shall have expansion loops or other provisions such as offsets, changes in direction, etc., where indicated and/or required. Risers shall be securely anchored as required to force expansion to loops. Branch connections from risers shall be made with ample swing or offset to avoid undue strain on fittings or short pipe lengths. Horizontal runs of pipe over 15 m in length shall be anchored to the wall or the supporting construction about midway on the run to force expansion, evenly divided, toward the ends. Sufficient flexibility shall be provided on branch runouts from mains and risers to provide for expansion and contraction of piping. Flexibility shall be provided by installing one or more turns in the line so that piping will spring enough to allow for expansion without straining.

3.1.1.7 Commercial-Type Water Hammer Arresters

Commercial-type water hammer arresters shall be provided on hot- and cold-water supplies and shall be located as generally indicated, with precise location and sizing to be in accordance with PDI WH 201. Water hammer arresters, where concealed, shall be accessible by means of access doors or removable panels. Commercial-type water hammer arresters shall conform to PDI WH 201. Vertical capped pipe columns will not be permitted.

3.1.2 Joints

Installation of pipe and fittings shall be made in accordance with the manufacturer's recommendations. Mitering of joints for elbows and notching of straight runs of pipe for tees will not be permitted. Joints shall be made up with fittings of compatible material and made for the specific purpose intended.

3.1.2.1 Threaded

Threaded joints shall have American Standard taper pipe threads conforming to ASME B1.20.1. Only male pipe threads shall be coated with graphite or with an approved graphite compound, or with an inert filler and oil, or shall have a polytetrafluoroethylene tape applied.

3.1.2.2 Union and Flanged

Unions, flanges and mechanical couplings shall not be concealed in walls, ceilings, or partitions. Unions shall be used on pipe sizes 65 mm (2-1/2 inches) and smaller; flanges shall be used on pipe sizes 80 mm (3 inches) and larger.

3.1.2.3 Cast Iron Soil, Waste and Vent Pipe

Bell and spigot compression and hubless gasketed clamp joints for soil,

waste and vent piping shall be installed per the manufacturer's recommendations.

3.1.2.4 Copper Tube and Pipe

The tube or fittings shall not be annealed when making connections. Connections shall be made with a multiflame torch.

a. Brazed. Brazed joints shall be made in conformance with AWS B2.2, MSS SP-73, and CDA-02 with flux and are acceptable for line sizes. Copper to copper joints shall include the use of copper-phosphorus or copper-phosphorus-silver brazing metal without flux. Brazing of dissimilar metals (copper to bronze or brass) shall include the use of flux with either a copper-phosphorus, copper-phosphorus-silver or a silver brazing filler metal.

b. Soldered. Soldered joints shall be made with flux and are only acceptable for lines 50 mm (2 inches) and smaller. Soldered joints shall conform to ASME B31.5 and CDA-02.

3.1.3 Dissimilar Pipe Materials

Connections between ferrous and non-ferrous copper pipe shall be made with dielectric unions or flange waterways. Connecting joints between plastic and metallic pipe shall be made with transition fitting for the specific purpose.

3.1.4 Pipe Sleeves and Flashing

Pipe sleeves shall be furnished and set in their proper and permanent location.

3.1.4.1 Sleeve Requirements

Pipes passing through concrete or masonry walls or concrete floors or roofs shall be provided with pipe sleeves fitted into place at the time of construction. Sleeves are not required for cast-iron soil pipe passing through concrete slab on grade, except where penetrating a membrane waterproof floor. A modular mechanical type sealing assembly may be installed in lieu of a waterproofing clamping flange and caulking and sealing of annular space between pipe and sleeve. The seals shall consist of interlocking synthetic rubber links shaped to continuously fill the annular space between the pipe and sleeve with corrosion-protected carbon steel bolts, nuts, and pressure plates. The links shall be loosely assembled with bolts to form a continuous rubber belt around the pipe with a pressure plate under each bolt head and each nut. After the seal assembly is properly positioned in the sleeve, tightening of the bolt shall cause the rubber sealing elements to expand and provide a watertight seal between the pipe and the sleeve. Each seal assembly shall be sized as recommended by the manufacturer to fit the pipe and sleeve involved. Sleeves shall not be installed in structural members, except where indicated or approved. Rectangular and square openings shall be as detailed. Each sleeve shall extend through its respective floor, or roof, and shall be cut flush with each surface, except for special circumstances. Pipe sleeves passing through floors in wet areas such as mechanical equipment rooms, lavatories, kitchens, and other plumbing fixture areas shall extend a minimum of 100 mm above the finished floor. Unless otherwise indicated, sleeves shall be of a size to provide a minimum of 6

mm (1/4 inch) clearance between bare pipe and inside of sleeve or between jacket over insulation and sleeves. Sleeves in bearing walls shall be steel pipe or cast-iron pipe. Sleeves for membrane waterproof floors shall be steel pipe, cast-iron pipe, or plastic pipe. Membrane clamping devices shall be provided on pipe sleeves for waterproof floors. Sleeves in nonbearing walls or ceilings may be steel pipe, cast-iron pipe, galvanized sheet metal with lock-type longitudinal seam, or moisture-resistant fiber or plastic. Plastic sleeves shall not be used in nonbearing fire walls, roofs, or floor/ceilings. Except as otherwise specified, the annular space between pipe and sleeve, or between jacket over insulation and sleeve, shall be sealed as indicated with sealants conforming to ASTM C 920 and with a primer, backstop material and surface preparation as specified in Section 07900 JOINT SEALING. Pipes passing through sleeves in concrete floors over crawl spaces shall be sealed as specified above. The annular space between pipe and sleeve or between jacket over insulation and sleeve shall not be sealed for interior walls which are not designated as fire rated. Sleeves through below-grade walls in contact with earth shall be recessed 12 mm from wall surfaces on both sides. Annular space between pipe and sleeve shall be filled with backing material and sealants in the joint between the pipe and concrete or masonry wall as specified above. Sealant selected for the earth side of the wall shall be compatible with dampproofing/waterproofing materials that are to be applied over the joint sealant.

3.1.4.2 Flashing Requirements

Pipes passing through roof or floor waterproofing membrane shall be installed through a 4.9 kg per square meter (16 ounce) copper flashing, each within an integral skirt or flange. Flashing shall be suitably formed, and the skirt or flange shall extend not less than 200 mm from the pipe and shall be set over the roof or floor membrane in a solid coating of bituminous cement. The flashing shall extend up the pipe a minimum of 250 mm. For cleanouts, the flashing shall be turned down into the hub and caulked after placing the ferrule. Pipes passing through pitched roofs shall be flashed, using lead or copper flashing, with an adjustable integral flange of adequate size to extend not less than 200 mm from the pipe in all directions and lapped into the roofing to provide a watertight seal. The annular space between the flashing and the bare pipe or between the flashing and the metal-jacket-covered insulation shall be sealed as indicated. Flashing for dry vents shall be turned down into the pipe to form a waterproof joint. Pipes, up to and including 250 mm (10 inches) in diameter, passing through roof or floor waterproofing membrane may be installed through a cast-iron sleeve with caulking recess, anchor lugs, flashing-clamp device, and pressure ring with brass bolts. Flashing shield shall be fitted into the sleeve clamping device. Pipes passing through wall waterproofing membrane shall be sleeved as described above. A waterproofing clamping flange shall be installed.

3.1.4.3 Waterproofing

Waterproofing at floor-mounted water closets shall be accomplished by forming a flashing guard from soft-tempered sheet copper. The center of the sheet shall be perforated and turned down approximately 40 mm to fit between the outside diameter of the drainpipe and the inside diameter of the cast-iron or steel pipe sleeve. The turned-down portion of the flashing guard shall be embedded in sealant to a depth of approximately 40 mm; then the sealant shall be finished off flush to floor level between the flashing guard and drainpipe. The flashing guard of sheet copper shall extend not less than 200 mm from the drainpipe and shall be lapped between

the floor membrane in a solid coating of bituminous cement. If cast-iron water closet floor flanges are used, the space between the pipe sleeve and drainpipe shall be sealed with sealant and the flashing guard shall be upturned approximately 40 mm to fit the outside diameter of the drainpipe and the inside diameter of the water closet floor flange. The upturned portion of the sheet fitted into the floor flange shall be sealed.

3.1.4.4 Optional Counterflashing

Instead of turning the flashing down into a dry vent pipe, or caulking and sealing the annular space between the pipe and flashing or metal-jacket-covered insulation and flashing, counterflashing may be accomplished by utilizing the following:

a. A standard roof coupling for threaded pipe up to 150 mm (6 inches) in diameter.

b. A tack-welded or banded-metal rain shield around the pipe.

3.1.4.5 Pipe Penetrations of Slab on Grade Floors

Where pipes, fixture drains, floor drains, cleanouts or similar items penetrate slab on grade floors, except at penetrations of floors with waterproofing membrane as specified in paragraphs Flashing Requirements and Waterproofing. Penetrations shall be sealed as indicated on the drawings.

3.1.5 Fire Seal

Where pipes pass through fire walls, fire-partitions, fire-rated pipe chase walls or floors above grade, a fire seal shall be provided as specified in Section 07840 FIRESTOPPING.

3.1.6 Supports

3.1.6.1 General

Hangers used to support piping 50 mm (2 inches) and larger shall be fabricated to permit adequate adjustment after erection while still supporting the load. Pipe guides and anchors shall be installed to keep pipes in accurate alignment, to direct the expansion movement, and to prevent buckling, swaying, and undue strain. Piping subjected to vertical movement when operating temperatures exceed ambient temperatures shall be supported by variable spring hangers and supports or by constant support hangers. In the support of multiple pipe runs on a common base member, a clip or clamp shall be used where each pipe crosses the base support member. Spacing of the base support members shall not exceed the hanger and support spacing required for an individual pipe in the multiple pipe run. Threaded sections of rods shall not be formed or bent.

3.1.6.2 Pipe Supports and Structural Bracing, Seismic Requirements

Piping and attached valves shall be supported and braced to resist seismic loads as specified Section 13080. Structural steel required for reinforcement to properly support piping, headers, and equipment, but not shown, shall be provided. Material used for supports shall be as specified in Section 05120 STRUCTURAL STEEL.

3.1.6.3 Pipe Hangers, Inserts, and Supports

Installation of pipe hangers, inserts and supports shall conform to MSS SP-58 and MSS SP-69, except as modified herein.

a. Types 5, 12, and 26 shall not be used.

b. Type 3 shall not be used on insulated pipe.

c. Type 18 inserts shall be secured to concrete forms before concrete is placed. Continuous inserts which allow more adjustment may be used if they otherwise meet the requirements for type 18 inserts.

d. Type 19 and 23 C-clamps shall be torqued per MSS SP-69 and shall have both locknuts and retaining devices furnished by the manufacturer. Field-fabricated C-clamp bodies or retaining devices are not acceptable.

e. Type 20 attachments used on angles and channels shall be furnished with an added malleable-iron heel plate or adapter.

f. Type 24 may be used only on trapeze hanger systems or on fabricated frames.

g. Type 39 saddles shall be used on insulated pipe 100 mm (4 inches) and larger when the temperature of the medium is 15 degrees C or higher. Type 39 saddles shall be welded to the pipe.

h. Type 40 shields shall:

(1) Be used on insulated pipe less than 100 mm (4 inches).

(2) Be used on insulated pipe 100 mm (4 inches) and larger when the temperature of the medium is 15 degrees C or less.

(3) Have a high density insert for pipe 50 mm (2 inches) and larger and for smaller pipe sizes when the insulation is suspected of being visibly compressed, or distorted at or near the shield/insulation interface. High density inserts shall have a density of 128 kg per cubic meter (8 pcf) or greater.

i. Horizontal pipe supports shall be spaced as specified in MSS SP-69 and a support shall be installed not over 300 mm from the pipe fitting joint at each change in direction of the piping. Pipe supports shall be spaced not over 1.5 m apart at valves. Horizontal pipe runs shall include allowances for expansion and contraction.

j. Vertical pipe shall be supported at each floor, except at slab-on-grade, at intervals of not more than 4.5 m nor more than 2 m from end of risers, and at vent terminations. Vertical pipe risers shall include allowances for expansion and contraction.

k. Type 40 shields used on insulated pipe shall have high density inserts with a density of 128 kg per cubic meter (8 pcf) or greater.

l. Type 35 guides using steel, reinforced polytetrafluoroethylene (PTFE) or graphite slides shall be provided to allow longitudinal pipe movement. Slide materials shall be suitable for the system operating temperatures, atmospheric conditions, and bearing loads

encountered. Lateral restraints shall be provided as needed. Where steel slides do not require provisions for lateral restraint the following may be used:

(1) On pipe 100 mm (4 inches) and larger when the temperature of the medium is 15 degrees C or higher, a Type 39 saddle, welded to the pipe, may freely rest on a steel plate.

(2) On pipe less than 100 mm (4 inches) a Type 40 shield, attached to the pipe or insulation, may freely rest on a steel plate.

(3) On pipe 100 mm (4 inches) and larger carrying medium less that 15 degrees C a Type 40 shield, attached to the pipe or insulation, may freely rest on a steel plate.

m. Pipe hangers on horizontal insulated pipe shall be the size of the outside diameter of the insulation. The insulation shall be continuous through the hanger on all pipe sizes and applications.

n. Where there are high system temperatures and welding to piping is not desirable, the type 35 guide shall include a pipe cradle, welded to the guide structure and strapped securely to the pipe. The pipe shall be separated from the slide material by at least 100 mm or by an amount adequate for the insulation, whichever is greater.

3.1.7 Pipe Cleanouts

Pipe cleanouts shall be the same size as the pipe except that cleanout plugs larger than 100 mm (4 inches) will not be required. A cleanout installed in connection with cast-iron soil pipe shall consist of a long-sweep 1/4 bend or one or two 1/8 bends extended to the place shown. An extra-heavy cast-brass or cast-iron ferrule with countersunk cast-brass head screw plug shall be caulked into the hub of the fitting and shall be flush with the floor. Cleanouts in connection with other pipe, where indicated, shall be T-pattern, 90-degree branch drainage fittings with cast-brass screw plugs, except plastic plugs shall be installed in plastic pipe. Plugs shall be the same size as the pipe up to and including 100 mm (4 inches). Cleanout tee branches with screw plug shall be installed at the foot of soil and waste stacks, at the foot of interior downspouts, on each connection to building storm drain where interior downspouts are indicated, and on each building drain outside the building. Cleanout tee branches may be omitted on stacks in single story buildings with slab-on-grade construction or where less than 450 mm of crawl space is provided under the floor. Cleanouts on pipe concealed in partitions shall be provided with chromium plated bronze, nickel bronze, nickel brass or stainless steel flush type access cover plates. Round access covers shall be provided and secured to plugs with securing screw. Square access covers may be provided with matching frames, anchoring lugs and cover screws. Cleanouts in finished walls shall have access covers and frames installed flush with the finished wall. Cleanouts installed in finished floors subject to foot traffic shall be provided with a chrome-plated cast brass, nickel brass, or nickel bronze cover secured to the plug or cover frame and set flush with the finished floor. Heads of fastening screws shall not project above the cover surface. Where cleanouts are provided with adjustable heads, the heads shall be cast iron.

3.2 WATER HEATERS AND HOT WATER STORAGE TANKS

3.2.1 Relief Valves

No valves shall be installed between a relief valve and its water heater or storage tank. The P&T relief valve shall be installed where the valve actuator comes in contact with the hottest water in the heater. Whenever possible, the relief valve shall be installed directly in a tapping in the tank or heater; otherwise, the P&T valve shall be installed in the hot-water outlet piping. A vacuum relief valve shall be provided on the cold water supply line to the hot-water storage tank or water heater and mounted above and within 150 mm above the top of the tank or water heater.

3.2.2 Installation of Gas- Fired Water Heater

Installation shall conform to NFPA NFPA 54/ANSI Z223.1 for gas fired. Storage water heaters that are not equipped with integral heat traps and having vertical pipe risers shall be installed with heat traps directly on both the inlet and outlet. Circulating systems need not have heat traps installed. An acceptable heat trap may be a piping arrangement such as elbows connected so that the inlet and outlet piping make vertically upward runs of not less than 600 mm just before turning downward or directly horizontal into the water heater's inlet and outlet fittings. Commercially available heat traps, specifically designed by the manufacturer for the purpose of effectively restricting the natural tendency of hot water to rise through vertical inlet and outlet piping during standby periods may also be approved.

3.2.3 Heat Traps

Piping to and from each water heater and hot water storage tank shall be routed horizontally and downward a minimum of 600 mm before turning in an upward direction.

3.2.4 Connections to Water Heaters

Connections of metallic pipe to water heaters shall be made with dielectric unions or flanges.

3.3 FIXTURES AND FIXTURE TRIMMINGS

Angle stops, straight stops, stops integral with the faucets, or concealed type of lock-shield, and loose-key pattern stops for supplies with threaded, sweat or solvent weld inlets shall be furnished and installed with fixtures. Where connections between copper tubing and faucets are made by rubber compression fittings, a beading tool shall be used to mechanically deform the tubing above the compression fitting. Exposed traps and supply pipes for fixtures and equipment shall be connected to the rough piping systems at the wall, unless otherwise specified under the item. Floor and wall escutcheons shall be as specified. Drain lines and hot water lines of fixtures for handicapped personnel shall be insulated and do not require polished chrome finish. Plumbing fixtures and accessories shall be installed within the space shown.

3.3.1 Fixture Connections

Where space limitations prohibit standard fittings in conjunction with the cast-iron floor flange, special short-radius fittings shall be provided. Connections between earthenware fixtures and flanges on soil pipe shall be made gastight and watertight with a closet-setting compound or neoprene

gasket and seal. Use of natural rubber gaskets or putty will not be permitted. Fixtures with outlet flanges shall be set the proper distance from floor or wall to make a first-class joint with the closet-setting compound or gasket and fixture used.

3.3.2 Flushometer Valves

Flushometer valves shall be secured to prevent movement by anchoring the long finished top spud connecting tube to wall adjacent to valve with approved metal bracket. Bumpers for water closet seats shall be installed on the flushometer stop.

3.3.3 Height of Fixture Rims Above Floor

Lavatories shall be mounted with rim 775 mm above finished floor or mounted in countertops as shown on the drawings. Wall-hung drinking fountains and water coolers shall be installed with rim 1020 mm above floor. Wall-hung service sinks shall be mounted with rim 700 mm above the floor. Installation of fixtures for use by the physically handicapped shall be in accordance with CABO A117.1.

3.3.4 Shower Bath Outfits

The area around the water supply piping to the mixing valves and behind the escutcheon plate shall be made watertight by caulking or gasketing.

3.3.5 Fixture Supports

Fixture supports for off-the-floor lavatories, urinals and other fixtures of similar size, design, and use, shall be of the chair-carrier type. The carrier shall provide the necessary means of mounting the fixture, with a foot or feet to anchor the assembly to the floor slab. Adjustability shall be provided to locate the fixture at the desired height and in proper relation to the wall. Support plates, in lieu of chair carrier, shall be fastened to the wall structure only where it is not possible to anchor a floor-mounted chair carrier to the floor slab.

3.3.5.1 Support for Solid Masonry Construction

Chair carrier shall be anchored to the floor slab. Where a floor-anchored chair carrier cannot be used, a suitable wall plate shall be imbedded in the masonry wall.

3.3.5.2 Support for Cellular-Masonry Wall Construction

Chair carrier shall be anchored to floor slab. Where a floor-anchored chair carrier cannot be used, a suitable wall plate shall be fastened to the cellular wall using through bolts and a back-up plate.

3.3.5.3 Support for Steel Stud Frame Partitions

Chair carrier shall be used. The anchor feet and tubular uprights shall be of the heavy duty design; and feet (bases) shall be steel and welded to a square or rectangular steel tube upright. Wall plates, in lieu of floor-anchored chair carriers, shall be used only if adjoining steel partition studs are suitably reinforced to support a wall plate bolted to these studs.

3.3.6 Backflow Prevention Devices

Plumbing fixtures, equipment, and pipe connections shall not cross connect or interconnect between a potable water supply and any source of nonpotable water. Backflow preventers shall be installed where indicated and in accordance with NAPHCC-01 at all other locations necessary to preclude a cross-connect or interconnect between a potable water supply and any nonpotable substance. In addition backflow preventers shall be installed at all locations where the potable water outlet is below the flood level of the equipment, or where the potable water outlet will be located below the level of the nonpotable substance. Backflow preventers shall be located so that no part of the device will be submerged. Backflow preventers shall be of sufficient size to allow unrestricted flow of water to the equipment, and preclude the backflow of any nonpotable substance into the potable water system. Access shall be provided for maintenance and testing. Each device shall be a standard commercial unit.

3.3.7 Access Panels

Access panels shall be provided for concealed valves and controls, or any item requiring inspection or maintenance. Access panels shall be of sufficient size and located so that the concealed items may be serviced, maintained, or replaced. Access panels shall be as specified in Section 05500 MISCELLANEOUS METAL.

3.3.8 Sight Drains

Sight drains shall be installed so that the indirect waste will terminate 50 mm above the flood rim of the funnel to provide an acceptable air gap.

3.3.9 Traps

Each trap shall be placed as near the fixture as possible, and no fixture shall be double-trapped. Traps installed on cast-iron soil pipe shall be cast iron. Traps installed on steel pipe or copper tubing shall be recess-drainage pattern, or brass-tube type. Traps installed on plastic pipe may be plastic conforming to ASTM D 3311. Traps for acid-resisting waste shall be of the same material as the pipe.

3.4 VIBRATION-ABSORBING FEATURES

Mechanical equipment, including compressors and pumps, shall be isolated from the building structure by approved vibration-absorbing features, unless otherwise shown. Each foundation shall include an adequate number of standard isolation units. Each unit shall consist of machine and floor or foundation fastening, together with intermediate isolation material, and shall be a standard product with printed load rating. Piping connected to mechanical equipment shall be provided with flexible connectors.

3.5 IDENTIFICATION SYSTEMS

3.5.1 Identification Tags

Identification tags made of brass, engraved laminated plastic, or engraved anodized aluminum, indicating service and valve number shall be installed on valves, except those valves installed on supplies at plumbing fixtures. Tags shall be 35 mm (1-3/8 inch) minimum diameter, and marking shall be stamped or engraved. Indentations shall be black, for reading clarity. Tags shall be attached to valves with No. 12 AWG, copper wire, chrome-plated beaded chain, or plastic straps designed for that purpose.

3.5.2 Color Coding

Color coding for piping identification shall be as specified in Section 09900 PAINTING, GENERAL.

3.6 ESCUTCHEONS

Escutcheons shall be provided at finished surfaces where bare or insulated piping, exposed to view, passes through floors, walls, or ceilings, except in boiler, utility, or equipment rooms. Escutcheons shall be fastened securely to pipe or pipe covering and shall be satin-finish, corrosion-resisting steel, polished chromium-plated zinc alloy, or polished chromium-plated copper alloy. Escutcheons shall be either one-piece or split-pattern, held in place by internal spring tension or setscrew.

3.7 PAINTING

Painting of pipes, hangers, supports, and other iron work, either in concealed spaces or exposed spaces, is specified in Section 09900 PAINTING, GENERAL.

3.8 TESTS, FLUSHING AND DISINFECTION

3.8.1 Plumbing System

The following tests shall be performed on the plumbing system in accordance with NAPHCC-01.

a. Drainage and Vent Systems Tests: 3 meter (10 feet) head 15 minutes

b. Building Sewers Tests: 3 meter (10 feet) head, 15 minutes

c. Water Supply Systems Tests: 689 kpa (100 psig), 1 hour Hydrostatically test piping system at not less than 690 kpa (gage) or 150% of working pressure.

3.8.1.1 Test of Backflow Prevention Assemblies

Backflow prevention assembly shall be tested using gauges specifically designed for the testing of backflow prevention assemblies. Gauges shall be tested annually for accuracy in accordance with the University of Southern California's Foundation of Cross Connection Control and Hydraulic Research or the American Water Works Association Manual of Cross Connection (Manual M-14). Report form for each assembly shall include, as a minimum, the following:

Data on Device	Data on Testing Firm
Type of Assembly	Name
Manufacturer	Address
Model Number	Certified Tester
Serial Number	Certified Tester No.
Size	Date of Test
Location	
Test Pressure Readings	Serial Number and Test Data of Gauges

If the unit fails to meet specified requirements, the unit shall be repaired and retested.

3.8.2 Defective Work

If inspection or test shows defects, such defective work or material shall be replaced or repaired as necessary and inspection and tests shall be repeated. Repairs to piping shall be made with new materials. Caulking of screwed joints or holes will not be acceptable.

3.8.3 System Flushing

Before tests, potable water piping shall be flushed. In general, sufficient water shall be used to produce a minimum water velocity of 0.762 meters per second (2.5 feet per second) through piping being flushed. Flushing shall be continued until entrained dirt and other foreign materials have been removed and until discharge water shows no discoloration. System shall be drained at low points. Strainer screens shall be removed, cleaned, and replaced in line. After flushing and cleaning, systems shall be prepared for service by immediately filling water piping with clean, fresh potable water. Any stoppage, discoloration, or other damage to the finish, furnishings, or parts of the building due to the Contractor's failure to properly clean the piping system shall be repaired by the Contractor. When the system flushing is complete, the hot-water system shall be adjusted for uniform circulation. Flushing devices and automatic control systems shall be adjusted for proper operation.

3.8.4 Operational Test

Upon completion of and prior to acceptance of the installation, the Contractor shall subject the plumbing system to operating tests to demonstrate satisfactory functional and operational efficiency. Such operating tests shall cover a period of not less than 8 hours for each system and shall include the following information in a report with conclusion as to the adequacy of the system:

a. Time, date, and duration of test.

b. Water pressures at the most remote and the highest fixtures.

c. Operation of each fixture and fixture trim.

d. Operation of each valve, hydrant, and faucet.

e. Pump suction and discharge pressures.

f. Temperature of each domestic hot-water supply.

g. Operation of each floor and roof drain by flooding with water.

h. Operation of each vacuum breaker and backflow preventer.

i. Complete operation of each water pressure booster system, including pump start pressure and stop pressure.

3.8.5 Disinfection

After operational tests are complete, the entire domestic hot- and cold-water distribution system shall be disinfected. System shall be flushed as specified, before introducing chlorinating material. The

chlorinating material shall be hypochlorites or liquid chlorine. Water chlorination procedure shall be in accordance with AWWA M20. The chlorinating material shall be fed into the water piping system at a constant rate at a concentration of at least 50 parts per million (ppm). A properly adjusted hypochlorite solution injected into the main with a hypochlorinator, or liquid chlorine injected into the main through a solution-feed chlorinator and booster pump, shall be used. The chlorine residual shall be checked at intervals to ensure that the proper level is maintained. Chlorine application shall continue until the entire main is filled. The water shall remain in the system for a minimum of 24 hours. Each valve in the system being disinfected shall be opened and closed several times during the contact period to ensure its proper disinfection. Following the 24-hour period, no less than 25 ppm chlorine residual shall remain in the system. Water tanks shall be disinfected by the addition of chlorine directly to the filling water. Following a 6 hour period, no less than 50 ppm chlorine residual shall remain in the tank. The system including the tanks shall then be flushed with clean water until the residual chlorine is reduced to less than one part per million. During the flushing period each valve and faucet shall be opened and closed several times. The Contractor shall be responsible for the sampling and testing of water in potable water systems and shall be responsible for all associated costs. From several points in the system the Contractor shall take samples of water in proper disinfection containers in the presence of the Contracting Officer for bacterial examination. The samples of water shall be tested for total coliform organisms (coliform bacteria, fecal coliform, streptococcal, and other bacteria) in accordance with AWWA-01. The testing method used shall be either the multiple-tube fermentation technique or the membrane-filter technique. The sterilizing shall be repeated until tests indicate the absence of coliform organisms (zero mean coliform density per 100 milliliters) in the samples for at least 2 full days. The system will not be accepted until satisfactory bacteriological results have been obtained.

3.9 PLUMBING FIXTURE SCHEDULE

3.9.1 Company Operations Facilities (COF-2)

P-1 WATER CLOSET:

Siphon-jet, elongated bowl, top supply spud, ASME A112.19.2M, floor mounted. Floor flange shall be copper alloy, cast iron, or plastic.

Gasket shall be wax type.

Seat - IAPMO ANSI/IAPMO Z124.5, Type A, white plastic, elongated, open front.

Flushometer Valve - ASSE ANSI/ASSE 1037, large diaphragm type with non-hold-open feature, backcheck angle control stop, and vacuum breaker. Minimum upper chamber inside diameter of not less than 66.7 mm (2-5/8 inches) at the point where the diaphragm is sealed between the upper and lower chambers. The maximum water use shall be 6 liters per flush. Flushometer shall be automatic flushing type. Flushometer shall be equipped with solenoid operator, light beam sensor and manual override button. Flushometer system shall be furnished with electrical boxes, mounting plates, and low-voltage transformers as required.

P-2 URINAL:

Wall hanging, with integral trap and extended shields, ASME A112.19.2M washout. Top supply connection, back outlet.

Flushometer Valve - Similar to Flushometer Valve for P-1. The maximum water use shall be 3.8 liters per flush. Flushometer shall be automatic flushing type.

P-3 LAVATORY:

Manufacturer's standard sink depth, vitreous china ASME A112.19.2M under-counter mounting. Nominal size 483 mm (19 inches) wide x 432 mm (17 inches) front to back.

Faucet - Faucets shall be single control, mixing type. Faucets shall have metal replaceable cartridge control unit or metal cartridge units with diaphragm which can be replaced without special tools. Valves and handles shall be copper alloy. Connection between valve and spout for center-set faucet shall be of rigid metal tubing. The flow shall be limited to 0.16 liters per second at a flowing pressure of 549 kPa.

Handles - Lever type. Cast, formed, or drop forged copper alloy.

Drain - Strainer shall be copper alloy or stainless steel.

P-4 LAVATORY:

Manufacturer's standard sink depth, vitreous china, straight back. Nominal size 508 mm (20 inches) wide x 457 mm (18 inches) front to back. Furnish with concealed arm carriers.

Faucet - Faucets shall be single control, mixing type. Faucets shall have replaceable seats and washers. Faucets shall have metal replaceable cartridge control unit or metal cartridge units with diaphragm which can be replaced without special tools. Valves and handles shall be copper alloy. Connection between valve and spout for center-set faucet shall be of rigid metal tubing. The flow shall be limited to 0.16 liters per second at a flowing pressure of 549 kPa

Handles - Lever type. Cast, formed, or drop forged copper alloy.

Drain - Strainer shall be copper alloy or stainless steel.

P-5 SERVICE SINK:

Enameled cast iron ASME A112.19.1M, copper alloy or stainless steel ASME A112.19.3M trap standard 609.6 mm wide x 508.0 mm deep (24 inches wide x 20 inches deep), splashback 228.6 mm (9 inches) high wall mounted 609.6 mm wide x 508.0 mm deep (24 inches wide x 20 inches deep), splashback 228.6 mm (9 inches) high.

Faucet and Spout - Cast or wrought copper alloy, with top or bottom brace, with backflow preventer. Faucets shall have replaceable seat and the washer shall rotate onto the seat. Handles shall be lever type. Strainers shall have internal threads.

Drain Assembly - Plug, cup strainer, crossbars, jam nuts, washers, couplings, stopper, etc., shall be copper alloy or stainless steel.

Trap - Cast iron, minimum 7.5 cm diameter.

P-5: Shower heads, CID A-A-240 other than emergency showers, shall include a non- removable tamperproof device to limit water flow to 0.16 liters per second (2.5 gpm) when tested in accordance with ASME A112.18.1M.

Wall Mounted: Shower head shall be nonadjustable spray, stainless steel or chromium plated brass with ball joint. Handles shall be chrome-plated die cast zinc alloy. Control valves shall be copper alloy and have metal integral parts of copper alloy, nickel alloy, or stainless steel. Valves shall be thermostatic mixing type. Shower head shall be vandalproof with integral back. Mixing value shall be memory positioning type which allows user to turn valve on and off at preferred temperature without readjusting handle position each time.

P-7 WATER COOLER DRINKING FOUNTAINS:

Water cooler drinking fountains shall: be self contained, conform to ARI 1010, use one of the fluorocarbon gases conforming to ARI 700 and ASHRAE 34 which has an Ozone Depletion Potential of less than or equal to 0.05, have a capacity to deliver 30.2 liters per hour (8 gph) of water at 10 degrees C (50 degrees F) with an inlet water temperature of 27 degrees C (80 degrees F) while residing in a room environment of 32 degrees C (90 degrees F), and have self-closing valves. Self-closing valves shall have automatic stream regulators, have a flow control capability, have a push button actuation or have a cross-shaped index metal turn handle without a hood. Exposed surfaces of stainless steel shall have No. 4 general polish finish. Spouts shall provide a flow of water at least 100 mm (4 inches) high so as to allow the insertion of a cup or glass under the flow of water.

Surface Wall-Mounted - Surface wall-mounted units shall have nominal dimensions of 336.6 mm (13-1/4 inches) wide, 330.2 mm (13 inches) deep, and have a back height of 152.4 to 203.2 mm (6 to 8 inches). The bowl shall be made of corrosion resisting steel. The unit shall have concealed fasteners and be for interior installation.

3.9.2 Company Operations Facilities (COF-3 to COF-7)

P-1 WATER CLOSET:

Siphon-jet, elongated bowl, top supply spud, ASME A112.19.2M, floor mounted. Floor flange shall be copper alloy, cast iron, or plastic.

Gasket shall be wax type.

Seat - IAPMO ANSI/IAPMO Z124.5, Type A, white plastic, elongated, open front.

Flushometer Valve - ASSE ANSI/ASSE 1037, large diaphragm type with non-hold-open feature, backcheck angle control stop, and vacuum breaker. Minimum upper chamber inside diameter of not less than 66.7 mm (2-5/8 inches) at the point where the diaphragm is sealed between the upper and lower chambers. The maximum water use shall be 6 liters per flush. Flushometer shall be automatic flushing type. Flushometer shall be equipped with solenoid operator, light beam sensor and manual override button. Flushometer system shall be furnished with electrical boxes, mounting plates, and low-voltage transformers as required.

P-2 URINAL:

Wall hanging, with integral trap and extended shields, ASME A112.19.2M washout. Top supply connection, back outlet.

Flushometer Valve - Similar to Flushometer Valve for P-1. The maximum water use shall be 3.8 liters per flush. Flushometer shall be automatic flushing type.

P-3 LAVATORY:

Manufacturer's standard sink depth, vitreous china ASME A112.19.2M under-counter mounting. Nominal size 483 mm (19 inches) wide x 432 mm (17 inches) front to back.

Faucet - Faucets shall be single control, mixing type. Faucets shall have metal replaceable cartridge control unit or metal cartridge units with diaphragm which can be replaced without special tools. Valves and handles shall be copper alloy. Connection between valve and spout for center-set faucet shall be of rigid metal tubing. The flow shall be limited to 0.16 liters per second at a flowing pressure of 549 kPa.

Handles - Lever type. Cast, formed, or drop forged copper alloy.

Drain - Strainer shall be copper alloy or stainless steel.

P-4 LAVATORY:

Manufacturer's standard sink depth, vitreous china, straight back. Nominal size 508 mm (20 inches) wide x 457 mm (18 inches) front to back. Furnish with concealed arm carriers.

Faucet - Faucets shall be single control, mixing type. Faucets shall have replaceable seats and washers. Faucets shall have metal replaceable cartridge control unit or metal cartridge units with diaphragm which can be replaced without special tools. Valves and handles shall be copper alloy. Connection between valve and spout for center-set faucet shall be of rigid metal tubing. The flow shall be limited to 0.16 liters per second at a flowing pressure of 549 kPa

Handles - Lever type. Cast, formed, or drop forged copper alloy.

Drain - Strainer shall be copper alloy or stainless steel.

P-5 SERVICE SINK:

Enameled cast iron ASME A112.19.1M, copper alloy or stainless steel ASME A112.19.3M trap standard 609.6 mm wide x 508.0 mm deep (24 inches wide x 20 inches deep), splashback 228.6 mm (9 inches) high wall mounted 609.6 mm wide x 508.0 mm deep (24 inches wide x 20 inches deep), splashback 228.6 mm (9 inches) high.

Faucet and Spout - Cast or wrought copper alloy, with top or bottom brace, with backflow preventer. Faucets shall have replaceable seat and the washer shall rotate onto the seat. Handles shall be lever type. Strainers shall have internal threads.

Drain Assembly - Plug, cup strainer, crossbars, jam nuts, washers, couplings, stopper, etc., shall be copper alloy or stainless steel.

Trap - Cast iron, minimum 7.5 cm diameter.

P-6 MAINTENANCE SINK

Enameled cast iron ASME A112.19.1M, copper alloy or stainless steel ASME A112.19.3M trap standard 609.6 mm wide x 508.0 mm deep (24 inches wide x 20 inches deep), splashback 228.6 mm (9 inches) high wall mounted 609.6 mm wide x 508.0 mm deep (24 inches wide x 20 inches deep), splashback 228.6 mm (9 inches) high.

Faucet and Spout - Cast or wrought copper alloy, with top or bottom brace, with backflow preventer. Faucets shall have replaceable seat and the washer shall rotate onto the seat. Handles shall be lever type. Strainers shall have internal threads.

Drain Assembly - Plug, cup strainer, crossbars, jam nuts, washers, couplings, stopper, etc., shall be copper alloy or stainless steel.

Trap - Cast iron, minimum 7.5 cm diameter.

P-7 Shower: Shower heads, CID A-A-240 other than emergency showers, shall include a non-removable, tamperproof device to limit water flow to 0.16 liters per second (2.5 gpm) when tested in accordance with ASME A112.18.1M.

Wall Mounted: Shower head shall be nonadjustable spray, stainless steel or chromium plated brass with ball joint. Handles shall be chrome-plated die cast zinc alloy. Control valves shall be copper alloy and have metal integral parts of copper alloy, nickel alloy, or stainless steel. Valves shall be thermostatic mixing type. Shower head shall be vandalproof with integral back. Mixing value shall be memory positioning type which allows user to turn valve on and off at preferred temperature without readjusting handle position each time.

P-9 WATER COOLER DRINKING FOUNTAINS:

Water cooler drinking fountains shall: be self contained, conform to ARI 1010, use one of the fluorocarbon gases conforming to ARI 700 and ASHRAE 34 which has an Ozone Depletion Potential of less than or equal to 0.05, have a capacity to deliver 30.2 liters per hour (8 gph) of water at 10 degrees C (50 degrees F) with an inlet water temperature of 27 degrees C (80 degrees F) while residing in a room environment of 32 degrees C (90 degrees F), and have self-closing valves. Self-closing valves shall have automatic stream regulators, have a flow control capability, have a push button actuation or have a cross-shaped index metal turn handle without a hood. Exposed surfaces of stainless steel shall have No. 4 general polish finish. Spouts shall provide a flow of water at least 100 mm (4 inches) high so as to allow the insertion of a cup or glass under the flow of water.

Surface Wall-Mounted - Surface wall-mounted units shall have nominal dimensions of 336.6 mm (13-1/4 inches) wide, 330.2 mm (13 inches) deep, and have a back height of 152.4 to 203.2 mm (6 to 8 inches). The bowl shall be made of corrosion resisting steel. The unit shall have concealed fasteners and be for interior installation.

3.9.3 PLUMBING FIXTURE SCHEDULE FOR SOLDIER COMMUNITY BUILDING

P-1 WATER CLOSET ACCESSIBLE:

Siphon-jet, elongated bowl, top supply spud, ASME A112.19.2M, floor

mounted. Floor flange shall be copper alloy, cast iron, or plastic. Height of top rim of bowl shall be in accordance with CABO A-1171.1.

Gasket shall be wax type.

Seat - IAPMO ANSI/IAPMO Z124.5, Type A, white plastic, elongated, open front.

Flushometer Valve - ASSE ANSI/ASSE 1037, electronically controlled, large diaphragm type with non-hold-open feature, backcheck angle control stop, and vacuum breaker. Minimum upper chamber inside diameter of not less than 66.7 mm (2-5/8 inches) at the point where the diaphragm is sealed between the upper and lower chambers. The maximum water use shall be 6 liters per flush. Provide 24V/115V transformer as required.

P-2 WHEELCHAIR LAVATORY:

Vitreous china, ASME A112.19.2M, wheelchair lavatory with wrist or elbow controls 527 mm wide x 457 mm deep (21 inches wide x 18 inches deep) with gooseneck spout. The flow shall be limited to 0.16 liters per second at a flowing water pressure of 549 kPa.

Drain - Strainer shall be copper alloy or stainless steel.

P-3 KITCHEN SINK:

Ledge back with holes for faucet and spout single bowl 609.6 x 533.4 mm x 255 mm deep (24 x 21 inches x 10 inches) deep stainless steel ASME A112.19.3M.

Faucet and Spout - Cast or wrought copper alloy. Aerator shall have internal threads. The flow shall be limited to 0.16 liters per second at a flowing water pressure of 549 kPa.

Handle - Cast copper alloy, wrought copper alloy, or stainless steel. Single lever type.

Drain Assembly - Compatible with disposer installation.

P-4 SERVICE SINK:

Enameled cast iron ASME A112.19.1M, corner, floor mounted 711.2 mm (28 inches) square, 171.5 mm (6-3/4 inches) deep.

Faucet and Spout - Cast or wrought copper alloy, with top or bottom brace, with backflow preventer. Faucets shall have replaceable seat and the washer shall rotate onto the seat. Handles shall be lever type. Strainers shall have internal threads.

Drain Assembly - Plug, cup strainer, crossbars, jam nuts, washers, couplings, stopper, etc., shall be copper alloy or stainless steel.

Trap - Cast iron, minimum 7.5 cm diameter.

P-5 LAUNDRY TRAY

Counter top 600 wide x 533.4 mm front to back (24 x 21 inch, sink 340 mm (13-1/2 inches) deep, 18 gauge, type 302 stainless steel.

Faucet and Spout - Cast or wrought copper alloy, without top or bottom brace, with backflow preventer. Faucets shall have replaceable seat and the washer shall rotate onto the seat. Strainers shall have internal threads. Combination faucets with two valves and spouts shall be provided.

Handles - Cast or wrought copper alloy. Lever type.

P-6 WATER COOLER DRINKING FOUNTAINS (DUAL HEIGHT LEVELS)

Water cooler drinking fountains shall: be self contained, conform to ARI 1010, use one of the fluorocarbon gases conforming to ARI 700 and ASHRAE 34 which has an Ozone Depletion Potential of less than or equal to 0.05, have a capacity to deliver 30.2 liters per hour (8 gph) of water at 10 degrees C (50 degrees F) with an inlet water temperature of 27 degrees C (80 degrees F) while residing in a room environment of 32 degrees C (90 degrees F), and have self-closing valves. Self-closing valves shall have automatic stream regulators, have a flow control capability, have a push button actuation or have a cross-shaped index metal turn handle without a hood. Exposed surfaces of stainless steel shall have No. 4 general polish finish. Spouts shall provide a flow of water at least 100 mm (4 inches) high so as to allow the insertion of a cup or glass under the flow of water.

Surface Wall-Mounted - Surface wall-mounted units shall have nominal dimensions of 336.6 mm (13-1/4 inches) wide, 330.2 mm (13 inches) deep, and have a back height of 152.4 to 203.2 mm (6 to 8 inches). The bowl shall be made of corrosion resisting steel. The unit shall have concealed fasteners and be for interior installation.

Handicapped - Handicapped units shall be surface wall-mounted. The dimensions shall be 381.0 mm (15 inches) wide, 508.0 mm (20 inches) deep, with a back height of 152.4 to 203.2 mm (6 to 8 inches). The unit shall clear the floor or ground by at least 200 mm (8 inches). A clear knee space shall exist between the bottom of the bowl and the floor or ground of at least 685 mm (27 inches) and between the front edge of the bowl and the body of the unit of at least 200 mm (8 inches). A 200 mm (8 inch) wide clear space shall exist on both sides of the unit. The spout height shall be no more than 1 m (36 inches) above the floor or ground to the outlet. The spout shall be at the front of the unit and direct the water flow in a trajectory that is parallel or nearly parallel to the front of the unit. The bowl shall be 165.1 mm (6-1/2 inches) high, made of corrosion resisting steel and be for interior installation.

P-7 FOOD WASTE DISPOSER:

Food waste disposers shall be in accordance with UL 430.

P-8 DISHWASHING MACHINES

Household dishwashing machines shall conform to UL 749 and ASSE ANSI/ASSE 1006, 600 mm x 650 mm x 850 mm high (24 x 24-3/4 x 34 inch high)

3.9.4 PLUMBING FIXTURE SCHEDULE FOR REMOTE SWITCHING CENTER BUILDING

P-1 Emergency Showers

Head for Emergency and Emergency Eye and Face Wash. Shower control shall be 25 mm (1 inch) or 40 mm (1-1/2 inch) stay-open type control valve. Unit shall be corrosion-resisting steel and shall be pedestal mounted.

3.9.5 PLUMBING FIXTURE SCHEDULE FOR TRAINING FACILITY

P-1 WATER CLOSET:

Siphon-jet, elongated bowl, top supply spud, ASME A112.19.2M, Wall mounted.

Seat - IAPMO ANSI/IAPMO Z124.5, Type A, white plastic, elongated, open front.

Flushometer Valve - ASSE ANSI/ASSE 1037, large diaphragm type with non-hold-open feature, backcheck angle control stop, and vacuum breaker. Minimum upper chamber inside diameter of not less than 66.7 mm (2-5/8 inches) at the point where the diaphragm is sealed between the upper and lower chambers. The maximum water use shall be 6 liters per flush.

P-2 WATER CLOSET HANDICAPPED:

Height of top rim of bowl shall be in accordance with CABO A117.1; other features are the same as P-2.

P-3 URINAL:

Wall hanging, with integral trap and extended shields, ASME A112.19.2M siphon jet. Top supply connection, back outlet.

Flushometer Valve - Similar to Flushometer Valve for P-2. The maximum water use shall be 3.8 liters per flush.

P-4 LAVATORY:

Manufacturer's standard sink depth, vitreous china ASME A112.19.2M, ledge back. Nominal size 508 mm (20 inches) wide x 457 mm (18 inches) front to back.

Faucet - Faucets shall be single type. Faucets shall have replaceable seats and washers. Valves and handles shall be copper alloy.

Handles - Four arm type. Cast, formed, or drop forged copper alloy.

Drain - Strainer shall be copper alloy or stainless steel.

P-5 SERVICE SINK:

Enameled cast iron ASME A112.19.1M, copper alloy or stainless steel ASME A112.19.3M trap standard 609.6 mm wide x 508.0 mm deep (24 inches wide x 20 inches deep), splashback 228.6 mm (9 inches) high, splashback 228.6 mm (9 inches) high.

Faucet and Spout - Cast or wrought copper alloy, without top or bottom brace, with backflow preventer. Faucets shall have replaceable seat and the washer shall rotate onto the seat. Handles shall be four arm type. Strainers shall have internal threads.

Drain Assembly - Plug, cup strainer, crossbars, jam nuts, washers, couplings, stopper, etc., shall be copper alloy or stainless steel.

Trap - Cast iron, minimum 7.5 cm diameter.

P-6 WATER COOLER DRINKING FOUNTAINS:

Water cooler drinking fountains shall: be self contained, conform to ARI 1010, use one of the fluorocarbon gases conforming to ARI 700 and ASHRAE 34 which has an Ozone Depletion Potential of less than or equal to 0.05, have a capacity to deliver 30.2 liters per hour (8 gph) of water at 10 degrees C (50 degrees F) with an inlet water temperature of 27 degrees C (80 degrees F) while residing in a room environment of 32 degrees C (90 degrees F), and have self-closing valves. Self-closing valves shall have automatic stream regulators, have a flow control capability, have a push button actuation or have a cross-shaped index metal turn handle without a hood. Exposed surfaces of stainless steel shall have No. 4 general polish finish. Spouts shall provide a flow of water at least 100 mm (4 inches) high so as to allow the insertion of a cup or glass under the flow of water.

Interior Free Standing - Free standing units shall have nominal dimensions of 1016 to 1054.1 mm (40 to 41-1/2 inches) high, 304.8 to 457.2 mm (12 to 18 inches) wide, and 304.8 to 355.6 mm (12 to 14 inches) deep. The bowl shall be made of corrosion resisting steel and be for interior installation.

3.9.6 PLUMBING FIXTURE SCHEDULE FOR BARRACKS BUILDING ("BK-1" and "BK-2")

P-1 WATER CLOSET:

Siphon-jet, elongated bowl, top supply spud, ASME A112.19.2M, floor mounted. Floor flange shall be copper alloy, cast iron, or plastic.

Gasket shall be wax type.

Seat - IAPMO ANSI/IAPMO Z124.5, Type A, white plastic, elongated, open front.

Flush Tank - An adequate quantity of water shall be provided to flush and clean the fixture served. The water supply to flush tanks equipped for manual flushing shall be controlled by a float valve or other automatic device designed to refill the tank after each discharge, and to completely shut off the water flow to the tank when the tank is filled to operational capacity. Water closets having their flush valve seat located below the flood level rim of the closet bowl shall have a ballcock installed within a sheath or in a separate and isolated compartment of the tank, both to have visible discharge onto the floor in case of failure. Provision shall be made to automatically supply water to the fixture so as to refill the trap seal after each flushing. The water supply to flush tanks equipped for automatic flushing shall be controlled by a suitable timing device. Ballcocks shall meet ASSE 1002.

P-2 LAVATORY:

Manufacturer's standard sink depth, 483 mm (19 inches) wide x 381 mm (15 inches) front to back enameled cast iron, self rimming type, ASME A112.19.1M countertop, oval.

Faucet - Faucets shall be single control, mixing type. Faucets shall have metal replaceable cartridge control unit or metal cartridge units with diaphragm which can be replaced without special tools. Valves and handles shall be copper alloy. Connection between valve and spout for center-set faucet shall be of rigid metal tubing. The flow shall be limited to 0.16 liters per second at a flowing pressure of 549 kPa.

Handles - Lever type. Cast, formed, or drop forged copper alloy.

Drain - Pop-up drain shall include stopper, lift rods, jam nut, washer, and tail piece.

P-3 BATHTUB:

Straight front, recessed, 1.524 m x 812.8 mm x 406.4 mm (60 x 32 x 16 in), enameled cast iron, ASME A112.19.1M raised bottom or porcelain enameled formed steel with structural composite reinforcement ASME A112.19.4M. Structural reinforcement shall be in accordance with IAPMO ANSI/IAPMO Z124.1 including appendix.

Drain Assembly - Plug, cup strainer, overflow assembly, washers, couplings, pop-up lever or trip lever, stopper, fittings, etc., shall be brass, cast copper alloy, or wrought copper alloy. See paragraph FIXTURES for optional plastic accessories.

P-3 Shower: Shower heads, CID A-A-240 other than emergency showers, shall include a non-removable, tamperproof device to limit water flow to 0.16 liters per second (2.5 gpm) when tested in accordance with ASME A112.18.1M.

Bath Showers: Bath showers shall include bathtub spout, shower head, valves, diverters. A shower head mounting with ball joint shall be provided. Diverter shall be integral with single mixing valves or mounted hot and cold water valves. Tub spout shall be copper alloy. Control valves shall be copper alloy and have metal integral parts of copper alloy, nickel alloy, or stainless steel. Valves shall be pressure balanced type.

P-4 KITCHEN SINK:

Ledge back with holes for faucet and spout single bowl 609.6 wide x 533.4 mm front to back (24 x 21 inches) .188 mm (7-1/2 inch) deep, stainless steel ASME A112.19.3M.

Faucet and Swing Spout - Cast or wrought copper alloy. Aerator shall have internal threads. The flow shall be limited to 0.16 liters per second at a flowing water pressure of 549 kPa.

Handle - Cast copper alloy, wrought copper alloy, or stainless steel. Lever type.

Drain Assembly - Plug, cup strainer, crossbars, jam nuts, washers, couplings, stopper, etc., shall be copper alloy or stainless steel.

P-5 SERVICE SINK:

Enameled cast iron ASME A112.19.1M, copper alloy or stainless steel ASME A112.19.3M trap standard 609.6 mm wide x 508.0 mm deep (24 inches wide x 20 inches deep), splashback 228.6 mm (9 inches) high.

Faucet and Spout - Cast or wrought copper alloy, with top or bottom brace, with backflow preventer. Faucets shall have replaceable seat and the washer shall rotate onto the seat. Handles shall be lever type. Strainers shall have internal threads.

Drain Assembly - Plug, cup strainer, crossbars, jam nuts, washers, couplings, stopper, etc., shall be copper alloy or stainless steel.

Trap - Cast iron, minimum 7.5 cm diameter.

3.9.7 PLUMBING FIXTURE SCHEDULE FOR BATTALION HEADQUARTERS BUILDING ("BN-1" and "BN-2")

P-1 WATER CLOSET:

Siphon-jet, elongated bowl, top supply spud, ASME A112.19.2M, floor mounted. Floor flange shall be copper alloy, cast iron, or plastic.

Gasket shall be wax type.

Seat - IAPMO ANSI/IAPMO Z124.5, Type A, white plastic, elongated, open front.

Flushometer Valve - ASSE ANSI/ASSE 1037, electronically controlled, large diaphragm type with non-hold-open feature, backcheck angle control stop, and vacuum breaker. Minimum upper chamber inside diameter of not less than 66.7 mm (2-5/8 inches) at the point where the diaphragm is sealed between the upper and lower chambers. The maximum water use shall be 6 liters per flush. Provide 24v/115v transformer as required.

P-1A WATER CLOSET HANDICAPPED:

Height of top rim of bowl shall be in accordance with CABO A117.1; other features are the same as P-1.

P-2 LAVATORY:

Manufacturer's standard sink depth, wall hung, 527 mm wide x 457 mm front to back, vitreous china, ASME A112.19.1M straight back. Finish with concealed arm carriers.

Faucet - Faucets shall be single control, mixing type. Faucets shall have metal replaceable cartridge control unit or metal cartridge units with diaphragm which can be replaced without special tools. Valves and handles shall be copper alloy. Connection between valve and spout for center-set faucet shall be of rigid metal tubing. The flow shall be limited to 0.16 liters per second at a flowing pressure of 549 kPa.

Handles - Lever type. Cast, formed, or drop forged copper alloy.

Drain - Strainer shall be copper alloy or stainless steel.

P-2A WHEELCHAIR LAVATORY:

Vitreous china, ASME A112.19.2M, wheelchair lavatory with wrist or elbow controls 508.0 mm wide x 457 mm deep (20 inches wide x 18 inches deep) with gooseneck spout. The flow shall be limited to 0.16 liters per second at a flowing water pressure of 549 kPa.

P-3 URINAL:

Wall hanging, with integral trap and extended shields, ASME A112.19.2M washout. Top supply connection, back outlet.

Flushometer Valve - Similar to Flushometer Valve for P-1. The maximum water use shall be 3.8 liters per flush.

P-3A URINAL HANDICAPPED:

Height of top rim of bowl shall be in accordance with CABO A117.1; other features same as P-3.

Drain - Strainer shall be copper alloy or stainless steel.

P-4 WHEELCHAIR SINK:

Ledge back with holes for faucet and spout single bowl 609.6 wide x 533.4 mm front to back (24 x 21 inches).138 mm (5-1/2 inch) deep stainless steel ASME A112.19.3M.

Faucet and Gooseneck Spout - Cast or wrought copper alloy. Aerator shall have internal threads. The flow shall be limited to 0.16 liters per second at a flowing water pressure of 549 kPa.

Handle - Cast copper alloy, wrought copper alloy, or stainless steel. Lever type.

Drain Assembly - Plug, cup strainer, crossbars, jam nuts, washers, couplings, stopper, etc., shall be copper alloy or stainless steel.

P-5 Shower: Shower head shall be hand held personal type with 1.5m flexible metal hose, 750 mm slide bar for hand shower head mounting, in line vacuum breaker, and wall connection with wall flange. The shower valve shall be copper alloy and have metal integral parts of copper alloy, nickel alloy, or stainless steel. The valve shall be pressure balanced mixing type with volume control, integral stops, adjustable limit stop screw to prohibit valve handle from being turned to excessive hot discharge temperatures, single blade level handle. The shower shall include a non-removable, tamper-proof device to limit water flow to .16 liters per second (2.5 gpm). The shower assembly shall be provided with chrome plated finish.

P-6 SERVICE SINK:

Enameled cast iron ASME A112.19.1M, corner, floor mounted 711.2 mm (28 inches) square, 171.5 mm (6-3/4 inches) deep.

Faucet and Spout - Cast or wrought copper alloy, with top or bottom brace, with backflow preventer. Faucets shall have replaceable seat and the washer shall rotate onto the seat. Handles shall be lever type. Strainers shall have internal threads.

Drain Assembly - Plug, cup strainer, crossbars, jam nuts, washers, couplings, stopper, etc., shall be copper alloy or stainless steel.

Trap - Cast iron, minimum 7.5 cm diameter.

P-7 WATER COOLER DRINKING FOUNTAINS (DUAL HEIGHT LEVELS)

Water cooler drinking fountains shall: be self contained, conform to ARI 1010, use one of the fluorocarbon gases conforming to ARI 700 and ASHRAE 34 which has an Ozone Depletion Potential of less than or equal to 0.05, have a capacity to deliver 30.2 liters per hour (8 gph) of water at 10 degrees C (50 degrees F) with an inlet water temperature of 27 degrees C (80 degrees F) while residing in a room environment of 32 degrees C (90 degrees F), and have self-closing valves. Self-closing valves shall have automatic stream regulators, have a flow control capability, have a push button actuation or have a cross-shaped index metal turn handle without a hood. Exposed surfaces of stainless steel shall have No. 4 general polish finish. Spouts shall provide a flow of water at least 100 mm (4 inches) high so as to allow the insertion of a cup or glass under the flow of water.

Surface Wall-Mounted - Surface wall-mounted units shall be 336.6 mm (13-1/4 inches) wide, 330.2 mm (13 inches) deep, and have a back height of 152.4 to 203.2 mm (6 to 8 inches). The bowl shall be made of stainless steel. The unit shall have concealed fasteners and be for interior installation.

Handicapped - Handicapped units shall be surface wall-mounted. The dimensions shall have nominal dimensions of 381.0 mm (15 inches) wide, 508.0 mm (20 inches) deep, with a back height of 152.4 to 203.2 mm (6 to 8 inches). The unit shall clear the floor or ground by at least 200 mm (8 inches). A clear knee space shall exist between the bottom of the bowl and the floor or ground of at least 685 mm (27 inches) and between the front edge of the bowl and the body of the unit of at least 200 mm (8 inches). A 200 mm (8 inch) wide clear space shall exist on both sides of the unit. The spout height shall be no more than 1 m (36 inches) above the floor or ground to the outlet. The spout shall be at the front of the unit and direct the water flow in a trajectory that is parallel or nearly parallel to the front of the unit. The bowl shall be 165.1 mm (6-1/2 inches) high, made of stainless steel and be for interior installation.

3.9.8 Plumbing Fixture Schedule for Dining Facility (DN-1)

P-1 WATER CLOSET:

Siphon-jet, elongated bowl, top supply spud, ASME A112.19.2M, wall mounted. Flush volume shall be no more than 6 liters of water per flush.

Gasket shall be wax type.

Seat - CID A-A-238, Type A, white plastic, elongated, open front.

Flushometer Valve - ASSE 1037, large diaphragm type with non-hold-open feature, backcheck angle control stop, and vacuum breaker. Minimum upper chamber inside diameter of not less than 66.7 mm (2-5/8 inches) at the point where the diaphragm is sealed between the upper and lower chambers. The maximum water use shall be 6 liters per flush.

P-2 WATER CLOSET HANDICAPPED:

Top rim of bowl shall be 457 mm (18 inches) above the floor; other features are the same as P-1.

P-3 URINAL:

Wall hanging, with integral trap and extended shields, ASME A112.19.2M

washout. Top supply connection, back outlet.

Flushometer Valve - Similar to Flushometer Valve for P-1. The maximum water use shall be 3.8 liters per flush.

P-4 LAVATORY, COUNTERTOP TYPE, PATRON TOILETS:

Manufacturer's standard sink depth, corian, see toilet countertop drawings.

Faucet - Faucets shall be single type. Faucets shall have metal replaceable cartridge control unit or metal cartridge units with diaphragm which can be replaced without special tools. Valves and handles shall be copper alloy. The flow shall be limited to 0.16 liters per second at a flowing pressure of 549 kPa.

Handles - Lever type. Cast, formed, or drop forged copper alloy.

Drain - Strainer shall be copper alloy or stainless steel.

P-5 LAVATORY, COUNTERTOP TYPE, EMPLOYEE TOILETS

Manufacturer's standard sink depth, corian, see toilet countertop drawings.

Faucet - Faucets shall be center set, single control, mixing type. Faucets shall have metal replaceable cartridge control unit or metal cartridge units with diaphragm which can be replaced without special tools. Valves and handles shall be copper alloy. The flow shall be limited to 0.16 liters per second at a flowing pressure of 549 kPa.

Handles - Lever type. Cast, formed, or drop forged copper alloy.

Drain - Strainer shall be copper alloy or stainless steel.

P-6 LAVATORY; COUNTERTOP TYPE, HANDICAPPED; PATRON TOILETS

Same as P-4 above, except finished with 100 mm long blade type, wrist control handles and gooseneck spout.

P-7 LAVATORY, COUNTERTOP TYPE, HANDICAPPED; EMPLOYEE TOILETS

Same as P-5 above, except faucet shall be centerset, mixing type and furnished with 100 mm long blade type, wrist control handles and gooseneck spout.

P-8 SERVICE SINK:

Stainless steel ASME A112.19.3M floor mounted 838.2 mm (33 inches) wide, 254 mm (10 inches) deep.

Faucet and Spout - Cast or wrought copper alloy, with top or bottom brace, with backflow preventer. Faucets shall have replaceable seat and the washer shall rotate onto the seat. Handles shall be lever type. Strainers shall have internal threads.

Drain Assembly - Plug, cup strainer, crossbars, jam nuts, washers, couplings, stopper, etc. shall be copper alloy or stainless steel.

Trap - Cast iron.

P-9 HAND SINK:

Manufacturer's standard sink depth, stainless steel, splash back, with wrist control handles and goose neck spout. Flow shall be limited to 0.16 liters per second. Nominal overall size: 432 mm wide x 381 mm front to back (17 by 15 inches).

Drain - Strainer shall be stainless steel

P-10 WATER COOLER DRINKING FOUNTAINS: Water cooler drinking fountains shall: be self contained, conform to ARI 1010, use one of the fluorocarbon gases conforming to ARI 700 and ASHRAE 34 which has an Ozone Depletion Potential of less than or equal to 0.05, have a capacity to deliver 30.2 liters per hour (8 gph) of water at 10 degrees C (50 degrees F) with an inlet water temperature of 27 degrees C (80 degrees F) while residing in a room environment of 32 degrees C (90 degrees F), and have self-closing valves. Self-closing valves shall have automatic stream regulators, have a flow control capability, have a push button actuation or have a cross-shaped index metal turn handle without a hood. Exposed surfaces of stainless steel shall have No. 4 general polish finish. Spouts shall provide a flow of water at least 100 mm (4 inches) high so as to allow the insertion of a cup or glass under the flow of water.

Handicapped - Handicapped units shall be surface wall-mounted. The dimensions shall have nominal dimensions of 381.0 mm (15 inches) wide, 508.0 mm (20 inches) deep, with a back height of 152.4 to 203.2 mm (6 to 8 inches). A clear knee space shall exist between the bottom of the bowl and the floor or ground of at least 685 mm (27 inches) and between the front edge of the bowl and the body of the unit of at least 200 mm (8 inches). A 200 mm (8 inch) wide clear space shall exist on both sides of the unit. The spout height shall be no more than 1 m (36 inches) above the floor or ground to the outlet. The spout shall be at the front of the unit and direct the water flow in a trajectory that is parallel or nearly parallel to the front of the unit. The bowl shall be 165.1 mm (6-1/2 inches) high, made of corrosion resisting steel and be for interior installation.

P-11 WASHDOWN STATION

Cast or wrought copper alloy faucet and spout. Furnish with backflow preventer. Faucets shall have replaceable sent. Furnish with 15.2 meter long, high pressure, high temperature hose and nozzle.

3.9.9 Plumbing Fixture Schedule For Central Plant Building

P-1 Emergency Showers

Emergency and Emergency Eye and Face Wash. Shower control shall be 25 mm or 40 mm stay-open type control valve and thermal purge valve. Unit shall be corrosion-resisting steel and shall be pedestal mounted.

3.10 POSTED INSTRUCTIONS

Framed instructions under glass or in laminated plastic, including wiring and control diagrams showing the complete layout of the entire system, shall be posted where directed. Condensed operating instructions explaining preventive maintenance procedures, methods of checking the system for normal safe operation, and procedures for safely starting and stopping the system shall be prepared in typed form, framed as specified

above for the wiring and control diagrams and posted beside the diagrams. The framed instructions shall be posted before acceptance testing of the systems.

3.11 PERFORMANCE OF WATER HEATING EQUIPMENT

Standard rating condition terms are as follows:

EF = Energy factor, overall efficiency.

ET = Thermal efficiency with 21 degrees C delta T.

EC = Combustion efficiency, 100 percent - flue loss when smoke = o (trace is permitted).

SL = Standby loss in W/0.093 sq. m. based on 27 degrees C delta T, or in percent per hour based on nominal 38 degrees C delta T.

HL = Heat loss of tank surface area.

V = Storage volume in liters

3.11.1 Storage Water Heaters

3.11.1.1 Electric

a. Storage capacity of 454 liters or less, and input rating of 12 kW or less: minimum energy factor (EF) shall be 0.95-0.00132V per 10 CFR 430.

b. Storage capacity of more than 454 liters or input rating more than 12 kW: maximum SL shall be 1.9 w/0.093 sq. m. per ASHRAE 90.1, Addenda B.

3.11.1.2 Gas

a. Storage capacity of 379 liters or less, and input rating of 21980 W or less: minimum EF shall be 0.62-0.0019V per 10 CFR 430.

b. Storage capacity of more than 379 liters - or input rating more than 21980 W: Et shall be 77 percent; maximum SL shall be 1.3+38/V, per ANSI Z21.10.3.

3.11.2 Unfired Hot Water Storage

Volumes and inputs: maximum HL shall be 20.5 W/sq. meter.

3.12 FOOD SERVICE EQUPMENT FOR DINING FACILITY DN-1

For the Dining Facility, the contractor shall be required to coordinate the plumbing requirements for food service equipment listed in Section 11400 FOOD SERVICE EQUPIMENT with the equipment suppliers. All required plumbing connections for food service equipment shall be clearly indicated in the Plumbing System detailed drawing required under paragraph 1.5, "Submittals, SD-04 Drawings".

3.13 TABLES

TABLE I
PIPE AND FITTING MATERIALS FOR
DRAINAGE, WASTE, AND VENT PIPING SYSTEMS

		SERVICE					
Item #	Pipe and Fitting Materials	A	B	C	D	E	F
1	Cast iron soil pipe and fittings, hub and spigot, ASTM A 74 with compression gaskets	X	X	X	X	X	
2	Cast iron soil pipe and fittings hubless, CISPI 301 and ASTM A 888		X		X		
3	Cast iron drainage fittings, threaded, ASME B16.12 for use with Item 6				X		
4	Cast iron screwed fittings (threaded) ASME B16.4 for use with Item 6				X	X	
5	Malleable-iron threaded fittings, galvanized ASME B16.3 for use with Item 6				X	X	
6	Steel pipe, seamless galvanized, ASTM A 53, Type S, Grade B				X	X	
7	Stainless steel pipe, and threaded fittings, Grade TP304 Schedule 105 conforming to ASME B36.19M.						X

SERVICE:

A - Underground Building Soil, Waste and Storm Drain
B - Aboveground Soil, Waste, Drain In Buildings
C - Underground Vent
D - Aboveground Vent
E - Interior Rainwater Conductors Aboveground
F - Food Service Equipment Drains
* - Hard Temper

TABLE II
PIPE AND FITTING MATERIALS FOR PRESSURE PIPING SYSTEMS

		SERVICE			
Item No.	Pipe and Fitting Materials	A	B	C	D
1	Seamless copper water tube, ASTM B 88, ASTM B 88M	X**	X**	X**	X***
2	Seamless and welded copper distribution tube (Type D) ASTM B 641	X**	X**	X**	X****
3	Cast copper alloy solder-joint pressure fittings, ASME B16.18 for use with Items 1 and 2	X	X	X	X
4	Fittings: brass or bronze; ASME B16.15, and ASME B16.18 ASTM B 828	X	X		
5	Carbon steel pipe unions, socket-welding and threaded, MSS SP-83	X	X	X	
6	Malleable-iron threaded pipe unions ASME B16.39	X	X		
7	Nipples, pipe threaded ASTM A 733	X	X	X	

A - Cold Water Aboveground
B - Hot Water 82 degree C Maximum Aboveground
C - Compressed Air Lubricated
D - Cold Water Service Belowground
Indicated types are minimum wall thicknesses.
** - Type L - Hard
*** - Type K - Hard temper with brazed joints only or type K-soft temper without joints in or under floors
**** - In or under slab floors only brazed joints

TABLE III
STANDARD RATING CONDITIONS AND MINIMUM PERFORMANCE RATINGS FOR WATER HEATING EQUIPMENT

A. STORAGE WATER HEATERS

FUEL	STORAGE CAPACITY LITERS	INPUT RATING	TEST PROCEDURE	REQUIRED PERFORMANCE
Elect.	454 max.	12 KO max.	10 CFR 430	EF = 0.95-0.00132V minimum
Elect.	454 min. OR	12 kW min.	ASHRAE 90.1 (Addenda B)	SL = 1.9 W/0.09 sq. m. maximum
Gas	380 max.	22 kW max.	10 CFR 430	EF = 0.62-0.0019V minimum
Gas	380 min. OR	22 kW min.	ANSI Z21.10.3	ET= 77 percent; SL = 1.3+38/V max.

B. Unfired Hot Water Storage.

Volumes and inputs: maximum HL shall be 20.5 W/sq. meter

TERMS:

EF = Energy factor, overall efficiency.
ET = Thermal efficiency with 21 degrees C delta T.
EC = Combustion efficiency, 100 percent - flue loss when smoke = 0 (trace is permitted).
SL = Standby loss in W/0.09 sq. m. based on 27 degrees C delta T, or in percent per hour based on nominal 32 degrees C delta T.
HL = Heat loss of tank surface area
V = Storage volume in gallons

-- End of Section --

SECTION TABLE OF CONTENTS

DIVISION 15 - MECHANICAL

SECTION 15895

AIR SUPPLY, DISTRIBUTION, VENTILATION, AND EXHAUST SYSTEM

PART 1 GENERAL

1.1 REFERENCES
1.2 COORDINATION OF TRADES
1.3 DELIVERY AND STORAGE
1.4 SUBMITTALS

PART 2 PRODUCTS

2.1 STANDARD PRODUCTS
2.2 ASBESTOS PROHIBITION
2.3 NAMEPLATES
2.4 EQUIPMENT GUARDS AND ACCESS
2.5 PIPING COMPONENTS
2.5.1 Steel Pipe
2.5.2 Joints and Fittings For Steel Pipe
2.5.2.1 Welded Joints and Fittings
2.5.2.2 Flanged Joints and Fittings
2.5.2.3 Threaded Joints and Fittings
2.5.2.4 Dielectric Unions and Flanges
2.5.3 Copper Tube
2.5.4 Joints and Fittings For Copper Tube
2.5.5 Valves
2.5.5.1 Gate Valves
2.5.5.2 Globe Valves
2.5.5.3 Check Valves
2.5.5.4 Angle Valves
2.5.5.5 Ball Valves
2.5.5.6 Butterfly Valves
2.5.5.7 Balancing Valves
2.5.5.8 Air Vents
2.5.6 Strainers
2.5.7 Backflow Preventers
2.5.8 Flexible Pipe Connectors
2.5.9 Pressure Gauges
2.5.10 Thermometers
2.5.11 Escutcheons
2.5.12 Pipe Hangers, Inserts, and Supports
2.5.13 Expansion Joints
2.5.13.1 Slip Joints
2.5.13.2 Flexible Ball Joints
2.5.13.3 Bellows Type Joints
2.5.14 Insulation
2.5.15 Condensate Drain Lines
2.6 ELECTRICAL WORK
2.7 CONTROLS
2.8 DUCTWORK COMPONENTS

2.8.1 Metal Ductwork
2.8.1.1 Transitions
2.8.1.2 Metallic Flexible Duct
2.8.1.3 Insulated Nonmetallic Flexible Duct Runouts
2.8.1.4 General Service Duct Connectors
2.8.1.5 High Temperature Service Duct Connections
2.8.2 Ductwork Accessories
2.8.2.1 Duct Access Doors
2.8.2.2 Fire Dampers
2.8.2.3 Splitters and Manual Balancing Dampers
2.8.2.4 Air Deflectors and Branch Connections
2.8.3 Duct Sleeves, Framed Prepared Openings, Closure Collars
2.8.3.1 Duct Sleeves
2.8.3.2 Framed Prepared Openings
2.8.3.3 Closure Collars
2.8.4 Diffusers, Registers, and Grilles
2.8.4.1 Diffusers
2.8.4.2 Registers and Grilles
2.8.5 Louvers
2.8.6 Air Vents, Penthouses, and Goosenecks
2.8.7 Bird Screens and Frames
2.9 AIR SYSTEMS EQUIPMENT
2.9.1 Fans
2.9.1.1 Centrifugal Fans
2.9.1.2 In-Line Centrifugal Fans
2.9.1.3 Panel Type Power Wall Ventilators
2.9.1.4 Centrifugal Type Power Wall Ventilators
2.9.1.5 Centrifugal Type Power Roof Ventilators
2.9.1.6 Air-Curtain Fans
2.9.1.7 Ceiling Exhaust Fans
2.9.2 Coils
2.9.2.1 Direct-Expansion Coils
2.9.2.2 Water Coils
2.9.3 Air Filters
2.9.3.1 Extended Surface Pleated Panel Filters
2.9.3.2 Range and Griddle Hood Service
2.9.3.3 Holding Frames
2.9.3.4 Filter Gauges
2.10 AIR HANDLING UNITS
2.10.1 Factory-Fabricated Air Handling Units
2.10.1.1 Casings
2.10.1.2 Cooling Coils
2.10.1.3 Air Filters
2.10.1.4 Fans
2.10.1.5 Access Sections and Filter/Mixing Boxes
2.10.1.6 Dampers
2.10.2 Variable Frequency Controller
2.10.2.1 Description
2.10.2.2 Governing Requirements
2.10.2.3 Quality Assurance
2.10.2.4 Service
2.10.2.5 Basic Features
2.10.2.6 Protective Circuit and Features
2.10.2.7 Adjustments
2.11 TERMINAL UNITS
2.11.1 Room Fan-Coil Units
2.11.1.1 Enclosures
2.11.1.2 Fans
2.11.1.3 Coils

2.11.1.4 Drain Pans
2.11.1.5 Manually Operated Outside Air Dampers
2.11.1.6 Filters
2.11.1.7 Motors
2.11.2 Variable Air Volume (VAV) Terminal Units
2.11.2.1 Variable Volume, Single Duct
2.12 FACTORY PAINTING
2.13 REFRIGERANT LEAK DETECTOR
2.13.1 Refrigerant Monitor Performance
2.13.1.1 Refrigerant Monitor
2.13.1.2 Monitors
2.13.1.3 Refrigerant Monitor

PART 3 EXECUTION

3.1 INSTALLATION
3.1.1 Piping
3.1.1.1 Joints
3.1.1.2 Flanges and Unions
3.1.2 Supports
3.1.2.1 General
3.1.2.2 Seismic Requirements (Pipe Supports and Structural Bracing)
3.1.2.3 Pipe Hangers, Inserts and Supports
3.1.3 Anchors
3.1.4 Pipe Sleeves
3.1.4.1 Roof and Floor Sleeves
3.1.4.2 Fire Seal
3.1.4.3 Escutcheons
3.1.5 Condensate Drain Lines
3.1.6 Pipe-Alignment Guides
3.1.7 Air Vents and Drains
3.1.7.1 Vents
3.1.7.2 Drains
3.1.8 Valves
3.1.9 Equipment and Installation
3.1.10 Access Panels
3.1.11 Flexible Connectors
3.1.12 Sleeved and Framed Openings
3.1.13 Metal Ductwork
3.1.14 Kitchen Exhaust Ductwork
3.1.14.1 Ducts Conveying Smoke and Grease Laden Vapors
3.1.14.2 Exposed Ductwork
3.1.14.3 Concealed Ducts Conveying Moisture Laden Air
3.1.14.4 Kitchen Hood
3.1.15 Dust Control
3.1.16 Insulation
3.1.17 Duct Test Holes
3.1.18 Power Roof Ventilator Mounting
3.1.19 Power Transmission Components Adjustment
3.2 FIELD PAINTING AND PIPING IDENTIFICATION
3.3 PIPING HYDROSTATIC TEST
3.4 DUCTWORK LEAK TEST
3.5 CLEANING AND ADJUSTING
3.6 TESTING, ADJUSTING, AND BALANCING
3.7 PERFORMANCE TESTS
3.8 FIELD TRAINING

-- End of Section Table of Contents --

SECTION 15895

AIR SUPPLY, DISTRIBUTION, VENTILATION, AND EXHAUST SYSTEM

PART 1 GENERAL

1.1 REFERENCES

The publications listed below form a part of this specification to the extent referenced. The publications are referred to in the text by basic designation only.

AIR CONDITIONING AND REFRIGERATION INSTITUTE (ARI)

ARI 350	(1986) Sound Rating of Non-Ducted Indoor Air-Conditioning Equipment
ARI ANSI/ARI 410	(1991) Forced-Circulation Air-Cooling and Air-Heating Coils
ARI ANSI/ARI 430	(1989) Central-Station Air-Handling Units
ARI ANSI/ARI 440	(1993) Room Fan-Coil and Unit Ventilator
ARI 880	(1994) Air Terminals
ARI Guideline D	(1987) Application and Installation of Central Station Air-Handling Units

AIR MOVEMENT AND CONTROL ASSOCIATION (AMCA)

AMCA ANSI/AMCA 210	(1985) Laboratory Methods of Testing Fans for Rating
AMCA 300	(1996) Reverberant Room Method for Sound Testing of Fans

AMERICAN BEARING MANUFACTURERS ASSOCIATION (ABEMA)

ABEMA Std 9	(1990) Load Ratings and Fatigue Life for Ball Bearings
ABEMA Std 11	(1990) Load Ratings and Fatigue Life for Roller Bearings

AMERICAN SOCIETY FOR TESTING AND MATERIALS (ASTM)

ASTM A 53	(1997) Pipe, Steel, Black and Hot-Dipped, Zinc-Coated, Welded and Seamless
ASTM A 123	(1989a) Zinc (Hot-Dip Galvanized) Coatings on Iron and Steel Products
ASTM A 167	(1996) Stainless and Heat-Resisting Chromium-Nickel Steel Plate, Sheet, and

	Strip
ASTM A 181/A 181M	(1995b) Carbon Steel, Forgings for General-Purpose Piping
ASTM A 193/A 193M	(1997a) Alloy-Steel and Stainless Steel Bolting Materials for High-Temperature Service
ASTM A 234/A 234M	(1997) Piping Fittings of Wrought Carbon Steel and Alloy Steel for Moderate and High Temperature Service
ASTM A 733	(1993) Welded and Seamless Carbon Steel and Austenitic Stainless Steel Pipe Nipples
ASTM A 924/A 924M	(1996a) General Requirements for Steel Sheet, Metallic-Coated by the Hot-Dip Process
ASTM B 62	(1993) Composition Bronze or Ounce Metal Castings
ASTM B 75	(1995a) Seamless Copper Tube
ASTM B 88	(1996) Seamless Copper Water Tube
ASTM B 88M	(1996) Seamless Copper Water Tube (Metric)
ASTM B 117	(1997) Operating Salt Spray (FOG) Apparatus
ASTM B 650	(1995) Electrodeposited Engineering Chromium Coatings on Ferrous Substrates
ASTM B 813	(1993) Liquid and Paste Fluxes for Soldering Applications for Copper and Copper Alloy Tube
ASTM C 1071	(1991) Thermal and Acoustical Insulation (Glass Fiber, Duct Lining Material)
ASTM D 520	(1984; R 1995) Zinc Dust Pigment
ASTM D 1654	(1992) Evaluation of Painted or Coated Specimens Subjected to Corrosive Environments
ASTM D 3359	(1995a) Measuring Adhesion by Tape Test
ASTM E 437	(1992) Industrial Wire Cloth and Screens (Square Opening Series)
ASTM F 1199	(1988; R 1993) Cast (All Temperature and Pressures) and Welded Pipe Line Strainers (150 psig and 150 degrees F Maximum)

AMERICAN SOCIETY OF HEATING, REFRIGERATING AND AIR-CONDITIONING ENGINEERS (ASHRAE)

ASHRAE 52.1	(1992) Gravimetric and Dust-Spot Procedures for Testing Air-Cleaning Devices Used in General Ventilation for Removing Particulate Matter
ASHRAE ANSI/ASHRAE 68	(1986) Laboratory Method of Testing In-Duct Sound Power Measurement Procedures for Fans
ASHRAE 70	(1991) Method of Testing for Rating the Performance of Air Outlets and Inlets

AMERICAN SOCIETY OF MECHANICAL ENGINEERS (ASME)

ASME B1.20.1	(1983; R 1992) Pipe Threads, General Purpose (Inch)
ASME B16.3	(1992) Malleable Iron Threaded Fittings
ASME B16.5	(1996) Pipe Flanges and Flanged Fittings NPS 1/2 thru NPS 24
ASME B16.9	(1993) Factory-Made Wrought Steel Buttwelding Fittings
ASME B16.11	(1996) Forged Fittings, Socket-Welding and Threaded
ASME B16.18	(1984; R 1994) Cast Copper Alloy Solder Joint Pressure Fittings
ASME B16.21	(1992) Nonmetallic Flat Gaskets for Pipe Flanges
ASME B16.22	(1995) Wrought Copper and Copper Alloy Solder Joint Pressure Fittings
ASME B16.26	(1988) Cast Copper Alloy Fittings for Flared Copper Tubes
ASME B16.39	(1986; R 1994) Malleable Iron Threaded Pipe Unions Classes 150, 250, and 300
ASME B31.1	(1995; B31.1a; B31.1b; B31.1c) Power Piping
ASME B40.1	(1991) Gauges - Pressure Indicating Dial Type - Elastic Element
ASME BPV IX	(1998) Boiler and Pressure Vessel Code; Section IX, Welding and Brazing Qualifications

AMERICAN WELDING SOCIETY (AWS)

AWS D1.1	(1996) Structural Welding Code - Steel

COMMERCIAL ITEM DESCRIPTIONS (CID)

CID A-A-1419	(Rev D) Filter Element, Air Conditioning

(Viscous-Impingement and Dry Types, Replaceable)

EXPANSION JOINT MANUFACTURERS ASSOCIATION (EJMA)

EJMA-01 (1993) EJMA Standards

MANUFACTURERS STANDARDIZATION SOCIETY OF THE VALVE AND FITTINGS INDUSTRY (MSS)

MSS SP-25 (1998) Standard Marking System for Valves, Fittings, Flanges and Unions

MSS SP-58 (1993) Pipe Hangers and Supports - Materials, Design and Manufacture

MSS SP-69 (1996) Pipe Hangers and Supports - Selection and Application

MSS SP-70 (1990) Cast Iron Gate Valves, Flanged and Threaded Ends

MSS SP-71 (1997) Cast Iron Swing Check Valves, Flanges and Threaded Ends

MSS SP-72 (1992) Ball Valves with Flanged or Butt-Welding Ends for General Service

MSS SP-80 (1997) Bronze Gate, Globe, Angle and Check Valves

MSS SP-85 (1994) Cast Iron Globe & Angle Valves, Flanged and Threaded Ends

MSS SP-110 (1996) Ball Valves Threaded, Socket-Welding, Solder Joint, Grooved and Flared Ends

NATIONAL ELECTRICAL MANUFACTURERS ASSOCIATION (NEMA)

NEMA MG 1 (1993; Rev 1; Rev 2; Rev 3) Motors and Generators

NATIONAL FIRE PROTECTION ASSOCIATION (NFPA)

NFPA 70 (1996; Errata 96-4) National Electrical Code

NFPA 90A (1996) Installation of Air Conditioning and Ventilating Systems

NFPA 96 (1994) Ventilation Control and Fire Protection of Commercial Cooking Equipment

SHEET METAL AND AIR CONDITIONING CONTRACTORS' NATIONAL ASSOCIATION (SMACNA)

SMACNA-05 (1992) Fire, Smoke and Radiation Damper Installation Guide for HVAC Systems

SMACNA-06	(1995) HVAC Duct Construction Standards - Metal and Flexible
SMACNA-10	(1985) HVAC Air Duct Leakage Test Manual

UNDERWRITERS LABORATORIES (UL)

UL 94	(1996; Rev thru Jul 1997) Tests for Flammability of Plastic Materials for Parts in Devices and Appliances
UL 181	(1996; Rev Oct 1996) Factory-Made Air Ducts and Air Connectors
UL 214	(1997) Tests for Flame-Propagation of Fabrics and Films
UL 555	(1995) Fire Dampers
UL 586	(1996) High-Efficiency, Particulate, Air Filter Units
UL 705	(1994; Rev thru Mar 1996) Power Ventilators
UL 900	(1994; Rev thru Apr 1997) Test Performance of Air Filter Units
UL 1995	(1995; Rev thru Feb 97) Heating and Cooling Equipment
UL Bld Mat Dir	(1997) Building Materials Directory
UL Elec Const Dir	(1998) Electrical Construction Equipment Directory
UL Fire Resist Dir	(1998) Fire Resistance Directory (2 Vol.)

1.2 COORDINATION OF TRADES

Ductwork, piping offsets, fittings, and accessories shall be furnished as required to provide a complete installation and to eliminate interference with other construction.

1.3 DELIVERY AND STORAGE

Equipment delivered and placed in storage shall be stored with protection from the weather, humidity and temperature variations, dirt and dust, or other contaminants.

1.4 SUBMITTALS

Government approval is required for submittals with a "GA" designation; submittals having an "FIO" designation are for information only. The following shall be submitted in accordance with Section 01330 SUBMITTAL PROCEDURES:

SD-01 Data

Components and Equipment Data; FIO.

Manufacturer's catalog data shall be included with the detail drawings for the following items. The data shall be highlighted to show model, size, options, etc., that are intended for consideration. Data shall be adequate to demonstrate compliance with contract requirements for the following:

a. Piping Components

b. Ductwork Components

c. Air Systems Equipment

d. Air Handling Units

e. Terminal Units

SD-04 Drawings

Air Supply, Distribution, Ventilation, and Exhaust Equipment; FIO.

Drawings shall consist of equipment layout including assembly and installation details and electrical connection diagrams; ductwork layout showing the location of all supports and hangers, typical hanger details, gauge reinforcement, reinforcement spacing rigidity classification, and static pressure and seal classifications; and piping layout showing the location of all guides and anchors, the load imposed on each support or anchor, and typical support details. Drawings shall include any information required to demonstrate that the system has been coordinated and will properly function as a unit and shall show equipment relationship to other parts of the work, including clearances required for operation and maintenance.

SD-06 Instructions

Test Procedures; FIO.

Proposed test procedures for piping hydrostatic test, ductwork leak test, and performance tests of systems, at least 2 weeks prior to the start of related testing.

Welding Procedures; FIO.

A copy of qualified welding procedures, at least 2 weeks prior to the start of welding operations.

System Diagrams; FIO.

Proposed diagrams, at least 2 weeks prior to start of related testing. System diagrams that show the layout of equipment, piping, and ductwork, and typed condensed operation manuals explaining preventative maintenance procedures, methods of checking the system for normal, safe operation, and procedures for safely starting and stopping the system shall be framed under glass. After approval, these items shall be posted where directed.

SD-07 Schedules

Test Schedules; FIO.

Proposed test schedules for hydrostatic test of piping, ductwork leak test, and performance tests, at least 2 weeks prior to the start of related testing.

Field Training Schedule; FIO.

Proposed schedule for field training, at least 2 weeks prior to the start of related training.

SD-08 Statements

Similar Services; FIO.

Statement demonstrating successful completion of similar services on at least 5 projects of similar size and scope, at least 2 weeks prior to submittal of other items required by this section.

Welding Qualification; FIO.

A list of names and identification symbols of qualified welders and welding operators, at least 2 weeks prior to the start of welding operations.

SD-09 Reports

Test Reports; FIO.

Test reports for the piping hydrostatic test, ductwork leak test, and performance tests in booklet form, upon completion of testing. Reports shall document phases of tests performed including initial test summary, repairs/adjustments made, and final test results.

SD-13 Certificates

Bolts; FIO.

Written certification from the bolt manufacturer that the bolts furnished comply with the requirements of this specification. The certification shall include illustrations of product markings, and the number of each type of bolt to be furnished.

SD-19 Operation and Maintenance Manuals

Air Supply, Distribution, Ventilation, and Exhaust Manuals; FIO.

Six manuals listing step-by-step procedures required for system startup, operation, shutdown, and routine maintenance, at least 2 weeks prior to field training. The manuals shall include the manufacturer's name, model number, parts list, list of parts and tools that should be kept in stock by the owner for routine maintenance including the name of a local supplier, simplified wiring and controls diagrams, troubleshooting guide, and recommended service organization (including address and telephone number) for each item of equipment. Each service organization submitted shall be capable of providing 4 hour onsite response to a service call on an emergency basis. Instruction and maintenance manuals shall be submitted for approval 30 days following CQC approval of equipment/materials.

PART 2 PRODUCTS

2.1 STANDARD PRODUCTS

Components and equipment shall be standard products of a manufacturer regularly engaged in the manufacturing of products that are of a similar material, design and workmanship. The standard products shall have been in satisfactory commercial or industrial use for 2 years before bid opening. The 2-year experience shall include applications of components and equipment under similar circumstances and of similar size. The 2 years must be satisfactorily completed by a product which has been sold or is offered for sale on the commercial market through advertisements, manufacturers' catalogs, or brochures. Products having less than a 2-year field service record will be acceptable if a certified record of satisfactory field operation, for not less than 6000 hours exclusive of the manufacturer's factory tests, can be shown. The equipment items shall be supported by a service organization.

2.2 ASBESTOS PROHIBITION

Asbestos and asbestos-containing products shall not be used.

2.3 NAMEPLATES

Equipment shall have a nameplate that identifies the manufacturer's name, address, type or style, model or serial number, and catalog number. Equipment shall include air handling units fan coil units, fans, and dehumidifiers.

2.4 EQUIPMENT GUARDS AND ACCESS

Belts, pulleys, chains, gears, couplings, projecting setscrews, keys, and other rotating parts exposed to personnel contact shall be fully enclosed or guarded according to OSHA requirements. High temperature equipment and piping exposed to contact by personnel or where it creates a potential fire hazard shall be properly guarded or covered with insulation of a type specified.

2.5 PIPING COMPONENTS

2.5.1 Steel Pipe

Steel pipe shall conform to ASTM A 53, Schedule 40, Grade A or B, Type E or S.

2.5.2 Joints and Fittings For Steel Pipe

Joints shall be welded, flanged, threaded, as indicated. If not otherwise indicated, piping 25 mm (1 inch) and smaller shall be threaded; piping larger than 25 mm (1 inch) and smaller than 80 mm (3 inches) shall be either threaded, grooved, or welded; and piping 80 mm (3 inches) and larger shall be grooved, welded, or flanged. The manufacturer of each fitting shall be permanently identified on the body of the fitting according to MSS SP-25.

2.5.2.1 Welded Joints and Fittings

Welded fittings shall conform to ASTM A 234/A 234M, and shall be identified with the appropriate grade and marking symbol. Butt-welded fittings shall conform to ASME B16.9. Socket-welded fittings shall conform to ASME B16.11.

2.5.2.2 Flanged Joints and Fittings

Flanges shall conform to ASTM A 181/A 181M and ASME B16.5, Class 150. Gaskets shall be nonasbestos compressed material according to ASME B16.21, 2.0 mm thickness, full face or self-centering flat ring type. The gaskets shall contain aramid fibers bonded with styrene butadiene rubber (SBR) or nitrile butadiene rubber (NBR). Bolts, nuts, and bolt patterns shall conform to ASME B16.5. Bolts shall be high or intermediate strength material conforming to ASTM A 193/A 193M.

2.5.2.3 Threaded Joints and Fittings

Threads shall conform to ASME B1.20.1. Unions shall conform to ASME B16.39, Class 150. Nipples shall conform to ASTM A 733. Malleable iron fittings shall conform to ASME B16.3, type as required to match piping.

2.5.2.4 Dielectric Unions and Flanges

Dielectric unions shall have the tensile strength and dimensional requirements specified. Unions shall have metal connections on both ends threaded to match adjacent piping. Metal parts of dielectric unions shall be separated with a nylon insulator to prevent current flow between dissimilar metals. Unions shall be suitable for the required operating pressures and temperatures. Dielectric flanges shall provide the same pressure ratings as standard flanges and provide complete electrical isolation.

2.5.3 Copper Tube

Copper tube shall conform to ASTM B 88, and ASTM B 88M, Type K or L.

2.5.4 Joints and Fittings For Copper Tube

Wrought copper and bronze solder-joint pressure fittings shall conform to ASME B16.22 and ASTM B 75. Cast copper alloy solder-joint pressure fittings shall conform to ASME B16.18. Cast copper alloy fittings for flared copper tube shall conform to ASME B16.26 and ASTM B 62. Brass or bronze adapters for brazed tubing may be used for connecting tubing to flanges and to threaded ends of valves and equipment. Extracted brazed tee joints produced with an acceptable tool and installed as recommended by the manufacturer may be used.

2.5.5 Valves

Valves shall be Class 125 and shall be suitable for the intended application. Valves shall meet the material, fabrication and operating requirements of ASME B31.1. Chain operators shall be provided for valves located 3 meters or higher above the floor.

2.5.5.1 Gate Valves

Gate valves 65 mm (2-1/2 inches) and smaller shall conform to MSS SP-80 and shall be bronze with rising stem and threaded, solder, or flanged ends. Gate valves 80 mm (3 inches) and larger shall conform to MSS SP-70 and shall be cast iron with bronze trim, outside screw and yoke, and flanged or threaded ends.

2.5.5.2 Globe Valves

Globe valves 65 mm (2-1/2 inches) and smaller shall conform to MSS SP-80,

bronze, threaded, soldered, or flanged ends. Globe valves 80 mm (3 inches) and larger shall conform to MSS SP-85 and shall be cast iron with bronze trim and flanged, or threaded ends.

2.5.5.3 Check Valves

Check valves 65 mm (2-1/2 inches) and smaller shall conform to MSS SP-80 and shall be bronze with threaded, soldered, or flanged ends. Check valves 80 mm (3 inches) and larger shall conform to MSS SP-71and shall be cast iron with bronze trim and flanged or threaded ends.

2.5.5.4 Angle Valves

Angle valves 65 mm (2-1/2 inches) and smaller shall conform to MSS SP-80 and shall be bronze with threaded, soldered, or flanged ends. Angle valves 80 mm (3 inches) and larger shall conform to MSS SP-85and shall be cast iron with bronze trim and flanged, or threaded ends.

2.5.5.5 Ball Valves

Ball valves 15 mm (1/2 inch) and larger shall conform to MSS SP-72 or MSS SP-110, and shall be ductile iron or bronze with threaded, soldered, or flanged ends.

2.5.5.6 Butterfly Valves

Butterfly valves shall be 2 flange or lug wafer type, and shall be bubble-tight at 1.03 MPa. Valve bodies shall be cast iron or malleable iron. ASTM A 167, Type 404 or Type 316, corrosion resisting steel stems, bronze or corrosion resisting steel discs, and synthetic rubber seats shall be provided. Valves smaller than 200 mm (8 inches) shall have throttling handles with a minimum of seven locking positions. Valves 200 mm (8 inches) and larger shall have totally enclosed manual gear operators with adjustable balance return stops and position indicators. Valves in insulated lines shall have extended neck to accommodate insulation thickness.

2.5.5.7 Balancing Valves

Balancing valves 50 mm (2 inches) or smaller shall be bronze with NPT connections for black steel pipe and brazed connections for copper tubing. Valves 65 mm or larger may be all iron with threaded or flanged ends. The valves shall have a square head or similar device and an indicator arc and shall be designed for 120 degrees C. Iron valves shall be lubricated, nonlubricated, or tetrafluoroethylene resin-coated plug valves. In lieu of plug valves, ball valves may be used. Plug valves and ball valves 200 mm (8 inches) or larger shall be provided with manual gear operators with position indicators. Where indicated, automatic flow control valves may be provided to maintain constant flow, and shall be designed to be sensitive to pressure differential across the valve to provide the required opening. Valves shall be selected for the flow required and provided with a permanent nameplate or tag carrying a permanent record of the factory-determined flow rate and flow control pressure levels. Valves shall control the flow within 5 percent of the tag rating. Valves shall be suitable for the maximum operating pressure of 862 kPa (125 psig) or 150 percent of the system operating pressure, whichever is the greater. Where the available system pressure is not adequate to provide the minimum pressure differential that still allows flow control, the system pump head capability shall be appropriately increased. Where flow readings are

provided by remote or portable meters, valve bodies shall be provided with tapped openings and pipe extensions with shutoff valves outside of pipe insulation. The pipe extensions shall be provided with quick connecting hose fittings for a portable meter to measure the pressure differential across the automatic flow control valve. A portable meter furnished with accessory kit as recommended by the automatic valve manufacturer shall be provided. Automatic flow control valve specified may be substituted for venturi tubes or orifice plate flow measuring devices.

2.5.5.8 Air Vents

Manual air vents shall be brass or bronze valves or cocks suitable for pressure rating of piping system and furnished with threaded plugs or caps. Automatic air vents shall be float type, cast iron, stainless steel, or forged steel construction, suitable for pressure rating of piping system.

2.5.6 Strainers

Strainer shall be in accordance with ASTM F 1199, except as modified herein. Strainer shall be the cleanable, basket or "Y" type, the same size as the pipeline. The strainer bodies shall be fabricated of cast iron with bottoms drilled, and tapped. The bodies shall have arrows clearly cast on the sides indicating the direction of flow. Each strainer shall be equipped with removable cover and sediment screen. The screen shall be made of minimum 0.8 mm (22 gauge) corrosion-resistant steel, with small perforations numbering not less than 60 per square centimeter (400 per square inch) to provide a net free area through the basket of at least 3,300 times that of the entering pipe. The flow shall be into the screen and out through the perforations.

2.5.7 Backflow Preventers

Backflow preventers shall be according to Section 15400 PLUMBING, GENERAL PURPOSE.

2.5.8 Flexible Pipe Connectors

Flexible pipe connectors shall be designed for 862 kPa (125 psi) or 1034 kPa (150 psi) service as appropriate for the static head plus the system head, and 120 degrees C. The flexible section shall be constructed of rubber, tetrafluoroethylene resin, or corrosion-resisting steel, bronze or monel. The flexible section shall be suitable for intended service with end connections to match adjacent piping. Flanged assemblies shall be equipped with limit bolts to restrict maximum travel to the manufacturer's standard limits. Unless otherwise indicated, the length of the flexible connectors shall be as recommended by the manufacturer for the service intended. Internal sleeves or liners, compatible with circulating medium, shall be provided when recommended by the manufacturer. Covers to protect the bellows shall be provided where indicated.

2.5.9 Pressure Gauges

Gauges shall conform to ASME B40.1 and shall be provided with throttling type needle valve or a pulsation dampener and shut-off valve. Gauge shall be a minimum of 85 mm in diameter and shall have a range from 0 kPa to approximately 1.5 times the maximum system working pressure.

2.5.10 Thermometers

Thermometers shall have brass, malleable iron, or aluminum alloy case and frame, clear protective face, permanently stabilized glass tube with indicating-fluid column, white face, black numbers, and a 225 mm (9 inch) scale, and shall have rigid stems with straight, angular, or inclined pattern.

2.5.11 Escutcheons

Escutcheons shall be chromium-plated iron or chromium-plated brass, either one piece or split pattern, held in place by internal spring tension or setscrews.

2.5.12 Pipe Hangers, Inserts, and Supports

Pipe hangers, inserts, and supports shall conform to MSS SP-58 and MSS SP-69.

2.5.13 Expansion Joints

2.5.13.1 Slip Joints

Expansion joints shall provide for either single or double slip of the connected pipes, as required or indicated, and for not less than the traverse indicated. The joints shall be designed for working temperature and pressure suitable for the application, but not less than 1034 kPa (150 psig), and shall be according to applicable requirements of EJMA-01 and ASME B31.1. End connections shall be flanged or beveled for welding as indicated. Joint shall be provided with an anchor base where required or indicated. Where adjoining pipe is carbon steel, the sliding slip shall be seamless steel plated with a minimum of 0.058 mm of hard chrome according to ASTM B 650. All joint components shall be suitable for the intended service. Initial setting shall be made according to the manufacturer's recommendations to compensate for ambient temperature at time of installation. Pipe alignment guides shall be installed as recommended by the joint manufacturer, but in any case shall be not more than 1.5 m from expansion joint except that in lines 100 mm (4 inches) or smaller, guides shall be installed not more than 600 mm from the joint. Service outlets shall be provided where indicated.

2.5.13.2 Flexible Ball Joints

Flexible ball joints shall conform to EJMA-01 and ASME B31.1 and be constructed of alloys as appropriate for the service intended. Where so indicated, the ball joint shall be designed for packing injection under full line pressure to contain leakage. The joint ends shall be threaded to 50 mm (2 inches) only, grooved, flanged, or beveled for welding as indicated or required and shall be capable of absorbing a minimum of 15-degree angular flex and 360 degree rotation. Balls and sockets shall be suitable for the intended service. The exterior spherical surface of carbon steel balls shall be plated with mils of hard chrome according to ASTM B 650. The ball type joints shall be designed and constructed according to EJMA-01 and ASME B31.1 where applicable. Where required, flanges shall conform to ASME B16.5.

2.5.13.3 Bellows Type Joints

Bellows type joints shall be flexible, guided expansion joints. The expansion element shall be stabilized corrosion resistant steel. Bellows type expansion joints shall conform to the applicable requirements of EJMA-01 with internal sleeves. Guiding of piping on both sides of

expansion joint shall be according to the published recommendations of the manufacturer of the expansion joint. The joints shall be designed for the working temperature and pressure suitable for the application but not less than 1034 kPa (150 psig).

2.5.14 Insulation

Shop and field applied insulation shall be as specified in Section 15080 THERMAL INSULATION FOR MECHANICAL SYSTEMS.

2.5.15 Condensate Drain Lines

Condensate drainage shall be provided for each item of equipment that generates condensate as specified for drain, waste, and vent piping systems in Section 15400 PLUMBING, GENERAL PURPOSE.

2.6 ELECTRICAL WORK

Electrical motor-driven equipment specified shall be provided complete with motor, motor starter, and controls. Unless otherwise specified, electric equipment, including wiring and motor efficiencies, shall be according to Section 16415 ELECTRICAL WORK, INTERIOR. Electrical characteristics and enclosure type shall be as shown. Unless otherwise indicated, motors of 745 W and above shall be high efficiency type. Motor starters shall be provided complete with thermal overload protection and other appurtenances necessary. Each motor shall be according to NEMA MG 1 and shall be of sufficient size to drive the equipment at the specified capacity without exceeding the nameplate rating of the motor. Manual or automatic control and protective or signal devices required for the operation specified, and any control wiring required for controls and devices, but not shown, shall be provided. Where two-speed or variable-speed motors are indicated, solid-state variable-speed controller may be provided to accomplish the same function. Solid-state variable-speed controllers shall be utilized for motors rated 7.45 kW (10 hp) or less. Adjustable frequency drives shall be used for larger motors.

2.7 CONTROLS

Controls shall be provided as specified in Section 15951 DIRECT DIGITAL CONTROL FOR HVAC.

2.8 DUCTWORK COMPONENTS

2.8.1 Metal Ductwork

All aspects of metal ductwork construction, including all fittings and components, shall comply with SMACNA-06 unless otherwise specified. Elbows shall be radius type with a centerline radius of 1-1/2 times the width or diameter of the duct where space permits. Otherwise, elbows having a minimum radius equal to the width or diameter of the duct or square elbows with factory fabricated turning vanes may be used. Static pressure up to Class 500 Pa (2 inch w.g.) ductwork shall meet the requirements of Seal Class C. Class 750 through 1500 Pa (3 through 6 inch) shall meet the requirements of Seal Class A. Sealants shall conform to fire hazard classification specified in Section 15080 THERMAL INSULATION FOR MECHANICAL SYSTEMS. Pressure sensitive tape shall not be used as a sealant. Spiral lock seam duct, and flat oval shall be made with duct sealant and locked with not less than 3 equally spaced drive screws or other approved methods indicated in SMACNA-06. The sealant shall be applied to the exposed male

part of the fitting collar so that the sealer will be on the inside of the joint and fully protected by the metal of the duct fitting. One brush coat of the sealant shall be applied over the outside of the joint to at least 50 mm band width covering all screw heads and joint gap. Dents in the male portion of the slip fitting collar will not be acceptable. Outdoor air intake ducts and plenums shall be fabricated with watertight soldered or brazed joints and seams.

2.8.1.1 Transitions

Diverging air flow transitions shall be made with each side pitched out a maximum of 15 degrees, for an included angle of 30 degrees. Transitions for converging air flow shall be made with each side pitched in a maximum of 30 degrees, for an included angle of 60 degrees, or shall be as indicated. Factory-fabricated reducing fittings for systems using round duct sections when formed to the shape of the ASME short flow nozzle, need not comply with the maximum angles specified.

2.8.1.2 Metallic Flexible Duct

Metallic type duct shall be single-ply galvanized steel, self supporting to 2.4 m spans. Duct shall be of corrugated/interlocked, folded and knurled type seam construction, bendable without damage through 180 degrees with a throat radius equal to 1/2 duct diameter. Duct shall conform to UL 181and shall be rated for positive or negative working pressure of 3.75 kPa (15 inches water gauge) at 177 degrees C (350 degrees F) when duct is aluminum, and 343 degrees C (650 degrees F) when duct is galvanized steel or stainless steel.

2.8.1.3 Insulated Nonmetallic Flexible Duct Runouts

Flexible duct runouts shall be used only where indicated. Runout length shall be as shown on the drawings, but shall in no case exceed 3 m. Runouts shall be preinsulated, factory fabricated, and shall comply with NFPA 90A and UL 181. Either field or factory applied vapor barrier shall be provided. Where coil induction or high velocity units are supplied with vertical air inlets, a streamlined and vaned and mitered elbow transition piece shall be provided for connection to the flexible duct or hose. The last elbow to these units, other than the vertical air inlet type, shall be a die-stamped elbow and not a flexible connector. Insulated flexible connectors may be used as runouts. The insulated material and vapor barrier shall conform to the requirements of Section 15080 THERMAL INSULATION FOR MECHANICAL SYSTEMS. The insulation material surface shall not be exposed to the air stream.

2.8.1.4 General Service Duct Connectors

A flexible duct connector approximately 150 mm in width shall be provided where sheet metal connections are made to fans or where ducts of dissimilar metals are connected. For round/oval ducts, the flexible material shall be secured by stainless steel, clinch-type draw bands. For rectangular ducts, the flexible material locked to metal collars shall be installed using normal duct construction methods. The composite connector system shall comply with UL 214 and be classified as "flame-retarded fabrics" in UL Bld Mat Dir.

2.8.1.5 High Temperature Service Duct Connections

Material shall be approximately 2.38 mm thick, 1.2 to 1.36 kg per square

meter (35 to 40-ounce per square yard) weight, plain weave fibrous glass cloth with, nickel/chrome wire reinforcement for service in excess of 650 degrees C.

2.8.2 Ductwork Accessories

2.8.2.1 Duct Access Doors

Access doors shall be provided in ductwork and plenums where indicated and at all air flow measuring primaries, automatic dampers, fire dampers, coils, thermostats, and other apparatus requiring service and inspection in the duct system, and unless otherwise shown, shall conform to SMACNA-06. Access doors shall be provided upstream and downstream of air flow measuring primaries and heating and cooling coils. Doors shall be minimum 375 x 450 mm, unless otherwise shown. Where duct size will not accommodate this size door, the doors shall be made as large as practicable. Doors 600 x 600 mm or larger shall be provided with fasteners operable from both sides. Doors in insulated ducts shall be the insulated type.

2.8.2.2 Fire Dampers

Fire dampers shall be 1-1/2 hour fire rated unless otherwise indicated. Fire dampers shall conform to the requirements of NFPA 90A and UL 555. Fire dampers shall be automatic operating type and shall have a dynamic rating suitable for the maximum air velocity and pressure differential to which it will be subjected. Fire dampers shall be approved for the specific application, and shall be installed according to their listing. Fire dampers shall be equipped with a steel sleeve or adequately sized frame installed in such a manner that disruption of the attached ductwork, if any, will not impair the operation of the damper. Sleeves or frames shall be equipped with perimeter mounting angles attached on both sides of the wall or floor opening. Ductwork in fire-rated floor-ceiling or roof-ceiling assembly systems with air ducts that pierce the ceiling of the assemblies shall be constructed in conformance with UL Fire Resist Dir. Fire dampers shall be curtain type with damper blades out of the air stream. Dampers shall not reduce the duct or the air transfer opening cross-sectional area. Dampers shall be installed so that the centerline of the damper depth or thickness is located in the centerline of the wall, partition or floor slab depth or thickness. Unless otherwise indicated, the installation details given in SMACNA-05 and in manufacturer's instructions for fire dampers shall be followed.

2.8.2.3 Splitters and Manual Balancing Dampers

Splitters and manual balancing dampers shall be furnished with accessible operating mechanisms. Where operators occur in finished portions of the building, operators shall be chromium plated with all exposed edges rounded. Splitters shall be operated by quadrant operators or 5 mm (3/16 inch) rod brought through the side of the duct with locking setscrew and bushing. Two rods are required on splitters over 200 mm (8 inches). Manual volume control dampers shall be operated by locking-type quadrant operators. Dampers and splitters shall be 2 gauges heavier than the duct in which installed. Unless otherwise indicated, multileaf dampers shall be opposed blade type with maximum blade width of 300 mm. Access doors or panels shall be provided for all concealed damper operators and locking setscrews. Unless otherwise indicated, the locking-type quadrant operators for dampers, when installed on ducts to be thermally insulated, shall be provided with stand-off mounting brackets, bases, or adapters to provide

clearance between the duct surface and the operator not less than the thickness of the insulation. Stand-off mounting items shall be integral with the operator or standard accessory of the damper manufacturer. Volume dampers shall be provided where indicated.

2.8.2.4 Air Deflectors and Branch Connections

Air deflectors shall be provided at duct mounted supply outlets, at takeoff or extension collars to supply outlets, at duct branch takeoff connections, and at 90 degree elbows, as well as at locations as indicated on the drawings or otherwise specified. Conical branch connections or 45 degree entry connections may be used in lieu of deflectors or extractors for branch connections. All air deflectors, except those installed in 90 degree elbows, shall be provided with an approved means of adjustment. Adjustment shall be made from easily accessible means inside the duct or from an adjustment with sturdy lock on the face of the duct. When installed on ducts to be thermally insulated, external adjustments shall be provided with stand-off mounting brackets, integral with the adjustment device, to provide clearance between the duct surface and the adjustment device not less than the thickness of the thermal insulation. Air deflectors shall be factory-fabricated units consisting of curved turning vanes or louver blades designed to provide uniform air distribution and change of direction with minimum turbulence or pressure loss. Air deflectors shall be factory or field assembled. Blade air deflectors, also called blade air extractors, shall be approved factory fabricated units consisting of equalizing grid and adjustable blade and lock. Adjustment shall be easily made from the face of the diffuser or by position adjustment and lock external to the duct. Stand-off brackets shall be provided on insulated ducts and are described herein. Fixed air deflectors, also called turning vanes, shall be provided in 90 degree elbows.

2.8.3 Duct Sleeves, Framed Prepared Openings, Closure Collars

2.8.3.1 Duct Sleeves

Duct sleeves shall be provided for round ducts 375 mm in diameter or less passing through floors, walls, ceilings, or roof, and installed during construction of the floor, wall, ceiling, or roof. Round ducts larger than 375 mm in diameter and square, rectangular, and oval ducts passing through floors, walls, ceilings, or roof shall be installed through framed prepared openings. The Contractor shall be responsible for the proper size and location of sleeves and prepared openings. Sleeves and framed openings are also required where grilles, registers, and diffusers are installed at the openings. Framed prepared openings shall be fabricated from 1.0 mm (20 gauge) galvanized steel, unless otherwise indicated. Where sleeves are installed in bearing walls or partitions, black steel pipe, ASTM A 53, Schedule 20 shall be used. Sleeve shall provide 25 mm clearance between the duct and the sleeve or 25 mm clearance between the insulation and the sleeve for insulated ducts.

2.8.3.2 Framed Prepared Openings

Openings shall have 25 mm clearance between the duct and the opening or 25 mm clearance between the insulation and the opening for insulated ducts.

2.8.3.3 Closure Collars

Collars shall be fabricated of galvanized sheet metal not less than 100 mm

wide, unless otherwise indicated, and shall be installed on exposed ducts on each side of walls or floors where sleeves or prepared openings are provided. Collars shall be installed tight against surfaces. Collars shall fit snugly around the duct or insulation. Sharp edges of the collar around insulated duct shall be ground smooth to preclude tearing or puncturing the insulation covering or vapor barrier. Collars for round ducts 375 mm in diameter or less shall be fabricated from 1.0 mm (20 gauge) galvanized steel. Collars for round ducts larger than 375 mm and square, and rectangular ducts shall be fabricated from 1.3 mm (18 gauge) galvanized steel. Collars shall be installed with fasteners on maximum 150 mm centers, except that not less than 4 fasteners shall be used.

2.8.4 Diffusers, Registers, and Grilles

Units shall be factory-fabricated of steel, corrosion-resistant steel, or aluminum and shall distribute the specified quantity of air evenly over space intended without causing noticeable drafts, air movement faster than 0.25 m/s (50 fpm) in occupied zone, or dead spots anywhere in the conditioned area. Outlets for diffusion, spread, throw, and noise level shall be as required for specified performance. Performance shall be certified according to ASHRAE 70. Inlets and outlets shall be sound rated and certified according to ASHRAE 70. Sound power level shall be as indicated. Diffusers and registers shall be provided with volume damper with accessible operator, unless otherwise indicated; or if standard with the manufacturer, an automatically controlled device will be acceptable. Volume dampers shall be opposed blade type for all diffusers and registers, except linear slot diffusers. Linear slot diffusers shall be provided with round or elliptical balancing dampers. Where the inlet and outlet openings are located less than 2 m above the floor, they shall be protected by a grille or screen according to NFPA 90A.

2.8.4.1 Diffusers

Diffuser types shall be as indicated. Ceiling mounted units shall be furnished with anti-smudge devices, unless the diffuser unit minimizes ceiling smudging through design features. Diffusers shall be provided with air deflectors of the type indicated. Air handling troffers or combination light and ceiling diffusers shall conform to the requirements of UL Elec Const Dir for the interchangeable use as cooled or heated air supply diffusers or return air units. Ceiling mounted units shall be installed with rims tight against ceiling. Sponge rubber gaskets shall be provided between ceiling and surface mounted diffusers for air leakage control. Suitable trim shall be provided for flush mounted diffusers. Duct collar connecting the duct to diffuser shall be airtight and shall not interfere with volume controller. Return or exhaust units shall be similar to supply diffusers.

2.8.4.2 Registers and Grilles

Units shall be four-way directional-control type, except that return and exhaust registers may be fixed horizontal or vertical louver type similar in appearance to the supply register face. Registers shall be provided with sponge-rubber gasket between flanges and wall or ceiling. Wall supply registers shall be installed at least 150 mm below the ceiling unless otherwise indicated. Return and exhaust registers shall be located 150 mm above the floor unless otherwise indicated. Four-way directional control may be achieved by a grille face which can be rotated in 4 positions or by adjustment of horizontal and vertical vanes. Grilles shall be as specified for registers, without volume control damper.

2.8.5 Louvers

Louvers for installation in exterior walls which are associated with the air supply and distribution system shall be as specified in Section 07600 SHEET METALWORK, GENERAL.

2.8.6 Air Vents, Penthouses, and Goosenecks

Air vents, penthouses, and goosenecks shall be fabricated from galvanized steel or aluminum sheets with galvanized or aluminum structural shapes. Sheet metal thickness, reinforcement, and fabrication shall conform to SMACNA-06. Louver blades shall be accurately fitted and secured to frames. Edges of louver blades shall be folded or beaded for rigidity and baffled to exclude driving rain. Air vents, penthouses, and goosenecks shall be provided with bird screen.

2.8.7 Bird Screens and Frames

Bird screens shall conform to ASTM E 437, Type I, Class 1, 2 by 2 mesh, 1.6 mm diameter aluminum wire or 0.8 mm inch diameter stainless steel wire. Frames shall be removable type or stainless steel or extruded aluminum.

2.9 AIR SYSTEMS EQUIPMENT

2.9.1 Fans

Fans shall be tested and rated according to AMCA ANSI/AMCA 210. Fans may be connected to the motors either directly or indirectly with V-belt drive. V-belt drives shall be designed for not less than 140 percent of the connected driving capacity. Motor sheaves shall be variable pitch for 11 kW (15 hp) and below and fixed pitch as defined by ARI Guideline D. Variable pitch sheaves shall be selected to drive the fan at a speed which will produce the specified capacity when set at the approximate midpoint of the sheave adjustment. When fixed pitch sheaves are furnished, a replaceable sheave shall be provided when needed to achieve system air balance. Motors for V-belt drives shall be provided with adjustable rails or bases. Removable metal guards shall be provided for all exposed V-belt drives, and speed-test openings shall be provided at the center of all rotating shafts. Fans shall be provided with personnel screens or guards on both suction and supply ends, except that the screens need not be provided, unless otherwise indicated, where ducts are connected to the fan. Fan and motor assemblies shall be provided with vibration-isolation supports or mountings as indicated. Vibration-isolation units shall be standard products with published loading ratings. Each fan shall be selected to produce the capacity required at the fan static pressure indicated. Sound power level shall be as indicated. The sound power level values shall be obtained according to AMCA 300. Standard AMCA arrangement, rotation, and discharge shall be as indicated.

2.9.1.1 Centrifugal Fans

Centrifugal fans shall be fully enclosed, single-width single-inlet, or double-width double-inlet, AMCA Pressure Class I, II, or III as required or indicated for the design system pressure. Impeller wheels shall be rigidly constructed, accurately balanced both statically and dynamically. Fan blades may be backward-inclined or airfoil design in wheel sizes up to 750 mm (30 inches). Fan blades for wheels over 750 mm (30 inches) in diameter shall be backward-inclined or airfoil design. Booster fans for

exhaust dryer systems shall be the open-wheel radial type. These fans shall be suitable for conveying lint and the temperatures encountered. The fan shaft shall be provided with a heat slinger to dissipate heat buildup along the shaft. An access (service) door to facilitate maintenance shall be supplied with these fans. Fan wheels over 900 mm (36 inches) in diameter shall have overhung pulleys and a bearing on each side of the wheel. Fan wheels 900 mm (36 inches) or less in diameter may have one or more extra long bearings between the fan wheel and the drive. Bearings shall be sleeve type, self-aligning and self-oiling with oil reservoirs, or precision self-aligning roller or ball-type with accessible grease fittings or permanently lubricated type. Grease fittings shall be connected to tubing and serviceable from a single accessible point. Bearing life shall be L50 rated at not less than 200,000 hours as defined by ABEMA Std 9 and ABEMA Std 11. Fan shafts shall be steel, accurately finished, and shall be provided with key seats and keys for impeller hubs and fan pulleys. Each fan outlet shall be of ample proportions and shall be designed for the attachment of angles and bolts for attaching flexible connections. Manually operated outlet dampers shall be provided. Motors, unless otherwise indicated, shall not exceed 1800 rpm and shall have open dripproof enclosures. Motor starters shall be manual across-the-line type with general-purpose enclosure. Remote manual switch shall be provided where indicated.

2.9.1.2 In-Line Centrifugal Fans

In-line fans shall have centrifugal backward inclined blades, stationary discharge conversion vanes, internal and external belt guards, and adjustable motor mounts. Fans shall be mounted in a square, heavy gauge galvanized steel housing. Air shall enter and leave the fan axially. Inlets shall be streamlined with conversion vanes to eliminate turbulence and provide smooth discharge air flow. Fan bearings and drive shafts shall be enclosed and isolated from the air stream. Fan bearings shall be sealed against dust and dirt and shall be permanently lubricated, and shall be precision self aligning ball or roller type. Bearing life shall be L50 rated at not less than 200,000 hours as defined by ABEMA Std 9 and ABEMA Std 11. Motors shall have open dripproof enclosure. Motor starters shall be manual across-the-line with general-purpose enclosures. Remote manual switch shall be provided where indicated.

2.9.1.3 Panel Type Power Wall Ventilators

Fans shall be propeller type, assembled on a reinforced metal panel with venturi opening spun into panel. Fans with wheels less than 600 mm (24 inches) diameter shall be direct or V-belt driven and fans with wheels 600 mm (24 inches) diameter and larger shall be V-belt drive type. Fans shall be furnished with wall mounting collar. Lubricated bearings shall be provided. Fans shall be fitted with wheel and motor side metal or wire guards which have a corrosion-resistant finish. Motor enclosure shall be dripproof type. Gravity backdraft dampers shall be provided where indicated.

2.9.1.4 Centrifugal Type Power Wall Ventilators

Fans shall be direct or V-belt driven centrifugal type with backward inclined, non-overloading wheel. Motor housing shall be removable and weatherproof. Unit housing shall be designed for sealing to building surface and for discharge and condensate drippage away from building surface. Housing shall be constructed of heavy gauge aluminum. Unit shall be fitted with an aluminum or plated steel wire discharge bird screen,

anodized aluminum wall grille, manufacturer's standard gravity damper, an airtight and liquid-tight metallic wall sleeve. Motor enclosure shall be dripproof type. Lubricated bearings shall be provided.

2.9.1.5 Centrifugal Type Power Roof Ventilators

Fans shall be direct or V-belt driven with backward inclined, non-overloading wheel. Motor compartment housing shall be hinged or removable and weatherproof, constructed of heavy gauge aluminum. Fans shall be provided with birdscreen, disconnect switch, gravity motorized dampers, roof curb, and extended base when indicated. Motors enclosure shall be dripproof type. Grease-laden kitchen exhaust fans shall be centrifugal type according to UL 705 and fitted with V-belt drive, round hood, and windband upblast discharge configuration, integral residue trough and collection device, motor and power transmission components located in outside positively air ventilated compartment. Lubricated bearings shall be provided.

2.9.1.6 Air-Curtain Fans

Air curtains shall be provided with a weatherproof housing constructed of high impact plastic or minimum 1.3 mm (18 gauge) rigid welded steel. Fan wheels shall be backward curved, non-overloading, centrifugal type and accurately balanced statically and dynamically. Motors shall have totally enclosed fan cooled enclosures. Motor starters shall be remote manual type with weather-resistant enclosure actuated when the doorway served is open. The air curtains shall attain the air velocities specified within 2 seconds following activation. Air intake and discharge openings shall be protected by bird screens. Air curtain unit or a multiple unit installation shall be at least as wide as the opening to be protected. The air discharge openings shall be so designed and equipped as to permit outward adjustment of the discharge air. Adjustment and installation placement shall be according to the manufacturer's written recommendation. Directional controls on air curtains for service windows shall be designed to be easily cleanable or readily removable. Air curtains shall be designed to prevent the adjustment of the air velocities specified. The interior surfaces of the air curtain units shall be accessible for cleaning. Certified test data indicating that the fan will provide the air velocities required when fan is mounted as indicated shall be furnished. Air curtains designed as fly fans shall be provided where indicated. Air curtains designed for use in service entranceways shall develop an air curtain not less than 75 mm thick at the discharge nozzle. The air velocity shall be not less than 8 m/s across the entire entryway when measured 900 mm above the floor. Air curtains designed for use on customer entranceways shall develop an air curtain not less than 200 mm thick at the discharge opening. The velocity shall be not less than 3 m/s across the entire entryway when measured 900 mm above the floor. Recirculating type air curtains shall be equipped with readily removable filters, or the filters shall be designed for in-position cleaning. The air capture compartment shall be readily accessible and easily cleanable or designed for in-position cleaning. Air curtains designed for use on service windows shall develop an air curtain not less than 200 mm thick at the discharge opening. The air velocity shall be not less than 3 m/s across the entire opening of the service window measured 900 mm below the air discharge opening.

2.9.1.7 Ceiling Exhaust Fans

Suspended cabinet-type ceiling exhaust fans shall be centrifugal type, direct-driven. Fans shall have acoustically insulated housing. Integral

backdraft damper shall be chatter-proof. The integral face grille shall be of egg-crate design or louver design. Fan motors shall be mounted on vibration isolators. Unit shall be provided with mounting flange for hanging unit from above. Fans shall be U.L. listed.

2.9.2 Coils

Coils shall be fin-and-tube type constructed of seamless copper tubes and copper fins mechanically bonded or soldered to the tubes. Coils shall be protected with a minimum 0.076 mm thick flood coated phenolic coating. Casing and tube support sheets shall be not lighter than 1.6 mm (16 gauge) galvanized steel, formed to provide structural strength. When required, multiple tube supports shall be provided to prevent tube sag. Each coil shall be tested at the factory under water at not less than 2.76 MPa (400 psi) air pressure and shall be suitable for 1.38 MPa (200 psi) working pressure. Coils shall be mounted for counterflow service. Coils shall be rated and certified according to ARI ANSI/ARI 410.

2.9.2.1 Direct-Expansion Coils

Direct-expansion coils shall be suitable for the refrigerant involved. Suction headers shall be seamless copper tubing or seamless or resistance welded steel tube with copper connections. Supply headers shall consist of a distributor which shall distribute the refrigerant through seamless copper tubing equally to all circuits in the coil. Tubes shall be circuited to ensure minimum pressure drop and maximum heat transfer. Circuiting shall permit refrigerant flow from inlet to suction outlet without causing oil slugging or restricting refrigerant flow in coil. Each coil to be field installed shall be completely dehydrated and sealed at the factory upon completion of pressure tests.

2.9.2.2 Water Coils

Water coils shall be circuited for a suitable water velocity without excessive pressure drop. Headers shall be constructed of cast iron, welded steel or copper. Each coil shall be provided with a plugged vent and drain connection extending through the unit casing.

2.9.3 Air Filters

Air filters shall be listed according to requirements of UL 900, except high efficiency particulate air filters of 99.97 percent efficiency by the DOP Test method shall be as listed under the Label Service and shall meet the requirements of UL 586.

2.9.3.1 Extended Surface Pleated Panel Filters

Filters shall be 50 mm (2 inch) depth, sectional, disposable type of the size indicated and shall have an average efficiency of 25 to 30 percent when tested according to ASHRAE 52.1. Initial resistance at 2.54 m/s (500 feet per minute) shall not exceed 9 mm water gauge. Filters shall be UL Class 2. Media shall be nonwoven cotton and synthetic fiber mat. A wire support grid bonded to the media shall be attached to a moisture resistant fiberboard frame. All four edges of the filter media shall be bonded to the inside of the frame to prevent air bypass and increase rigidity.

2.9.3.2 Range and Griddle Hood Service

Filter shall be sectional, permanent, washable, all metallic media type,

nominal thick, with suitable metal frames, designed for extraction of grease from grease-laden air. Clean filter static pressure drop shall not exceed Home Ventilating Institute rating when handling 165 L/s (350 cfm) air.

2.9.3.3 Holding Frames

Frames shall be fabricated from not lighter than 1.6 mm (16 gauge) sheet steel with rust-inhibitor coating. Each holding frame shall be equipped with suitable filter holding devices. Holding frame seats shall be gasketed. All joints shall be airtight.

2.9.3.4 Filter Gauges

Filter gauges shall be dial type, diaphragm actuated draft and shall be provided for all filter stations, including those filters which are furnished as integral parts of factory fabricated air handling units. Gauges shall be at least 98 mm (3-7/8 inches) in diameter, shall have white dials with black figures, and shall be graduated in 0.25 mm (0.01 inch), and shall have a minimum range of 25 mm beyond the specified final resistance for the filter bank on which each gauge is applied. Each gauge shall incorporate a screw operated zero adjustment and shall be furnished complete with two static pressure tips with integral compression fittings, two molded plastic vent valves, two 1.5 m (5 foot) minimum lengths of 6.35 mm (1/4 inch) diameter aluminum tubing, and all hardware and accessories for gauge mounting.

2.10 AIR HANDLING UNITS

2.10.1 Factory-Fabricated Air Handling Units

Units shall be single-zone draw-through type as indicated. Units shall include fans, coils, airtight insulated casing, adjustable V-belt drives, belt guards for externally mounted motors, access sections where indicated, combination sectional filter-mixing box, vibration-isolators, and appurtenances required for specified operation. Vibration isolators shall be as indicated. Each air handling unit shall have physical dimensions suitable to fit space allotted to the unit and shall have the capacity indicated. Air handling unit shall have published ratings based on tests performed according to ARI ANSI/ARI 430.

2.10.1.1 Casings

Casing sections shall be 2 inch double wall type constructed of a minimum 18 gauge galvanized steel, or 18 gauge steel outer casing protected with a corrosion resistant paint finish according to paragraph FACTORY PAINTING. Casing shall be designed and constructed with an integral structural steel frame such that exterior panels are non-load bearing. Exterior panels shall be individually removable. Removal shall not affect the structural integrity of the unit. Casings shall be provided with inspection doors, access sections, and access doors as indicated. Inspection and access doors shall be insulated, fully gasketed, double-wall type, of a minimum 1.3 mm (18 gauge) outer and 1.0 mm (20 gauge) inner panels. Doors shall be rigid and provided with heavy duty hinges and latches. Inspection doors shall be a minimum 300 mm wide by 300 mm high. Access doors shall be minimum 600 mm wide and shall be the full height of the unit casing or a minimum of 1800 mm, whichever is less. Access Sections shall be according to paragraph AIR HANDLING UNITS. Drain pan shall be double-bottom type constructed of 16 gauge stainless steel, pitched to the drain connection.

Drain pans shall be constructed water tight, treated to prevent corrosion, and designed for positive condensate drainage. When 2 or more cooling coils are used, with one stacked above the other, condensate from the upper coils shall not flow across the face of lower coils. Intermediate drain pans or condensate collection channels and downspouts shall be provided, as required to carry condensate to the unit drain pan out of the air stream and without moisture carryover. Each casing section handling conditioned air shall be insulated with not less than 25 mm (1 inch) thick, 24 kg per cubic meter (1-1/2 pound density) coated fibrous glass material having a thermal conductivity not greater than 0.033 W/m-K (0.23 Btu/hr-sf-F). Casing shall be insulated to prevent any sweating on the exterior of the casing. Factory applied fibrous glass insulation shall conform to ASTM C 1071, except that the minimum thickness and density requirements do not apply, and shall meet the requirements of NFPA 90A. Foam-type insulation is not acceptable. Foil-faced insulation shall not be an acceptable substitute for use on double-wall access doors and inspections doors and casing sections. Duct liner material, coating, and adhesive shall conform to fire-hazard requirements specified in Section 15080 THERMAL INSULATION FOR MECHANICAL SYSTEMS. Exposed insulation edges and joints where insulation panels are butted together shall be protected with a metal nosing strip or shall be coated to conform to meet erosion resistance requirements of ASTM C 1071. A latched and hinged inspection door, shall be provided in the fan and coil sections.

2.10.1.2 Cooling Coils

Coils shall be provided as specified in paragraph AIR SYSTEMS EQUIPMENT, for types indicated.

2.10.1.3 Air Filters

Air filters shall be as specified in paragraph AIR SYSTEMS EQUIPMENT for types and thickness indicated.

2.10.1.4 Fans

Fans shall be double-inlet, centrifugal type with each fan in a separate scroll. Fans and shafts shall be dynamically balanced prior to installation into air handling unit, then the entire fan assembly shall be statically and dynamically balanced at the factory after it has been installed in the air handling unit. Fans shall be mounted on steel shafts accurately ground and finished. Fan bearings shall be sealed against dust and dirt and shall be precision self-aligning ball or roller type. Bearing life shall be L50 rated at not less than 200,000 hours as defined by ABEMA Std 9 and ABEMA Std 11. Bearings shall be permanently lubricated or lubricated type with lubrication fittings readily accessible at the drive side of the unit. Bearings shall be supported by structural shapes, or die formed sheet structural members, or support plates securely attached to the unit casing. Bearings may not be fastened directly to the unit sheet metal casing. Fans and scrolls shall be furnished with zinc chromate primer and an enamel finish coat. Fans shall be driven by a unit-mounted or a floor-mounted motor connected to fans by V-belt drive complete with belt guard for externally mounted motors. Belt guards shall be the three sided enclosed type with solid or expanded metal face. Belt drives shall be designed for not less than a 1.3 service factor based on motor nameplate rating. Motor sheaves shall be variable pitch for 20 kW and below and fixed pitch above 20 kW as defined by ARI Guideline D. Where fixed sheaves are required, variable pitch sheaves may be used during air balance, but shall be replaced with an appropriate fixed sheave after air

balance is completed. Variable pitch sheaves shall be selected to drive the fan at a speed that will produce the specified capacity when set at the approximate midpoint of the sheave adjustment. Motors for V-belt drives shall be provided with adjustable bases. Fan motors shall have splashproof enclosures. Motor starters shall be magnetic across-the-line type with general-purpose enclosure. Unit fan or fans shall be selected to produce the required capacity at the fan static pressure. Sound power level shall be as indicated. The sound power level values shall be obtained according to AMCA 300 or ASHRAE ANSI/ASHRAE 68.

2.10.1.5 Access Sections and Filter/Mixing Boxes

Access sections shall be provided where indicated and shall be furnished with access doors as shown. Access sections and filter/mixing boxes shall be constructed in a manner identical to the remainder of the unit casing and shall be equipped with access doors. Mixing boxes shall be designed to minimize air stratification and to promote thorough mixing of the air streams.

2.10.1.6 Dampers

Dampers shall be as specified in paragraph CONTROLS.

2.10.2 Variable Frequency Controller

The variable speed motor controller shall convert utility power shown on the mechanical drawings plus 15 percent, minus 5 percent, three phase, 60 Hz (plus or minus 2 Hz) to adjustable voltage/frequency, three phase, ac power for stepless motor control form 5 percent to 105 percent of base speed.

2.10.2.1 Description

The variable speed drive shall produce an adjustable ac voltage/frequency output for complete motor speed control. The variable speed drive shall be automatically controlled by a grounded electronic control signal. The variable speed drive shall be self contained, totally enclosed in a NEMA MG 1, ventilated cabinet and capable of operation between 0 and 40 degrees C. The variable speed drive maximum output current rating shall be equal to or exceed the motor nameplate full load. The manufacturer shall advise the maximum recommended motor sine wave current for each controller rating. Variable speed drive multiple motor operation at same frequency/speed shall be possible as long as the sum of connected motor full load sine wave currents are less than or equal to the variable speed drive maximum continuous current rating. Variable speed drive shall be 95 percent efficient at 100 percent rated output power, 60 Hz.

2.10.2.2 Governing Requirements

Variable speed drives shall conform to the following requirements:

a. Variable speed drive shall comply with 47 CFR 15 regulation of RF1/EM1 emission limits for Class A computing devices. The FCC label of compliance shall be displayed on the variable speed drive.

b. The variable speed drive and options shall comply with the applicable requiremnts and the standards of the American National Standards Institute (ANSI).

c. Variable speed drive and option design and construction thereof shall comply with all applicable provisions of NFPA 70, Article 43D, Sections A-L.

2.10.2.3 Quality Assurance

To ensure quality the variable speed drive shall be subject to the following tests:

a. The integrated circuits shall undergo a 160-hour "burn-in" to test reliability. During the "burn-in" the temperature shall be cycled between 0 and 70.0 degrees C (32 and 158 degrees F).

b. The completed unit shall undergo a fully loaded 24-hour "burn-in".

c. The unit shall be subject to a series of in-plant quality controlled inspections before approval for shipment form manufacturer's facilities.

2.10.2.4 Service

The variable speed drive shall be supplied with the following:

a. One-year parts and labor warranty.

b. A troubleshooting guide to help the building operator determine what steps must be taken to correct any problem that may exist in the system.

2.10.2.5 Basic Features

The variable speed drive shall have the following basic features:

a. Hand/Off/Auto Operation.

b. Manual/Auto speed reference switch.

c. Minimum/maximum adjustable speeds.

d. Speed potentiometer.

e. Auto restart.

f. Linear timed acceleration and deceleration for soft starting/stopping.

g. 3-63 Hz controlled speed range. (Factory set at 15 Hz minimum).

h. Terminal connections for time clock control and smoke detectors.

i. Output frequency terminal for remote metering.

2.10.2.6 Protective Circuit and Features

The variable speed drive controller shall include the following protective circuits/features.

a. Current limits to 100 percent design by slowing down motor.

b. Instantaneous Electronic Trip - automatically shutdown motor if current exceed 120 percent of design or phase-to-phase output short circuit occurs.

c. The variable speed drive will restart automatically when input line returns to normal in the event of intermittent power outage or phase loss or overvoltage shutdown.

d. Input power protection shuts down the unit if the following faults occur; low input line voltage or loss of an input phase.

e. Insensitive to incoming power phase.

f. Fast acting current limiting input fuses, (Class J) rated with 200,000 interrupting amperes capability.

g. Isolated 115 volt control circuit and dedicated control transformer.

h. Line-to-line fault portection.

i. Line-to-ground short circuiting and accidental motor grounding protection.

j. Output thermal overload relay trip.

2.10.2.7 Adjustments

The variable speed drive has the following adjustments available via potentiometers located on the faceplate of a single, regulator printed circuit board.

a. Minimum speed: 0-75 percent.

b. Maximu speed: 100 percent.

2.11 TERMINAL UNITS

2.11.1 Room Fan-Coil Units

Base units shall include galvanized coil casing, coil assembly drain pan valve and piping package, air filter, fans, motor, fan drive, and motor switch, plus an enclosure for cabinet models and casing for concealed models. Leveling devices integral with the unit shall be provided for vertical type units. Sound power levels shall be as indicated. Sound power level data or values for these units shall be obtained according to test procedures based on ARI 350. Sound power values apply to units provided with factory fabricated cabinet enclosures and standard grilles. Values obtained for the standard cabinet models will be acceptable for concealed models without separate test provided there is no variation between models as to the coil configuration, blowers, motor speeds, or relative arrangement of parts. Automatic valves and controls shall be provided as specified in paragraph CONTROLS. Each unit shall be fastened securely to the building structure. Capacity of the units shall be as indicated. Room fan-coil units shall be certified as complying with ARI ANSI/ARI 440, and shall meet the requirements of UL 1995.

2.11.1.1 Enclosures

Enclosures shall be fabricated of not lighter than 1.3 mm (18 gauge) steel, reinforced and braced. Front panels of enclosures shall be removable and provided with 13 mm (1/2 inch) thick dual density fibrous glass insulation. The exposed side shall be high density, erosion-proof material suitable for use in air streams with velocities up to 23 m/s (4,500 fpm). Discharge grille shall be adjustable and shall be of such design as to properly distribute air throughout the conditioned space. Plastic discharge and return grilles are acceptable provided the plastic material is certified by the manufacturer to be classified as flame resistant according to UL 94 and the material shall comply with the heat deflection criteria specified in UL 1995. Ferrous metal surfaces shall be galvanized or factory finished with corrosion resistant enamel. Access doors or removable panels shall be provided for piping and control compartments. Duct discharge collar shall be provided for concealed models. Enclosures shall have easy access for filter replacement.

2.11.1.2 Fans

Fans shall be galvanized steel or aluminum, multiblade, centrifugal type. In lieu of metal, fans and scrolls may be non-metallic materials of suitably reinforced compounds. Fans shall be dynamically and statically balanced. Surfaces shall be smooth. Assemblies shall be accessible for maintenance. Disassembly and re-assembly shall be by means of mechanical fastening devices and not by epoxies or cements.

2.11.1.3 Coils

Coils shall be constructed of not less than 10 mm (3/8 inch) outside diameter seamless copper tubing, with copper or aluminum fins mechanically bonded or soldered to the tubes. Coils shall be provided with not less than 12 mm (1/2 inch) outside diameter flare or sweat connectors, accessory piping package with thermal connections suitable for connection to the type of control valve supplied, and manual air vent. Coils shall be tested hydrostatically at 2000 kPa (300 psi) or under water at 1700 kPa (250 psi) air pressure and suitable for 1400 kPa (200 psi) working pressure. Provisions shall be made for coil removal.

2.11.1.4 Drain Pans

Drain and drip pans shall be sized and located to collect all water condensed on and dripping from any item within the unit enclosure or casing. Drain pans shall be constructed of not lighter than 0.9 mm (21 gauge) steel, galvanized after fabrication, thermally insulated to prevent condensation. Insulation shall have a flame spread rating not over 25 without evidence of continued progressive combustion, a smoke developed rating no higher than 50, and shall be of a waterproof type or coated with a waterproofing material. In lieu of the above, drain pans may be constructed of die-formed 0.85 mm (22 gauge) steel, formed from a single sheet, galvanized after fabrication, insulated and coated as specified for the 0.9 mm (21 gauge) material or of die-formed 0.9 mm (21 gauge) type 304 stainless steel, insulated as specified above. Drain pans shall be pitched to drain. Minimum 20 mm (3/4 inch) NPT or 15 mm (5/8 inch) OD drain connection shall be provided in drain pan. Auxiliary drain pans to catch drips from control and piping packages, eliminating insulation of the packages, may be plastic; if metal, the auxiliary pans shall comply with the requirements specified above. Insulation at control and piping connections thereto shall extend 25 mm minimum over the auxiliary drain

pan.

2.11.1.5 Manually Operated Outside Air Dampers

Manually operated outside air dampers shall be provided according to the arrangement indicated. Dampers shall be parallel airfoil type and of galvanized construction. Blades shall rotate on stainless steel or nylon sleeve bearings.

2.11.1.6 Filters

Filters shall be of the fiberglass disposable type, 25 mm (1 inch) thick, conforming to CID A-A-1419. Filters in each unit shall be removable without the use of tools.

2.11.1.7 Motors

Motors shall be of the permanent split-capacitor type with built-in thermal overload protection, directly connected to unit fans. Motor switch shall be two or three speeds and off, manually operated, and shall be mounted on an identified plate adjacent to the room thermostat or as indicated. In lieu of the above fan speed control, a solid-state variable-speed controller having a minimum speed reduction of 50 percent may be provided. Motors shall have permanently-lubricated or oilable sleeve-type or combination ball and sleeve-type bearings with vibration isolating mountings suitable for continuous duty. Motor power consumption, shown in watts, at the fan operating speed selected to meet the specified capacity shall not exceed the following values:

Unit Capacity (L/s)	Maximum Power Consumption (Watts)
94	55
142	60
189	65
283	80
378	130
472	130
566	130

2.11.2 Variable Air Volume (VAV) Terminal Units

VAV terminal units shall be the type, size, and capacity shown and shall be mounted in the ceiling and shall be suitable for single duct system applications. Actuators and controls shall be as specified in paragraph CONTROLS. Unit enclosures shall be constructed of galvanized steel not lighter than 0.85 mm (22 gauge) or aluminum sheet not lighter than 1.3 mm (18 gauge). Single or multiple discharge outlets shall be provided as required. Units with flow limiters are not acceptable. Unit air volume shall be factory preset and readily field adjustable without special tools. A flow chart shall be attached to each unit. Acoustic performance of the terminal units shall be based upon units tested according to ARI 880. Sound power level shall be as indicated. Discharge sound power shall be shown for minimum and 250 Pa (1 inch water gauge) inlet static pressure. Acoustical lining shall be according to NFPA 90A.

2.11.2.1 Variable Volume, Single Duct

Variable volume, single duct, terminal units shall be provided with a calibrated air volume sensing device, air valve or damper, actuator, and

accessory relays. Units shall control air volume to within plus or minus 5 percent of each air set point volume as determined by the thermostat with variations in inlet pressures from 200 to 1500 Pa (3/4 to 6 inch water gauge). Internal resistance of units shall not exceed 100 Pa (0.4 inch water gauge) at maximum flow range. External differential pressure taps separate from the control pressure taps shall be provided for air flow measurement with a 0 to 250 Pa (0 to 1 inch water gauge) range. Unit volume controller shall be normally closed upon loss of electricity.

2.12 FACTORY PAINTING

Units which are not of galvanized construction according to ASTM A 123 or ASTM A 924/A 924M shall be factory painted with a corrosion resisting paint finish. Internal and external ferrous metal surfaces shall be cleaned, phosphatized and coated with a paint finish which has been tested according to ASTM B 117, ASTM D 1654, and ASTM D 3359. Evidence of satisfactory paint performance for a minimum of 125 hours for units to be installed indoors and 500 hours for units to be installed outdoors shall be submitted. Rating of failure at the scribe mark shall be not less than 6, average creepage not greater than 3 mm. Rating of the inscribed area shall not be less than 10, no failure. On units constructed of galvanized steel which have been welded, exterior surfaces of welds or welds that have burned through from the interior shall receive a final shop docket of zinc-rich protective paint according to ASTM D 520 Type I.

2.13 REFRIGERANT LEAK DETECTOR

A refrigerant leak detection shall be provided in the mechanical room which houses a liquid chiller. The detector shall be located where refrigerant is likely to concentrate. The detector shall be a Halogen-specific detector which shall be specifically designed for area monitoring. The detector shall have an adjustable sensitivity such that it can detect refrigerant at or above 3 ppm. The detector shall energize the local mechanical ventilation system and initiate an audible and visible alarm upon detecting a refrigerant level greater than 10 ppm. The detector shall be capable of sensing two different types of refrigerant.

2.13.1 Refrigerant Monitor Performance

2.13.1.1 Refrigerant Monitor

Refrigerant monitor shall be capable of detecting concentration of 3 ppm for low-level leak detection and for insuring the safety of operations. It shall be supplied factory-calibrated for the appropriate refrigerant.

2.13.1.2 Monitors

All monitors shall be capable of continuously monitoring the mechanical room for the refrigerant used in the system. Monitor design and construction shall be compatible with temperature humidity, barometric pressure and voltage fluctuations of the mechanical room operating environment.

2.13.1.3 Refrigerant Monitor

The refrigerant monitor shall provide an alarm relay output which energizes when the monitor detects a refrigerant level at or above the TLV-TWA (Threshold Limit Value - Time Weighed Average) or toxicity measurement consistent therewith. This relay shall be used to initiate the following

events:

a. Energize an alarm consistent with other warning devices in the building to signal machinery room occupants.

b. Energize a light on or near the monitoring device; a second light, outside the mechanical room entrance, shall be used to provide an additional warning.

c. Energize the exhaust for required to achieve the maximum rate of exhaust. Exhaust fan shall remain energized until manually deactivated by an operator.

PART 3 EXECUTION

3.1 INSTALLATION

Work shall be installed as shown and according to the manufacturer's diagrams and recommendations.

3.1.1 Piping

Pipe and fitting installation shall conform to the requirements of ASME B31.1. Pipe shall be cut accurately to measurements established at the jobsite, and worked into place without springing or forcing, completely clearing all windows, doors, and other openings. Cutting or other weakening of the building structure to facilitate piping installation will not be permitted without written approval. Pipe or tubing shall be cut square, shall have burrs removed by reaming, and shall permit free expansion and contraction without causing damage to the building structure, pipe, joints, or hangers. Changes in direction shall be made with fittings, except that bending of pipe 100 mm (4 inches) and smaller will be permitted, provided a pipe bender is used and wide sweep bends are formed. The centerline radius of bends shall not be less than 6 diameters of the pipe. Bent pipe showing kinks, wrinkles, flattening, or other malformations will not be accepted. Horizontal supply mains shall pitch down in the direction of flow as indicated. The grade shall be not less than 2 mm in 1 m. Reducing fittings shall be used for changes in pipe sizes. Open ends of pipelines and equipment shall be capped or plugged during installation to keep dirt or other foreign materials out of the system. Pipe not otherwise specified shall be uncoated. Connections to appliances shall be made with malleable iron unions for steel pipe 65 mm (2-1/2 inches) or less in diameter, and with flanges for pipe 80 mm (3 inches) and larger. Connections between ferrous and copper piping shall be electrically isolated from each other with dielectric unions or flanges. All piping located in air plenums shall conform to NFPA 90Arequirements. Pipe and fittings installed in inaccessible conduits or trenches under concrete floor slabs shall be welded. Buried piping shall be installed per granular termite barrier manufacturer's recommendations.

3.1.1.1 Joints

a. Threaded Joints: Threaded joints shall be made with tapered threads and made tight with a stiff mixture of graphite and oil or polytetrafluoroethylene tape or equivalent thread joint compound or material, applied to the male threads only.

b. Soldered Joints: Joints in copper tubing shall be cut square with ends reamed, and all filings and dust wiped from interior of pipe.

Joints shall be soldered with 95/5 solder or brazed with silver solder applied and drawn through the full fitting length. Care shall be taken to prevent annealing of tube or fittings when making connections. Joints 65 mm (2-1/2 inches) and larger shall be made with heat uniformly around the entire circumference of the joint with a multi-flame torch. Connections in floor slabs shall be brazed. Excess solder shall be wiped from joint before solder hardens. Solder flux shall be liquid or paste form, non-corrosive and conform to ASTM B 813.

c. Welded Joints: Welding shall be according to qualified procedures using qualified welders and welding operators. Procedures and welders shall be qualified according to ASME BPV IX. Welding procedures qualified by others and welders and welding operators qualified by another operator may be permitted by ASME B31.1. Structural members shall be welded according to Section 05120 STRUCTURAL STEEL. All welds shall be permanently identified by imprinting the welder's or welding operator's assigned symbol adjacent to the weld. Welded joints shall be fusion welded unless otherwise required. Changes in direction of piping shall be made with welding fittings only; mitering or notching pipe to form elbows and tees or other similar type construction will not be permitted. Branch connections may be made with either welding tees or branch outlet fittings. Branch outlet fittings shall be forged, flared for improvement of flow where attached to the run, and reinforced against external strains. Beveling, alignment, heat treatment and inspection of weld shall conform to ASME B31.1. Weld defects shall be removed and repairs made to the weld, or the weld joints shall be entirely removed and rewelded. Electrodes shall be stored and dried according to AWS D1.1 or as recommended by the manufacturer. Electrodes that have been wetted or that have lost any of their coating shall not be used.

3.1.1.2 Flanges and Unions

Except where copper tubing is used, union or flanged joints shall be provided in each line immediately preceding the connection to each piece of equipment or material requiring maintenance such as coils, pumps, control valves, and other similar items.

3.1.2 Supports

3.1.2.1 General

Hangers used to support piping 50 mm (2 inches) and larger shall be fabricated to permit adequate adjustment after erection while still supporting the load. Pipe guides and anchors shall be installed to keep pipes in accurate alignment, to direct the expansion movement, and to prevent buckling, swaying, and undue strain. Piping subjected to vertical movement when operating temperatures exceed ambient temperatures shall be supported by variable spring hangers and supports or by constant support hangers.

3.1.2.2 Seismic Requirements (Pipe Supports and Structural Bracing)

Piping and attached valves shall be supported and braced to resist seismic loads as specified under Section 13080 SEISMIC PROTECTION FOR MECHANICAL, ELECTRICAL EQUIPMENT. Structural steel required for reinforcement to properly support piping, headers, and equipment but not shown shall be

provided under this section. Material used for support shall be as specified under Section 05210 STEEL JOISTS.

3.1.2.3 Pipe Hangers, Inserts and Supports

Pipe hangers, inserts, and supports shall conform to MSS SP-58 and MSS SP-69, except as modified herein. Types 5, 12, and 26 shall not be used.

a. Hangers: Type 3 shall not be used on insulated piping.

b. Inserts: Type 18 inserts shall be secured to concrete forms before concrete is placed. Continuous inserts which allow more adjustment may be used if they otherwise meet the requirements for Type 18 inserts.

c. C-Clamps: Type 19 and 23 C-clamps shall be torqued per MSS SP-69 and have both locknuts and retaining devices, furnished by the manufacturer. Field-fabricated C-clamp bodies or retaining devices are not acceptable.

d. Angle Attachments: Type 20 attachments used on angles and channels shall be furnished with an added malleable-iron heel plate or adapter.

e. Hangers: Type 24 may be used only on trapeze hanger systems or on fabricated frames.

f. Type 39 saddles shall be used on all insulated pipe 100 mm (4 inches) and larger when the temperature of the medium is above 15.5 degrees C. Type 39 saddles shall be welded to the pipe.

g. Type 40 shields shall:

(1) be used on all insulated pipes less than 100 mm (4 inches).

(2) be used on all insulated pipes 100 mm (4 inches) and larger when the temperature of the medium is 15.5 degrees C or less.

(3) have a high density insert for pipe 50 mm (2 inches) and larger, and for smaller pipe when the insulation shows signs of being visibly compressed, or when the insulation or jacket shows visible signs of distortion at or near the type 40 shield. High density inserts shall have a density of 144 kg/cubic meter (9 pcf) or greater.

h. Horizontal Pipe Supports: Horizontal pipe supports shall be spaced as specified in MSS SP-69 and a support shall be installed not over 300 mm (1 foot) from the pipe fitting joint at each change in direction of the piping. Pipe supports shall be spaced not over 1.5 m apart at valves. Pipe hanger loads suspended from steel joist with hanger loads between panel points in excess of 220 N (50 pounds) shall have the excess hanger loads suspended from panel points.

i. Vertical Pipe Supports: Vertical pipe shall be supported at each floor, except at slab-on-grade, and at intervals of not more than 5 m, not more than 2.4 m from end of risers, and at vent terminations.

j. Pipe Guides: Type 35 guides using steel reinforced polytetrafluoroethylene (PTFE) or graphite slides shall be provided where required to allow longitudinal pipe movement. Lateral restraints shall be provided as required. Slide materials shall be suitable for the system operating temperatures, atmospheric conditions, and bearing loads encountered.

k. Steel Slides: Where steel slides do not require provisions for restraint of lateral movement, an alternate guide method may be used. On piping 100 mm (4 inches) and larger with medium 15.5 degrees C or greater, a Type 39 saddle may be welded to the pipe and freely rest on a steel plate. On piping under 100 mm (4 inches), a Type 40 protection shield may be attached to the pipe or insulation and freely rest on a steel slide plate.

l. High Temperature Guides with Cradles: Where there are high system temperatures and welding to piping is not desirable, the Type 35 guide shall include a pipe cradle, welded to the guide structure and strapped securely to the pipe. The pipe shall be separated from the slide material by at least 100 mm, or by an amount adequate for the insulation, whichever is greater.

m. Insulated Pipe: Insulation on horizontal pipe shall be continuous through hangers for hot and cold piping. Other requirements on insulated pipe are specified in Section 15080 THERMAL INSULATION FOR MECHANICAL SYSTEMS.

3.1.3 Anchors

Anchors shall be provided wherever necessary or indicated to localize expansion or to prevent undue strain on piping. Anchors shall consist of heavy steel collars with lugs and bolts for clamping and attaching anchor braces, unless otherwise indicated. Anchor braces shall be installed in the most effective manner to secure the desired results using turnbuckles where required. Supports, anchors, or stays shall not be attached where they will injure the structure or adjacent construction during installation or by the weight of expansion of the pipeline.

3.1.4 Pipe Sleeves

Sleeves shall not be installed in structural members except where indicated or approved. Rectangular and square openings shall be as detailed. Each sleeve shall extend through its respective wall, floor, or roof, and shall be cut flush with each surface. Pipes passing through concrete or masonry wall or concrete floors or roofs shall be provided with pipe sleeves fitted into place at the time of construction. Unless otherwise indicated, sleeves shall provide a minimum of 6 mm all-around clearance between bare pipe and sleeves or between jacket over insulation and sleeves. Sleeves in bearing walls, waterproofing membrane floors, and wet areas shall be steel pipe or cast iron pipe. Sleeves in non-bearing walls, floors, or ceilings may be steel pipe, cast iron pipe, galvanized sheet metal with lock-type longitudinal seam and of the metal thickness indicated, or moisture resistant fiber or plastic. Except in pipe chases or interior walls, the annular space between pipe and sleeve or between jacket over insulation and sleeve, in non-fire rated walls, shall be sealed as indicated and specified in Section 07900 JOINT SEALING. Pipes passing through wall waterproofing membrane shall be sleeved as specified above, and a waterproofing clamping flange shall be installed as indicated.

3.1.4.1 Roof and Floor Sleeves

Pipes passing through roof or floor waterproofing membrane shall be installed through a 17-ounce copper sleeve within an integral skirt or flange. Flashing sleeve shall be suitably formed, and skirt or flange shall extend not less than 200 mm from the pipe and shall be set over the roof or floor membrane in a troweled coating of bituminous cement. Unless otherwise shown, the flashing sleeve shall extend up the pipe a minimum of 50 mm above highest floor level or a minimum of 250 mm above the roof. The annular space between the flashing sleeve and the bare pipe or between the flashing sleeve and the metal-jacket-covered insulation shall be sealed as indicated. Pipes up to and including 250 mm (10 inches) in diameter passing through roof or floor waterproofing membrane may be installed through a cast iron sleeve with caulking recess, anchor lugs, flashing clamp device, and pressure ring with brass bolts. Waterproofing membrane shall be clamped into place and sealant shall be placed in the caulking recess. In lieu of a waterproofing clamping flange and caulking and sealing of annular space between pipe and sleeve or conduit and sleeve, a modular mechanical type sealing assembly may be installed. Seals shall consist of interlocking synthetic rubber links shaped to continuously fill the annular space between the pipe/conduit and sleeve with corrosion protected carbon steel bolts, nuts, and pressure plates. Links shall be loosely assembled with bolts to form a continuous rubber belt around the pipe with a pressure plate under each bolt head and each nut. After the seal assembly is properly positioned in the sleeve, tightening of the bolt shall cause the rubber sealing elements to expand and provide a watertight seal between the pipe/conduit and the sleeve. Each seal assembly shall be sized as recommended by the manufacturer to fit the pipe/conduit and sleeve involved.

3.1.4.2 Fire Seal

Where pipes pass through firewalls, fire partitions, or floors, a fire seal shall be provided as specified in Section 07840 FIRESTOPPING.

3.1.4.3 Escutcheons

Escutcheons shall be provided at finished surfaces where exposed piping, bare or insulated, passes through floors, walls, or ceilings except in boiler, utility, or equipment rooms. Where sleeves project slightly from floors, special deep-type escutcheons shall be used. Escutcheons shall be secured to pipe or pipe covering.

3.1.5 Condensate Drain Lines

Water seals shall be provided in the condensate drain from all units. The depth of each seal shall be 50 mm plus 0.1 mm for each Pa, of the total static pressure rating of the unit to which the drain is connected. Water seals shall be constructed of 2 tees and an appropriate U-bend with the open end of each tee plugged. Pipe cap or plug cleanouts shall be provided where indicated. Drains indicated to connect to the sanitary waste system shall be connected by an indirect waste fitting. Air conditioner drain lines shall be insulated as specified in Section 15080 THERMAL INSULATION FOR MECHANICAL SYSTEMS.

3.1.6 Pipe-Alignment Guides

Pipe-alignment guides shall be provided where indicated for expansion loops, offsets, and bends and as recommended by the manufacturer for

expansion joints, not to exceed 1.5 m on each side of each expansion joint, and in lines 100 mm (4 inches) or smaller not more than 600 mm on each side of the joint.

3.1.7 Air Vents and Drains

3.1.7.1 Vents

Air vents shall be provided at high points, on water coils, and where indicated to ensure adequate venting of the piping system.

3.1.7.2 Drains

Drains shall be provided at low points and where indicated to ensure complete drainage of the piping. Drains shall be accessible, and shall consist of nipples and caps or plugged tees unless otherwise indicated.

3.1.8 Valves

Isolation gate or ball valves shall be installed on each side of each piece of equipment such as pumps, heaters, heating or cooling coils, and other similar items, at the midpoint of all looped mains, and at any other points indicated or required for draining, isolating, or sectionalizing purposes. Isolation valves may be omitted where balancing cocks are installed to provide both balancing and isolation functions. Each valve except check valves shall be identified. Valves in horizontal lines shall be installed with stems horizontal or above.

3.1.9 Equipment and Installation

Frames and supports shall be provided for tanks, pumps, valves, air handling units, fans, coils, dampers, and other similar items requiring supports. Air handling units shall be floor mounted. The method of anchoring and fastening shall be as detailed. Floor-mounted equipment, unless otherwise indicated, shall be set on not less than 150 mm (6 inch) concrete pads or curbs doweled in place. Concrete foundations for circulating pumps shall be heavy enough to minimize the intensity of the vibrations transmitted to the piping and the surrounding structure, as recommended in writing by the pump manufacturer. In lieu of a concrete pad foundation, a concrete pedestal block with isolators placed between the pedestal block and the floor may be provided. The concrete foundation or concrete pedestal block shall be of a mass not less than three times the weight of the components to be supported. Lines connected to the pump mounted on pedestal blocks shall be provided with flexible connectors. Foundation drawings, bolt-setting information, and foundation bolts shall be furnished prior to concrete foundation construction for all equipment indicated or required to have concrete foundations. Concrete for foundations shall be as specified in Section 03300 CAST-IN-PLACE STRUCTURAL CONCRETE.

3.1.10 Access Panels

Access panels shall be provided for concealed valves, vents, controls, dampers, and items requiring inspection or maintenance. Access panels shall be of sufficient size and located so that the concealed items may be serviced and maintained or completely removed and replaced. Access panels shall be as specified in Section 05500 MISCELLANEOUS METALS.

3.1.11 Flexible Connectors

Pre-insulated flexible connectors and flexible duct shall be attached to other components in accordance with the latest printed instructions of the manufacturer to ensure a vapor tight joint. Hangers, when required to suspend the connectors, shall be of the type recommended by the connector or duct manufacturer and shall be provided at the intervals recommended.

3.1.12 Sleeved and Framed Openings

Space between the sleeved or framed opening and the duct or the duct insulation shall be packed as specified in Section 07840 FIRESTOPPING for fire rated penetrations. For non-fire rated penetrations, the space shall be packed as specified in Section 07900 JOINT SEALING.

3.1.13 Metal Ductwork

Installation shall be according to SMACNA-06 unless otherwise indicated. Duct supports for sheet metal ductwork shall be according to SMACNA-06, unless otherwise specified. Friction beam clamps indicated in SMACNA-06 shall not be used. Risers on high velocity ducts shall be anchored in the center of the vertical run to allow ends of riser to move due to thermal expansion. Supports on the risers shall allow free vertical movement of the duct. Supports shall be attached only to structural framing members and concrete slabs. Supports shall not be anchored to metal decking unless a means is provided and approved for preventing the anchor from puncturing the metal decking. Where supports are required between structural framing members, suitable intermediate metal framing shall be provided. Where C-clamps are used, retainer clips shall be provided.

3.1.14 Kitchen Exhaust Ductwork

3.1.14.1 Ducts Conveying Smoke and Grease Laden Vapors

Ducts conveying smoke and grease laden vapors shall conform to requirements of NFPA 96. Seams, joints, penetrations, and duct-to-hood collar connections shall have a liquid tight continuous external weld. Duct material shall be minimum 1.3 mm (18 gauge), Type 304L or 316L, stainless steel. Duct construction shall include external perimeter angle sized in accordance with SMACNA-06, except welded joint reinforcement shall be on maximum of 600 mm centers; continuously welded companion angle bolted flanged joints with flexible ceramic cloth gaskets where indicated; pitched to drain at low points; welded pipe coupling-plug drains at low points; welded fire protection and detergent cleaning penetration; steel framed, stud bolted, and flexible ceramic cloth gasketed cleaning access provisions where indicated. Angles, pipe couplings, frames, bolts, etc., shall be same material as that specified for the duct unless indicated otherwise.

3.1.14.2 Exposed Ductwork

Exposed ductwork shall be fabricated from minimum 1.3 mm (18 gauge), Type 304L or 316L, stainless steel with continuously welded joints and seams. Ducts shall be pitched to drain at hoods and low points indicated. Surface finish shall match hoods.

3.1.14.3 Concealed Ducts Conveying Moisture Laden Air

Concealed ducts conveying moisture laden air shall be fabricated from minimum 1.3 mm (18 gauge), Type 300 series, stainless steel. Joints shall be continuously welded, brazed, or soldered to be liquid tight. Duct shall

be pitched to drain at points indicated. Transitions to other metals shall be liquid tight, companion angle bolted and gasketed.

3.1.14.4 Kitchen Hood

Kitchen hoods shall be as specified in Section 11400, FOOD SERVICE EQUIPMENT.

3.1.15 Dust Control

To prevent the accumulation of dust, debris and foreign material during construction, temporary dust control protection shall be provided. The distribution system (supply and return) shall be protected with temporary seal-offs at all inlets and outlets at the end of each day's work. Temporary protection shall remain in place until system is ready for startup.

3.1.16 Insulation

Thickness and application of insulation materials for ductwork, piping, and equipment shall be according to Section 15080 THERMAL INSULATION FOR MECHANICAL SYSTEMS. Outdoor air intake ducts and plenums shall be externally insulated up to the point where the outdoor air reaches the conditioning unit.

3.1.17 Duct Test Holes

Holes with closures or threaded holes with plugs shall be provided in the main supply and return ducts of the air handling units for the use of pitot tube in balancing the air system. Extensions, complete with cap or plug, shall be provided where the ducts are insulated.

3.1.18 Power Roof Ventilator Mounting

Foamed 13 mm (1/2 inch) thick, closed-cell, flexible elastomer insulation shall cover width of roof curb mounting flange. Where wood nailers are used, holes shall be pre-drilled for fasteners.

3.1.19 Power Transmission Components Adjustment

V-belts and sheaves shall be tested for proper alignment and tension prior to operation and after 72 hours of operation at final speed. Belts on drive side shall be uniformly loaded, not bouncing. Alignment of direct driven couplings shall be to within 50 percent of manufacturer's maximum allowable range of misalignment.

3.2 FIELD PAINTING AND PIPING IDENTIFICATION

Finish painting of items only primed at the factory or surfaces not specifically noted otherwise and identification for piping are specified in Section 09900 PAINTING, GENERAL.

3.3 PIPING HYDROSTATIC TEST

After cleaning, water piping shall be hydrostatically tested at a pressure equal to 689 kPa (100 psi) for period of time sufficient to inspect every joint in the system and in no case less than 2 hours. Leaks shall be repaired and piping retested until test is successful. No loss of pressure will be allowed. Leaks shall be repaired by re-welding or replacing pipe

or fittings. Caulking of joints will not be permitted. Concealed and insulated piping shall be tested in place before covering or concealing.

3.4 DUCTWORK LEAK TEST

Ductwork leak test shall be performed for the entire air distribution and exhaust system, including fans, coils, filters, etc. Test procedure, apparatus, and report shall conform to SMACNA-10. The maximum allowable leakage rate is 5 percent of total airflow. Ductwork leak test shall be completed with satisfactory results prior to applying insulation to ductwork exterior.

3.5 CLEANING AND ADJUSTING

Pipes shall be cleaned free of scale and thoroughly flushed of foreign matter. A temporary bypass shall be provided for water coils to prevent flushing water from passing through coils. Strainers and valves shall be thoroughly cleaned. Prior to testing and balancing, air shall be removed from water systems by operating the air vents. Temporary measures, such as piping the overflow from vents to a collecting vessel shall be taken to avoid water damage during the venting process. Air vents shall be plugged or capped after the system has been vented. Inside of room fan-coil units ducts, plenums, and casing shall be thoroughly cleaned of debris and blown free of small particles of rubbish and dust and then shall be vacuum cleaned before installing outlet faces. Equipment shall be wiped clean, with traces of oil, dust, dirt, or paint spots removed. Temporary filters shall be provided prior to startup of all fans that are operated during construction, and new filters shall be installed after all construction dirt has been removed from the building, and the ducts, plenums, casings, and other items specified have been vacuum cleaned. System shall be maintained in this clean condition until final acceptance. Bearings shall be properly lubricated with oil or grease as recommended by the manufacturer. Belts shall be tightened to proper tension. Control valves and other miscellaneous equipment requiring adjustment shall be adjusted to setting indicated or directed. Fans shall be adjusted to the speed indicated by the manufacturer to meet specified conditions.

3.6 TESTING, ADJUSTING, AND BALANCING

Testing, adjusting, and balancing shall be as specified in Section 15990 TESTING, ADJUSTING AND BALANCING OF HVAC SYSTEMS. Testing, adjusting, and balancing shall begin only when the air supply and distribution, including controls, has been completed, with the exception of performance tests.

3.7 PERFORMANCE TESTS

After testing, adjusting, and balancing has been completed as specified, each system shall be tested as a whole to see that all items perform as integral parts of the system and temperatures and conditions are evenly controlled throughout the building. Corrections and adjustments shall be made as necessary to produce the conditions indicated or specified. Capacity tests and general operating tests shall be conducted by an experienced engineer. Tests shall cover a period of not less than 1 day for each system and shall demonstrate that the entire system is functioning according to the specifications. Coincidental chart recordings shall be made at points indicated on the drawings for the duration of the time period and shall record the temperature at space thermostats or space sensors, the humidity at space humidistats or space sensors and the ambient temperature and humidity in a shaded and weather protected area.

3.8 FIELD TRAINING

The Contractor shall conduct a training course for operating and maintenance personnel as designated by the Contracting Officer. Training shall be provided for a period of 16 hours of normal working time and shall start after the system is functionally complete but prior to the performance tests. The field instruction shall cover all of the items contained in the approved Operating and Maintenance Instructions.

-- End of Section --

SECTION TABLE OF CONTENTS

DIVISION 16 - ELECTRICAL

SECTION 16370

ELECTRICAL DISTRIBUTION SYSTEM, AERIAL

PART 1 GENERAL

1.1 REFERENCES
1.2 GENERAL REQUIREMENTS
1.3 SUBMITTALS
1.4 DELIVERY, STORAGE, AND HANDLING

PART 2 PRODUCTS

2.1 GENERAL REQUIREMENTS
2.2 STANDARD PRODUCT
2.3 CORROSION PROTECTION
2.3.1 Aluminum Materials
2.3.2 Ferrous Metal Materials
2.3.2.1 Hardware
2.3.2.2 Equipment
2.3.3 Finishing
2.4 POLES AND HARDWARE
2.4.1 Wood Poles
2.4.2 Pole Line Hardware
2.5 GROUNDING AND BONDING
2.5.1 Driven Ground Rods
2.5.2 Grounding Conductors

PART 3 EXECUTION

3.1 GENERAL INSTALLATION REQUIREMENTS
3.1.1 Conformance to Codes
3.1.2 Verification of Dimensions
3.1.3 Tree Trimming
3.1.4 Disposal of Liquid Dielectrics
3.2 POLE INSTALLATION
3.2.1 Wood Pole Setting
3.3 GROUNDING
3.3.1 Grounding Electrodes
3.3.2 Grounding and Bonding Connections
3.3.3 Grounding Electrode Conductors
3.4 FIELD TESTING
3.4.1 General
3.4.2 Safety
3.4.3 Ground-Resistance Tests
3.5 ACCEPTANCE

-- End of Section Table of Contents --

SECTION 16370

ELECTRICAL DISTRIBUTION SYSTEM, AERIAL

PART 1 GENERAL

1.1 REFERENCES

The publications listed below form a part of this specification to the extent referenced. The publications are referred to in the text by basic designation only.

AMERICAN NATIONAL STANDARDS INSTITUTE (ANSI)

ANSI C135.1	(1979) Galvanized Steel Bolts and Nuts for Overhead Line Construction
ANSI C135.2	(1987) Threaded Zinc-Coated Ferrous Strand-Eye Anchor Rods and Nuts for Overhead Line Construction
ANSI C135.4	(1987) Zinc-Coated Ferrous Eyebolts and Nuts for Overhead Line Construction
ANSI C135.14	(1979) Staples with Rolled or Slash Points for Overhead Line Construction
ANSI C135.22	(1988) Zinc-Coated Ferrous Pole-Top Insulator Pins with Lead Threads for Overhead Line Construction
ANSI O5.1	(1992) Specifications and Dimensions for Wood Poles

AMERICAN SOCIETY FOR TESTING AND MATERIALS (ASTM)

ASTM A 123/A 123M	(1997ael) Zinc (Hot-Dip Galvanized) Coatings on Iron and Steel Products
ASTM A 153/A 153M	(1998) Zinc Coating (Hot-Dip) on Iron and Steel Hardware
ASTM A 575	(1996) Steel Bars, Carbon, Merchant Quality, M-Grades
ASTM A 576	(1990b; R 1995) Steel Bars, Carbon, Hot-Wrought, Special Quality
ASTM B 8	(1999) Concentric-Lay-Stranded Copper Conductors, Hard, Medium-Hard, or Soft

ASTM B 117	(1997) Operating Salt Spray (Fog) Apparatus
ASTM D 1654	(1992) Evaluation of Painted or Coated Specimens Subjected to Corrosive Environments

AMERICAN WOOD-PRESERVERS' ASSOCIATION (AWPA)

AWPA C4	(1995) Poles - Preservative Treatment by Pressure Processes
AWPA P1/P13	(1995) Standard for Coal Tar Creosote for Land and Fresh Water and Marine (Coastal Water Use)
AWPA P5	(1997) Standards for Waterborne Preservatives
AWPA P8	(1997) Standards for Oil-Borne Preservatives
AWPA P9	(1997) Standards for Solvents for Organic Preservative Systems

INSTITUTE OF ELECTRICAL AND ELECTRONIC ENGINEERS (IEEE)

IEEE C2	(1997) National Electrical Safety Code
IEEE Std 81	(1983) Guide for Measuring Earth Resistivity, Ground Impedance, and Earth Surface Potentials of a Ground System (Part 1)

NATIONAL FIRE PROTECTION ASSOCIATION (NFPA)

NFPA 70	(1999) National Electrical Code

UNDERWRITERS LABORATORIES (UL)

UL 467	(1993; Rev thru Aug 1996) Grounding and Bonding Equipment

1.2 GENERAL REQUIREMENTS

1.3 SUBMITTALS

Government approval is required for submittals with a "GA" designation; submittals having an "FIO" designation are for information only. The following shall be submitted in accordance with Section 01330 SUBMITTAL PROCEDURES:

SD-04 Drawings

As-Built Drawings; FIO

The as-built drawings shall be a record of the construction as installed. The drawings shall include the information shown on the contract drawings as well as deviations, modifications, and changes from the contract drawings, however minor. The as-built drawings shall be kept at the job site and updated daily. The as-built drawings shall be a full sized set of prints marked to reflect deviations, modifications, and changes. The as-built drawings shall be complete and show the location, dimensions, part identification, and other information. Additional sheets may be added. The as-built drawings shall be jointly inspected for accuracy and completeness by the Contractor's quality control representative and by the Contracting Officer prior to the submission of each monthly pay estimate. Upon completion of the work, the Contractor shall submit three full sized sets of the marked prints to the Contracting Officer for approval. If upon review, the as-built drawings are found to contain errors and/or omissions, they will be returned to the Contractor for correction. The Contractor shall correct and return the as-built drawings to the Contracting Officer for approval within ten calendar days from the time the drawings are returned to the Contractor.

SD-01 Data

Material, Equipment, and Fixture Lists; FIO

A complete itemized listing of equipment and materials proposed for incorporation into the work. Each entry shall include the item number, the quantity of items proposed, and the name of the manufacturer of the item.

SD-09 Reports

Field Testing; FIO

A proposed field test plan 20 days prior to testing the installed system. No field test shall be performed until the test plan is approved. The test plan shall consist of complete field test procedures including tests to be performed, test equipment required, and tolerance limits.

SD-13 Certificates

Materials and Equipment; FIO

Where materials or equipment are specified to conform to the standards of the Underwriters Laboratories (UL) or to be constructed or tested, or both, in accordance with the standards of the American National Standards Institute (ANSI), the Institute of Electrical and Electronic Engineers (IEEE), or the National Electrical Manufacturers Association (NEMA), the Contractor shall submit proof that the items provided under this section of the specifications conform to such requirements. The label of, or listing by, UL will be acceptable as evidence that the items conform thereto. Either a certification or a published catalog specification data statement, to the effect that the item is in accordance with the referenced ANSI or IEEE standard, will be acceptable as evidence that the item conforms thereto. A similar certification or published catalog specification data statement to the effect that the item is in accordance with the referenced NEMA standard, by a company listed as a member company of NEMA, will be acceptable as evidence that the item conforms thereto. In lieu of such certification or published data, the Contractor may submit a certificate

from a recognized testing agency equipped and competent to perform such services, stating that the items have been tested and that they conform to the requirements listed, including methods of testing of the specified agencies.

1.4 DELIVERY, STORAGE, AND HANDLING

Devices and equipment shall be visually inspected by the Contractor when received and prior to acceptance from conveyance. Stored items shall be protected from the environment in accordance with the manufacturer's published instructions. Damaged items shall be replaced. Oil filled transformers and switches shall be stored in accordance with the manufacturer's requirements. Wood poles held in storage for more than 2 weeks shall be stored in accordance with ANSI O5.1. Handling of wood poles shall be in accordance with ANSI O5.1, except that pointed tools capable of producing indentations more than inch in depth shall not be used. Metal poles shall be handled and stored in accordance with the manufacturer's instructions.

PART 2 PRODUCTS

2.1 GENERAL REQUIREMENTS

Products shall conform to the following requirements. Items of the same classification shall be identical including equipment, assemblies, parts, and components.

2.2 STANDARD PRODUCT

Material and equipment shall be the standard product of a manufacturer regularly engaged in the manufacture of the product and shall essentially duplicate items that have been in satisfactory use for at least 2 years prior to bid opening.

2.3 CORROSION PROTECTION

2.3.1 Aluminum Materials

Aluminum shall not be used.

2.3.2 Ferrous Metal Materials

2.3.2.1 Hardware

Ferrous metal hardware shall be hot-dip galvanized in accordance with ASTM A 153/A 153M and ASTM A 123/A 123M.

2.3.2.2 Equipment

Equipment and component items, including but not limited to transformers and ferrous metal luminaires not hot-dip galvanized or porcelain enamel finished, shall be provided with corrosion-resistant finishes which shall withstand 480 hours of exposure to the salt spray test specified in ASTM B 117 without loss of paint or release of adhesion of the paint primer coat to the metal surface in excess of 1.6 mm (1/16 inch) from the test mark. The described test mark and test evaluation shall be in accordance with ASTM D 1654 with a rating of not less than 7 in accordance with TABLE 1, (procedure A). Cut edges or otherwise damaged surfaces of hot-dip galvanized sheet steel or mill galvanized sheet steel shall be coated with

a zinc rich paint conforming to the manufacturer's standard.

2.3.3 Finishing

Painting required for surfaces not otherwise specified and finish painting of items only primed at the factory shall be as specified in Section 09900 PAINTING, GENERAL.

2.4 POLES AND HARDWARE

Poles shall be of lengths and classes indicated.

2.4.1 Wood Poles

Wood poles shall comply with ANSI O5.1, and shall be pressure treated in accordance with AWPA C4, with creosote conforming to AWPA P1/P13or with oil-borne preservatives and petroleum conforming to AWPA P8 and AWPA P9, respectively, and waterborne preservatives conforming to AWPA P5. Waterborne preservatives shall be either chromated or ammoniacal copper arsenate. Any species listed in ANSI O5.1 for which a preservative treatment is not specified in AWPA C4, shall not be used; northern white cedar, if treated as specified for western red cedar, and western fir, if treated as specified for Douglas fir, may be used. Wood poles shall have pole markings located approximately 3 m from pole butts for poles 15.2 m (50 feet) or less in length, and 4 m from the pole butts for poles longer than 16.8 m (55 feet) in length. Poles shall be machine trimmed by turning smooth full length, and shall be roofed, gained, and bored prior to pressure treatment. Where poles are not provided with factory-cut gains, metal gain plates shall be provided.

2.4.2 Pole Line Hardware

Zinc-coated hardware shall comply with ANSI C135.1, ANSI C135.2, ANSI C135.4, ANSI C135.14 ANSI C135.22. Steel hardware shall comply with ASTM A 575 and ASTM A 576. Hardware shall be hot-dip galvanized in accordance with ASTM A 153/A 153M. Pole-line hardware shall be hot-dip galvanized steel. Washers shall be installed under boltheads and nuts on wood surfaces and elsewhere as required. Washers used on through-bolts and double-arming bolts shall be approximately 57.2 mm square and 4.8 mm (3/16 inch) thick. The diameter of holes in washers shall be the correct standard size for the bolt on which a washer is used. Washers for use under heads of carriage-bolts shall be of the proper size to fit over square shanks of bolts. Eye bolts, bolt eyes, eyenuts, strain-load plates, lag screws, guy clamps, fasteners, hooks, shims, and clevises shall be used wherever required to support and to protect poles.

2.5 GROUNDING AND BONDING

2.5.1 Driven Ground Rods

Ground rods shall be of copper-clad steel conforming to UL 467 not less than 19.1 mm (3/4 inch) in diameter by 3.1 meter (10 feet) in length of the sectional type driven full length into the earth.

2.5.2 Grounding Conductors

Grounding conductors shall be bare, except where installed in conduit with associated phase conductors. Insulated conductors shall be of the same material as the phase conductors and green color-coded, except that

conductors shall be rated no more than 600 volts. Bare conductors shall be ASTM B 8 soft-drawn unless otherwise indicated. Aluminum is not acceptable.

PART 3 EXECUTION

3.1 GENERAL INSTALLATION REQUIREMENTS

Equipment and devices shall be installed and energized in accordance with the manufacturer's published instructions. Circuits installed in conduits or underground and splices and terminations for medium-voltage cable shall conform to the requirements of Section 16375 ELECTRICAL DISTRIBUTION SYSTEM, UNDERGROUND. Secondary circuits installed in conduit on poles shall conform to the requirements of Section 16415 ELECTRICAL WORK, INTERIOR.

3.1.1 Conformance to Codes

The installation shall comply with the requirements and recommendations of IEEE C2 for heavy loading districts, Grade B construction. No reduction in clearance shall be made. The installation shall also comply with the applicable parts of NFPA 70.

3.1.2 Verification of Dimensions

The Contractor shall become familiar with details of the work, shall verify dimensions in the field, and shall notify the Contracting Officer of any discrepancy before performing any work.

3.1.3 Tree Trimming

Where lines pass through trees, trees shall be trimmed at least 4.5 m clear on both sides horizontally and below for medium-voltage lines, and 1.5 m clear on both sides horizontally and below for other lines, and no branch shall overhang horizontal clearances. Where trees are indicated to be removed to provide a clear right-of-way, clearing is specified in Section 02230 CLEARING AND GRUBBING.

3.1.4 Disposal of Liquid Dielectrics

PCB-contaminated dielectric shall be marked as PCB and transported to and incinerated by an approved EPA waste disposal facility. The Contractor shall furnish certification of proper disposal. Contaminated dielectric shall not be diluted to lower the level of contamination.

3.2 POLE INSTALLATION

Communication lines shall be wood poles.

3.2.1 Wood Pole Setting

Wood Pole Setting: Wood poles shall be set straight and firm. In normal firm ground, minimum pole-setting depths shall be as listed in Table II. In rocky or swampy ground, pole-setting depths shall be decreased or increased respectively in accordance with the Directorate of Public Works published standards and as approved. In swampy or soft ground, a bog shoe shall be used where support for a pole is required. Poles in straight runs shall be in a straight line. Curved poles shall be placed with curvatures in the direction of the pole line. Poles shall be set to maintain as even a grade as practicable. When the average ground run is level, consecutive

poles shall not vary more than 1.5 m in height. When the ground is uneven, poles differing in length shall be kept to a minimum by locating poles to avoid the highest and lowest ground points. If it becomes necessary to shorten a pole, a piece shall be sawed off the top end and roofed. If any pole is shortened after treatment, the shortened end of the pole shall be given an application of hot preservative. Where poles are set on hilly terrain, along edges of cuts or embankments, or where soil may be washed out, special precautions shall be taken to ensure durable pole foundations, and the setting depth shall be measured from the lower side of the pole. Holes shall be dug large enough to permit proper use of tampers to the full depth of a hole. Earth shall be placed into the hole in 300 mm maximum layers, then thoroughly tamped before the next layer is placed. Surplus earth shall be placed around each pole in a conical shape and packed tightly to drain water away from poles.

TABLE II

MINIMUM POLE-SETTING DEPTH (METERS)

Length Overall Meters	Straight Lines	Curves, Corners, and Points of Extra Strain
6.1	1.5	1.5
7.6	1.7	1.7
9.2	1.7	1.7
10.7	1.8	1.8
12.2	1.8	1.8
13.7	2.0	2.1
15.2	2.1	2.3
16.7	2.3	2.5
18.3	2.5	2.6
19.8	2.6	2.6
21.3	2.8	2.9
22.9	2.9	3.0
24.4	3.0	3.2
25.9	3.2	3.3
27.4	3.3	3.5
28.9	3.5	3.7
30.5	3.7	3.8

3.3 GROUNDING

All noncurrent-carrying metal items shall be grounded.

3.3.1 Grounding Electrodes

Grounding electrodes shall be installed as follows:

a. Driven rod electrodes - Ground rods shall be located approximately 900 mm out from base of the pole and shall be driven into the earth until the tops of the rods are approximately 300 mm below finished grade.

b. Ground Resistance - The maximum resistance of a driven ground rod shall not exceed 25 ohms under normally dry conditions. Whenever the required ground resistance is not met, provide additional electrodes interconnected with grounding conductors, to achieve

the specified ground resistance. The additional electrodes will be up to three, 3 m (10 feet) rods spaced a minimum of 3 m (10 feet) apart. In high ground resistance, UL listed chemically charged ground rods may be used. If the resultant resistance exceeds 25 ohms measured not less than 48 hours after rainfall, the Contracting Officer shall be notifies immediately. Connections below grade shall be fusion welded. Connections above grade shall be fusion welded or shall use UL 467 approved connectors.

3.3.2 Grounding and Bonding Connections

Connections above grade shall be made by the fusion-welding process or with bolted solderless connectors in compliance with UL 467, and those below grade shall be made by a fusion-welding process. Where grounding conductors are connected to aluminum-composition conductors, specially treated or lined copper-to-aluminum connectors suitable for this purpose shall be used.

3.3.3 Grounding Electrode Conductors

Grounding electrode conductors shall be stapled to wood poles at intervals not exceeding 600 mm.

3.4 FIELD TESTING

3.4.1 General

Field testing shall be performed in the presence of the Contracting Officer. The Contractor shall notify the Contracting Officer 14 days prior to conducting tests. The Contractor shall furnish materials, labor, and equipment necessary to conduct field tests. The Contractor shall perform tests and inspections recommended by the manufacturer unless specifically waived by the Contracting Officer. The Contractor shall maintain a written record of tests which includes date, test performed, personnel involved, devices tested, serial number and name of test equipment, and test results. Field reports will be signed and dated by the Contractor.

3.4.2 Safety

The Contractor shall provide and use safety devices such as rubber gloves, protective barriers, and danger signs to protect and warn personnel in the test vicinity. The Contractor shall replace any devices or equipment which are damaged due to improper test procedures or handling.

3.4.3 Ground-Resistance Tests

The resistance of each pole ground shall be measured using the fall-of-potential method defined in IEEE Std 81. Ground resistance measurements shall be made before the electrical distribution system is energized and shall be made in normally dry conditions not less than 48 hours after the last rainfall. Resistance measurements of separate grounding electrode systems shall be made before the systems are bonded together below grade. The combined resistance of separate systems may be used to meet the required resistance, but the specified number of electrodes shall be provided.

3.5 ACCEPTANCE

Final acceptance of the facility will not be given until the Contractor has successfully completed all tests and after all defects in installation, material or operation have been corrected.

-- End of Section --

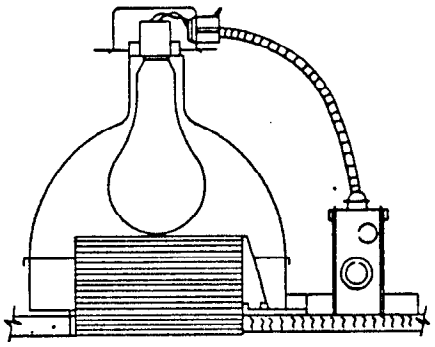

TYPE 116

Recessed Round Incandescent Downlight

Fixture shall conform to UL 1571. Fixture shall have thermal protection or shall be UL listed as suitable for use in direct contact with insulation. Fixture shall be rated for a 200 watt lamp. The mounting plate shall be steel. The reflector shall be highly polished aluminum. The baffle shall be black, constructed of aluminum, and multigrooved for low brightness. The baffle shall be securely attached to the fixture housing and shall be easily removed without the use of tools. Fixture shall be provided with a through wiring junction box and shall be prewired.

Fixture type indicated on this sheet shall also conform to requirements specified and indicated in the contract documents.

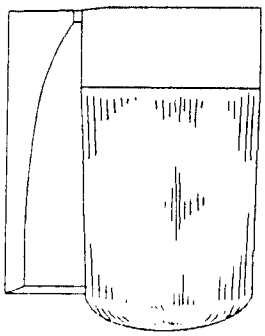

TYPE 124
Rated for One 100 Watt Lamp

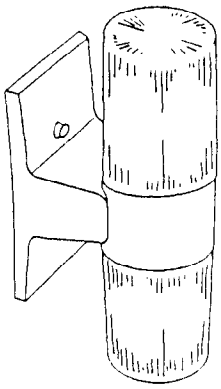

TYPE 125
Rated for Two 100 Watt Lamps

Exterior Wall Mounted Enclosed and Gasketed
Incandescent Fixtures For Wet Locations

Suffix	Description
A	Without protective guard
B	With protective guard

Fixture shall conform to UL 1571. Fixture shall be suitable for use in wet locations and shall be enclosed and gasketed. The round housing and wall bracket shall be cast aluminum provided with a brushed or satin aluminum finish and a clear acrylic lacquer protective coating. The lampholder shall be medium base glazed porcelain. The housing shall be threaded to receive the threaded globe. The globe shall be white opal tempered glass. The protective guard shall be cast aluminum and finished as specified for housing. Fixture shall be prewired.

Fixture types indicated on this sheet shall also conform to requirements specified and indicated in the contract documents.

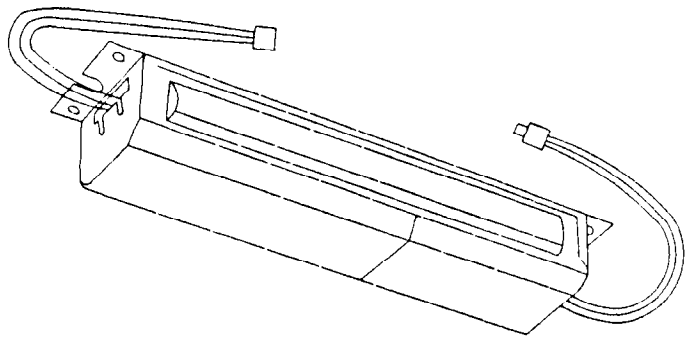

TYPE 200

Emergency Battery and Lamp Supply Unit for Fluorescent Fixtures

The unit shall conform to UL 924 and be UL Listed for field or factory installation. The unit shall be dual-rated for use on either 120 or 277 Volt lighting circuits, and shall meet or exceed NFPA 70 time and voltage requirements. The unit shall be capable of automatically supplying a minimum of 15 percent of the rated lumen output of a standard 4-foot, 40 watt rapid start fluorescent lamp in one minute following the failure of the normal power supply. It shall provide a minimum of 60 percent of the initial emergency illumination at the end of the 90-minute discharge period. The battery charger shall be capable of fully recharging the battery within 24 hours after the return of the normal power supply and, under normal operations, shall trickle charge the battery to maintain it in a fully charged condition. The unit shall be capable of operating at least one of the lamps in the fixture which also houses the unit and shall consist of a high temperature, pocket-plate type of nickel cadmium battery, charger, and electronic circuitry in one compact housing. A conveniently located test switch shall be provided to test the solid-state circuitry and the readiness of the battery. The battery shall be designed to require no maintenance during the expected life, be warranted for not less than three years from the date of the purchase of the unit, and be field replaceable without requiring removal of other components of the unit. Other components of the unit shall be fully warranted for not less than 18 months from the date of purchase of the unit.

The Emergency Battery and Lamp Supply Unit indicated on this sheet shall be provided as indicated on other sheets, and shall also conform to requirements specified or indicated in the contract documents.

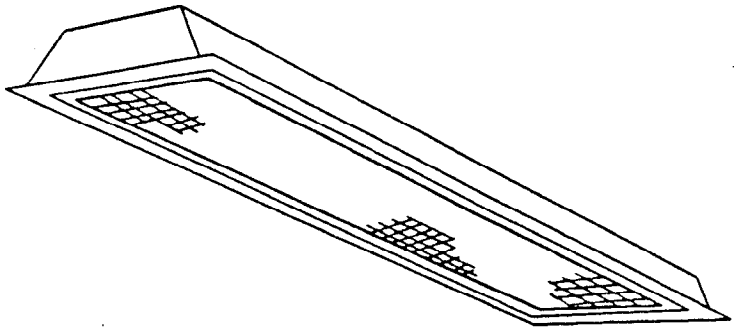

TYPE 204
Static Troffer

TYPE 205
Air Handling Troffer

Recessed Fluorescent Fixture, 1-foot by 4-foot

First Suffix	Second Suffix	Third Suffix	Description
A			Single lamp
B			Two lamp
	1		Prismatic acrylic lens
	2		1/2- by 1/2- by 1/2-inch acrylic cube louver
	3		1/2- by 1/2- by 1/2-inch polystyrene cube louver
		A	Type 200 emergency unit

Fixture shall conform to UL 1570. Housing shall be complete with integral side trim flanges. Housing and trim flanges shall be cold-rolled steel. The lens or louver shall be installed in a manner that will prevent it from coming loose due to vibration. The ballast and wiring shall be enclosed in a wireway that is continuous throughout the length of the fixture and which forms a wireway for circuits through the fixture. All metal parts shall receive a rust inhibitive coating before application of the finish coat. The finish coat shall be baked white enamel. Lenses and acrylic cube louvers shall be 100 percent virgin acrylic plastic. The lens or louver shall be four feet in length. Acrylic lens shall be flat, 0.125 inch nominal thickness, low brightness, with smooth top surface and a lower surface having a regular array of prismatic elements. Single-lamp ballast shall be used for individually mounted single-lamp fixtures and where single-lamp fixtures occur at the ends of continuous rows, except two-lamp ballasts shall be used for tandem mounted single-lamp fixtures. Standard ballast(s) shall be the Class P, high power factor type which has been approved for the application by the Certified Ballast Manufacturers. Fixture shall be prewired.

Fixture types indicated on this sheet shall also conform to requirements specified and indicated in the contract documents.

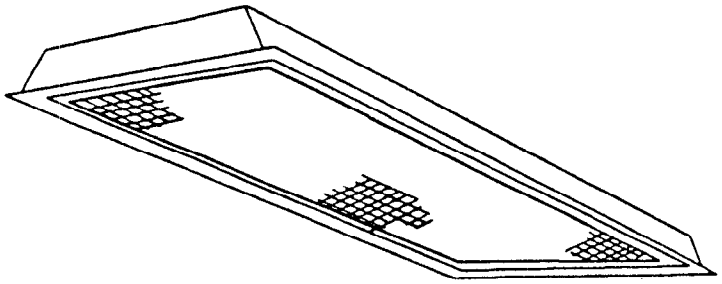

TYPE 206
Static Troffer

TYPE 207
Air Handling Troffer

Recessed Fluorescent Fixture, 2-foot by 4-foot

First Suffix	Second Suffix	Third Suffix	Description
A			Two lamps
B			Three lamps
C			Four lamps
	1		Prismatic acrylic lens
	2		1/2- by 1/2- by 1/2-inch cube louver
	3		1/2- by 1/2- by 1/2-inch polystyrene cube louver
		A	Type 200 emergency unit

Fixture shall conform to UL 1570. Housing shall be complete with integral side trim flanges. Housing and trim flanges shall be cold-rolled steel. The lens or louver shall be installed in a manner that will prevent it from coming loose due to vibration. The ballasts and wiring shall be enclosed in a wireway that is continuous throughout the length of the fixture and which forms a wireway for circuits through the fixture. All metal parts shall receive a rust inhibitive coating before application of the finish coat. The finish coat shall be baked enamel. Lenses and acrylic cube louvers shall be 100 percent virgin acrylic plastic. The lens or louver shall be four feet in length. Acrylic lens shall be flat, 0.125 inch nominal thickness, low brightness, with smooth top surface and a lower surface having a regular array of prismatic elements. Two-lamp ballasts shall be used for individually mounted two-lamp fixtures. Standard ballast(s) shall be the Class P, high power factor type which has been approved for the application by the Certified Ballast Manufacturers. Fixture shall be prewired.

Fixture types indicated on this sheet shall also conform to requirements specified and indicated in the contract documents.

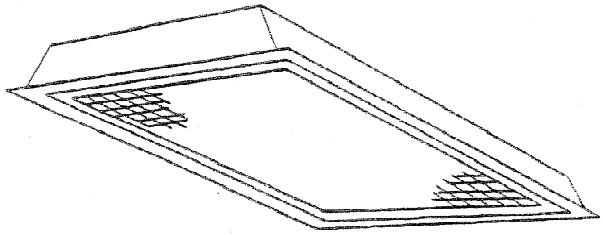

TYPE 208
Static Troffer

TYPE 209
Air Handling Troffer

Recessed Fluorescent Fixture, 4-foot by 4-foot

First Suffix	Second Suffix	Third Suffix	Description
A			Four lamps
B			Six lamps
	1		Prismatic acrylic lens
	2		1/2- by 1/2- by 1/2-inch cube louver
	3		1/2- by 1/2- by 1/2-inch polystyrene cube louver
		A	Type 200 emergency unit

Fixture shall conform to UL 1570. Housing shall be complete with integral side trim flanges. Housing and trim flanges shall be cold-rolled steel. The lens or louver shall be installed in a manner that will prevent it from coming loose due to vibration. The ballasts and wiring shall be enclosed in a wireway that is continuous throughout the length of the fixture and which forms a wireway for circuits through the fixture. All metal parts shall receive a rust inhibitive coating before application of the finish coat. The finish coat shall be virgin acrylic plastic. The lens or louver shall be four feet in length. Acrylic lens shall be flat, 0.125 inch nominal thickness, low brightness, with smooth top surface and a lower surface having a regular array of prismatic elements. Two-lamp ballasts shall be used for each pair of lamps. Standard ballast(s) shall be the Class P, high power factor type which has been approved for the application by the Certified Ballast Manufacturers. Fixture shall be prewired.

Fixture types indicated on this sheet shall also conform to requirements specified and indicated in the contract documents.

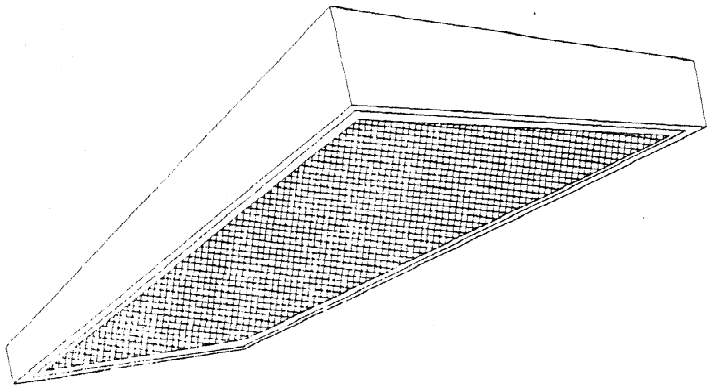

TYPE 214

Fluorescent Fixture, 2-foot by 4-foot

First Suffix	Second Suffix	Third Suffix	Description
A			Two lamps
B			Three lamps
C			Four lamps
	1		45x45 Light-Stabilized Polystyrene egg crate louver
	2		35x25 Parabolic Aluminized Louver
	3		Prismatic Acrylic Lens Flat 0.125 inch nominal thickness
		A	Type 200 emergency unit

Fixture shall conform to UL 1570. Housing shall be cold-rolled steel. The lens shall be installed in a manner that will prevent it from coming loose due to vibration. The ballasts and wiring shall be enclosed in a wireway that is continuous throughout the length of the fixture and which forms a wireway for circuits through the fixture. All metal parts shall receive a rust inhibitive coating before application of the finish coat. The finish coat shall be baked white enamel. Standard ballast(s) shall be the Class P, high power factor type which has been approved for the application by the Certified Ballast Manufacturers. Fixture shall be prewired.

Fixture type indicated on this sheet shall also conform to requirements specified and indicated in the contract documents.

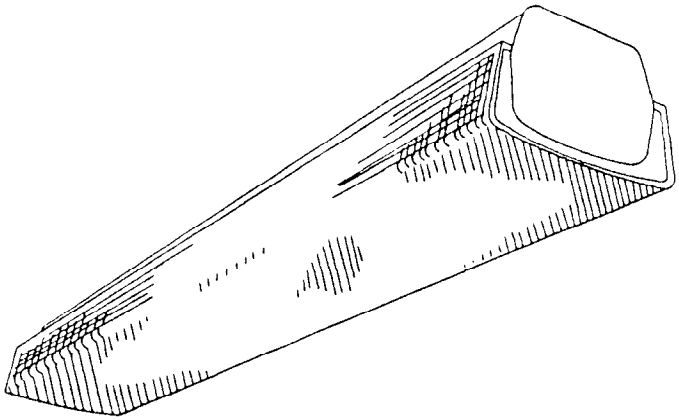

TYPE 218	TYPE 219
7-inch by 48-inch	7-inch by 96-inch
One Lamp	Two Lamps

Surface, Ceiling Mounted, Wraparound Fluorescent Fixture

Fixture shall be constructed of cold-rolled steel and shall conform to UL 1570. The fixture chassis shall be die-formed. Back housing shall be one piece, solid along its entire length, and shall have sufficient knockouts for conventional pendant and surface mounting. The lens shall be of 100 percent virgin acrylic plastic not less than 1/8-inch nominal thickness. The lens shall be easily removed without the use of tools and shall be held in place by concealed hinges and latches, by reinforcing ribs along the edges, or by resting in place on the end plate of the fixture. The lens and end caps or fittings shall fit so there is no light leakage. Removable white plastic or baked white enamel metal end fittings shall be provided on each end of each fixture to permit the installation of continuous rows of fixtures, the closure of ends of fixtures in a continuous row, and the closure of the ends of individually mounted fixtures. All metal parts shall receive a rust inhibitive coating and a white baked enamel finish. Type 218 fixture shall use a single-lamp ballast for individually mounted fixtures and where single-lamp fixtures occur at the ends of continuous rows. Two-lamp ballasts shall be provided for the Type 219 fixtures and for tandem mounted Type 218 fixtures. Type 219 fixture shall be provided with a 2-piece lens, each approximately 48 inches in length, and a light concealing center strap. Standard ballast(s) shall be the Class P, high power factor type which has been approved for the application by the Certified Ballast Manufacturers. Fixture shall be prewired.

Fixture types indicated on this sheet shall also conform to requirements specified and indicated in the contract documents.

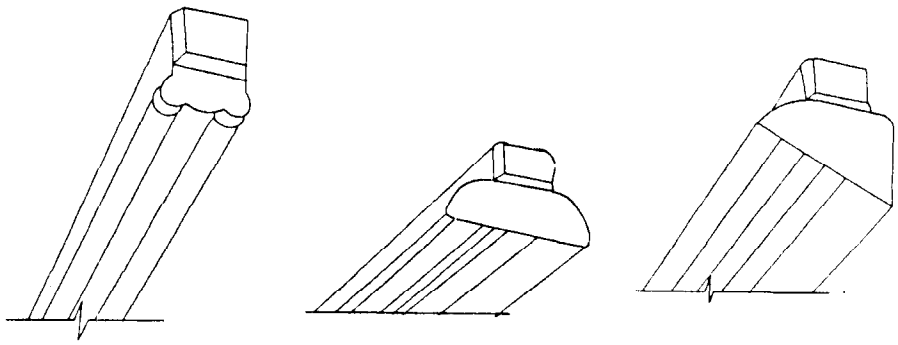

TYPE 220 Without Reflector	TYPE 221 With Symmetric Reflector	TYPE 222 With Asymmetric Reflector

Single- and Two-Lamp Fluorescent Strip Fixture

Suffix	Description
A	One lamp
B	Two lamps

Fixture shall be constructed of cold-rolled steel and shall conform to UL 1570. The fixture shall have a die-formed steel channel, suitable mounting holes, and 1/2-inch knockouts in back. Channel and end fittings shall have a baked white enamel finish. The channel and end fittings shall be removed to permit the installation of a continuous row of fixtures, the closure of fixtures at the ends of continuous rows, and the closure of the ends of individually mounted fixtures with no light leakage. Channel covers shall have threaded fittings for reflector mounting, shall be constructed of die-formed steel, and shall be finished with baked white enamel. All ferrous metal parts shall receive a rust inhibitive coating before application of finish coat. Reflectors shall be designed for direct attachment to the channel cover with suitable threaded fittings. Reflectors shall be manufacturer's standard commercial product and shall be constructed of die-formed aluminum with highly polished finish, or steel with white porcelain enamel finish, or steel with baked white enamel finish. Fixture shall be suitable for pendant and surface mounting. Standard ballast(s) shall be the Class P, high power factor type which has been approved for the application by the Certified Ballast Manufacturers. Fixture shall be prewired. Sockets shall be of the type requiring a forced movement along the longitudinal axis of the lamp for insertion and removal of the lamp. Fluoresent tubes shall be protected by a virgin acrylic protective sleeve and clear plastic vented end caps.

Fixture types indicated on this sheet shall also conform to requirements specified and indicated in the contract documents.

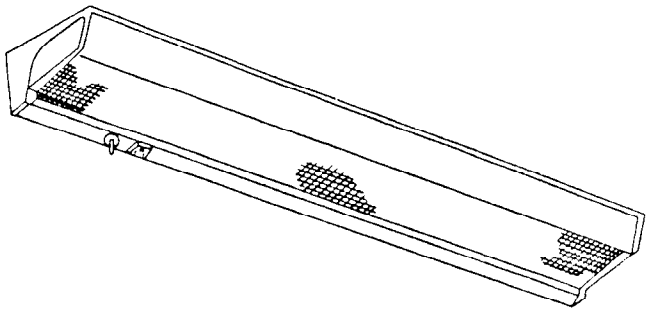

TYPE 223
Two Lamps

Enclosed, Wall Mounted, Direct And/Or Indirect
Fluorescent Fixture

Fixture shall be constructed of cold-rolled steel and shall conform to UL 1570. Ferrous metal surfaces shall be treated with 5-stage coating of zinc phosphate and finished in baked white enamel. Seams shall be sealed or gasketed to prevent light leakage. The lens shall be 0.125 inch nominal thickness (minimum 0.115 inch) of 100 percent virgin clear acrylic plastic, with a regular array of prismatic elements on one surface and smooth on the other. Receptacle shall be 2-pole, 3-wire, rated at 15 amperes and 125 volts, and shall be of the grounding type. On/off pull chain switch shall be provided for downlight. Upward light shall be controlled from a wall switch. Fixture shall have knockouts in the back for wiring through an outlet box and a grounding terminal. Standard ballast shall be the Class P, high power factor type which has been approved for the application by the Certified Ballast Manufacturers. Fixture shall be prewired.

Fixture type indicated on this sheet shall also conform to requirements specified and indicated in the contract documents.

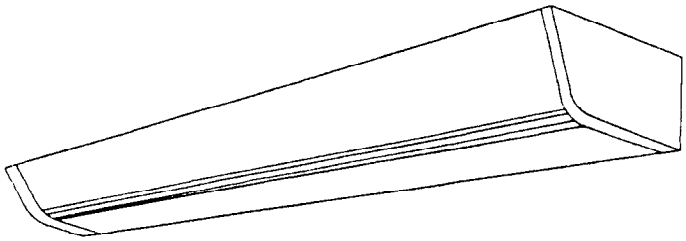

TYPE 224	TYPE 225
One Lamp	Two Lamps
48-inch Length	48-inch Length

Enclosed, Wall Mounted, Direct Fluorescent Fixture

Fixture shall conform to UL 1570. Housing shall be of cold-rolled, die-formed steel. The back housing shall be one piece, solid along its entire length. End plates shall be die-formed and shall be fastened securely to the housing in a manner that permits no light leakage. All metal parts shall receive a rust inhibitive coating and a baked white enamel finish coat. Lens shall be prismatic, one piece, 0.125 inch nominal thickness, and 100 percent virgin acrylic. The lens shall be easily removed without the use of tools and shall be held in place by concealed hinges, by reinforcing ribs along the edges, or by resting on the end plates. The lens shall be attached to the housing so there is no light leakage. Standard ballast(s) shall be the Class P, high power factor type which has been approved for the application by the Certified Ballast Manufacturers. Fixture shall be prewired.

Fixture types indicated on this sheet shall also conform to requirements specified and indicated in the contract documents.

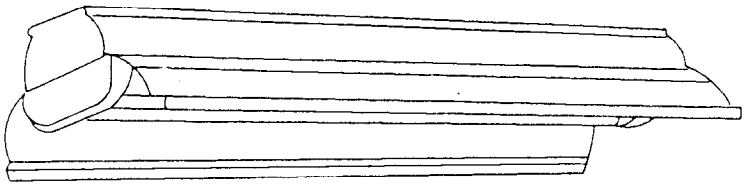

TYPE 230
Suspension Mounted, Industrial,
Open Type Fluorescent Fixture, 4-Foot

First-Suffix	Second-Suffix	Description
A		Two lamps
B		Three lamps
	1	8 to 15 percent uplight
	2	18 to 25 percent uplight

Fixture shall conform to UL 1570. Standard ballast(s) shall be the Class P, high power factor type approved for the application by the Certified Ballast Manufacturers. Channel housing, end fittings, and reflector shall be constructed with die-formed, cold-rolled steel. Reflector finish shall be porcelain enamel, baked white enamel or aluminum oxide. Sockets shall be of the type requiring a forced movement along the longitudinal axis of the lamp for insertion and removal of the lamp. Fixture shall be prewired. Fluoresent tubes shall be protected by a virgin acrylic protective sleeve and clear plastic vented end caps.

Fixture type indicated on this sheet shall also conform to requirements specified and indicated in the contract documents.

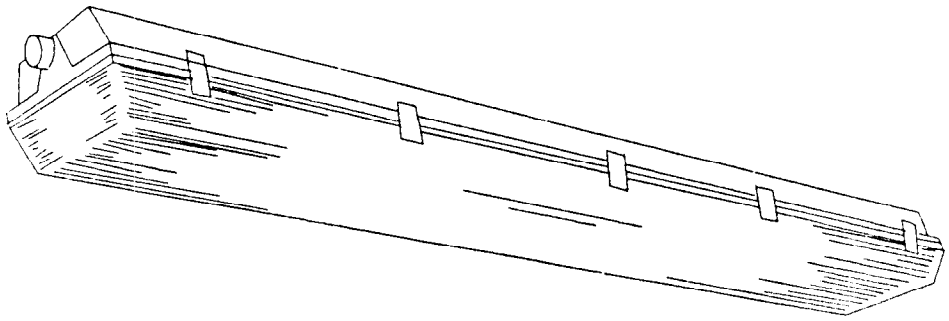

TYPE 232
4-Foot Fixture Length

TYPE 233
8-Foot Fixture Length

Enclosed and Gasketed, Vapor-Tight Fluorescent Fixture
For Surface or Pendant Mounting

Fixture shall conform to UL 1570 and shall be vapor-tight and suitable for use in wet locations. Fixture shall have one-piece housing of molded high-impact plastic or reinforced fiberglass. Housing body shall have an internal, die-formed, cold-rolled steel channel with cover to provide fixture rigidity and to contain electric components. The metal channel and cover shall receive a rust inhibitive coating before application of the finish coat, which shall consist of baked white enamel or porcelain enamel. The lens shall be one piece, of high-impact-resistant acrylic, and shall have smooth exterior surface and stippled or pebbled interior surface. The lens shall be secured to the housing with captive molded plastic or stainless steel spring latches. A continuous gasket shall be provided to form a vapor seal between the lens and the fixture body. All openings in the housing for mounting, conduit, etc., shall be capable of forming a vapor-tight seal. Ballast(s) shall be cold weather type for starting temperatures down to minus 20 degrees F. Standard ballast(s) shall be the Class P, high power factor type approved for the application by the Certified Ballast Manufacturers. Fixture shall be prewired, and provided with lamps that are properly mated to the ballast operating characteristics.

Fixture types indicated on this sheet shall also conform to requirements specified and indicated in the contract documents.

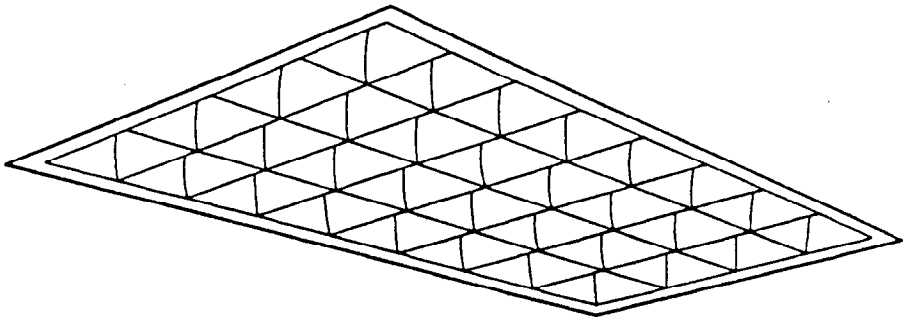

TYPE 234	TYPE 235	TYPE 236
Static Troffer	Air Handling Troffer	Heat Removal/ Transfer Troffer

Recessed Fluorescent Fixture, 2-foot by 4-foot, With Parabolic Louver

First Suffix	Second Suffix	Description
A		Two-lamp, 12-cell louver
B		Three-lamp, 18-cell louver
C		Four-lamp, 32-cell louver
	1	Type 200 emergency unit

Fixture shall conform to UL 1570. Housing, trim flanges if any, shall be die-formed, cold-rolled steel embossed if necessary to ensure structural rigidity. Metal parts to be painted shall receive one or more rust inhibitive coatings before application of the finish coat. Reflective surfaces shall be finished to provide an initial and minimum reflectance of not less than 85 percent. The louver shall be the anodized or semi-specular finished aluminum type consisting of inter- connected cellular baffles not less than three nor more than four inches in depth. The louver shall be hinged on either longitudinal side using die-formed steel hinges, and shall be held securely in place by the hinges and spring-steel latches that are inconspicuous or concealed from view when louver is in place and latches are closed. Securing the louver in place shall prevent light leakage and movement of the louver when subjected to normal vibrations. The ballast(s) and fixture wiring shall be concealed by a snap-in type of metal cover which can be removed and replaced without the use of tools. Standard ballast(s) shall be of the Class P, high power factor type that has been approved by the Certified Ballast Manufacturers for the application. Ballast(s), lampholders, louver and the wireway cover shall be removable and replaceable without removal of the fixture from the ceiling. Fixture shall be prewired.

Fixture type indicated on this sheet shall also conform to requirements specified and indicated in the contract documents.

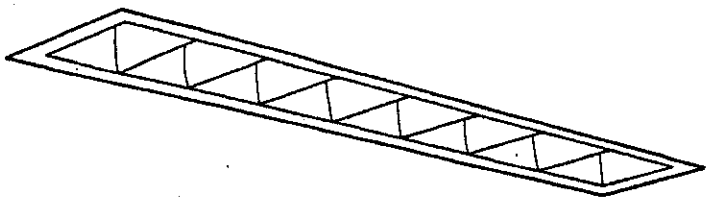

TYPE 237 Static Troffer	TYPE 238 Air Handling	TYPE 239 Heat Removal/ Transfer Troffer

Recessed Fluorescent Fixture, 1-foot by 4-foot, with parabolic louver

First Suffix	Second Suffix	Description
A		Single lamp, 8-cell louver
B		Two-lamp, 8-cell louver
C		Three-lamp, 16-cell louver
	1	Type 200 emergency unit

Fixture shall conform to UL 1570. Housing, trim flanges if any, shall be die-formed, cold-rolled steel embossed if necessary to ensure structural rigidity. Metal parts to be painted shall receive one or more rust inhibitive coatings before the application of the finish coat. Reflective surfaces shall be finished to provide an initial and minimum reflectance of not less than 85 percent. The louver shall be the anodized or semi-specular finished aluminum type consisting of inter- connected cellular baffles not less than three nor more than four inches in depth. The louver shall be hinged on either longitudinal side using die-formed steel hinges, and shall be held securely in place by the hinges and spring-steel latches that are inconspicuous or concealed from view when louver is in place and latches are closed. Securing of the louver in place shall prevent light leakage and movement of the louver when subjected to normal vibrations. The ballast(s) and fixture wiring shall be concealed by a snap-in type of metal cover which can be removed and replaced without the use of tools. Standard ballast(s) shall be of the Class P, high power factor type that has been approved by the Certified Ballast Manufacturers for the application. Ballast(s), lampholders, louver and the wireway cover shall be removable and replaceable without removal of the fixture from the ceiling. Fixture shall be prewired.

Fixture types indicated on this sheet shall also conform to requirements specified and indicated in the contract documents.

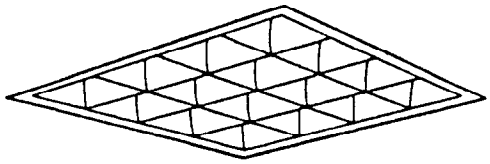

TYPE 240	TYPE 241	TYPE 242
Static Troffer	Air Handling Troffer	Heat Removal/ Transfer Troffer

Recessed Fluorescent Fixture, 2-foot by 2-foot, with parabolic louver

First Suffix	Second Suffix	Description
A		Single U lamp, 9-cell louver
B		Two U lamps, 9-cell louver
C		Two U lamps, 16-cell louver
D		Three U lamps, 8-cell louver
E		Three U lamps, 16-cell louver
	1	Type 200 emergency unit

Fixture shall conform to UL 1570. Housing, trim flanges if any, shall be die-formed, cold-rolled steel embossed if necessary to ensure structural rigidity. Metal parts to be painted shall receive one or more rust inhibitive coatings before the application of the finish coat. Reflective surfaces shall be finished to provide an initial and minimum reflectance of not less than 85 percent. The louver shall be the anodized or semi-specular finished aluminum type consisting of inter- connected cellular baffles not less than three nor more than four inches in depth. The louver shall be hinged on either longitudinal side using die-formed steel hinges, and shall be held securely in place by the hinges and spring-steel latches that are inconspicuous or concealed from view when louver is in place and latches are closed. Securing the louver in place shall prevent light leakage and movement of the louver when subjected to normal vibrations. The ballast(s) and fixture wiring shall be concealed by a snap-in type of metal cover which can be removed and replaced without the use of tools. Standard ballast(s) shall be of the Class P, high power factor type that has been approved by the Certified Ballast Manufacturers for the application. Ballast(s), lampholders, louver and the wireway cover shall be removable and replaceable without removal of the fixture from the ceiling. Fixture shall be prewired.

Fixture types indicated on this sheet shall also conform to requirements specified and indicated in the contract documents.

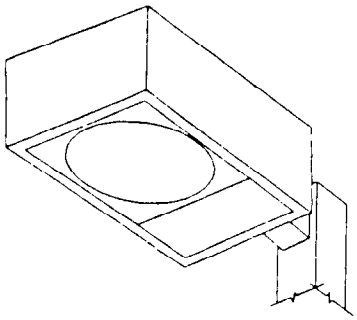

TYPE 401

Enclosed, Integrally Ballasted, Rectangular Shaped,
Side Mounted, High Intensity Discharge Lighting Fixture

First Suffix	Second Suffix	Description
A		Rated for mercury vapor lamp
B		Rated for metal halide lamp
C		Rated for high pressure sodium lamp
	1	IES type II medium light distribution
	2	IES type III medium light distribution
	3	IES type V medium light distribution.

Fixture shall conform to UL 1572. Fixture housing shall have sides and doorframe of one-piece extruded aluminum with welded joints and top of crowned sheet aluminum. The top shall be spot welded and sealed watertight. The housing shall be rigidly attached to a square shaped mounting arm of extruded aluminum. The fixture door shall have a flat heat and impact resistant lens of 3/16-inch nominal, tempered glass, and shall be hinged and held in place with captive screws of the same finish as the door. The lens and door shall enclose the lamp compartment. The reflector shall be aluminum of the manufacturer's standard commercial product finish suitable for the lamp type and rating. The ballast shall be of the high power factor type. The ballast and power components shall be mounted on a single bracket and shall be removable. The fixture, including the mounting arm, shall be gasketed to allow air movement but prevent the entry of dust and insects. Ballast shall be of the constant wattage autotransformer type for mercury vapor lamps, lead-peak autotransformer type for metal halide lamps, and regulating type for high pressure sodium lamps. Ballast shall be capable of starting and operating the lamp at ambient temperatures ranging from minus 20 degrees F to 105 degrees F. A square extruded aluminum pole including anchor type base, anchor bolts and mounting hardware shall be provided by the fixture manufacturer and shall be the manufacturer's standard commercial product for the number of fixtures and wind load indicated or specified. The fixture housing mounting arm shall have a dark duranodic bronze finish. The fixture shall be prewired and shall have a mogul base glazed porcelain lampholder.

Fixture type indicated on this sheet shall also conform to requirements specified and indicated in the contract documents.

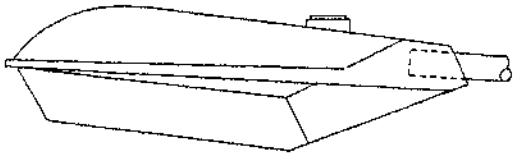

TYPE 405

90^0 Cutoff, Enclosed, Heavy Duty, Integrally Ballasted,
High Intensity Discharge Roadway Lighting Fixture

First Suffix	Second Suffix	Description
A		Rated for mercury lamp
B		Rated for metal halide lamp
C		Rated for high pressure sodium lamp
	1	IES type I medium light distribution
	2	IES type II medium light distribution
	3	IES type III medium light distribution
	4	IES type IV medium light distribution
	5	IES type V medium light distribution

Fixture shall conform to UL 1572, and with ANSI C136.10 as specified below. Fixture housing shall be of die-cast aluminum with the bottom plate hinged to the top housing. The bottom plate shall be held in place by hinge and spring latch and shall have a continuous, weather-tight gasket that filters air entering or leaving the optical and power compartment. The housing finish shall be baked enamel. The fixture shall have an integral slipfitter to accept a 1-1/2-inch to 2-inch mast arm. The reflector shall be aluminum of the manufacturer's standard commercial product finish suitable for the lamp type and rating. The lens shall be tempered heat and impact-resistant flat glass and shall be held securely in the bottom plate. The fixture shall be provided with the locking-type mounting receptacle for photoelectric control in accordance with ANSI C136.10. Photocell shall be provided on top of fixture. Ballast shall be of the high power factor type. Ballast shall be of the constant wattage autotransformer type for mercury vapor lamps, the lead-peak regulated type for metal halide lamps, and the regulated type for high pressure sodium lamps. Ballast shall be capable of starting and operating the lamp at ambient temperatures ranging from minus 20 degrees F to 105 degrees F. The fixture shall be prewired, and shall have a mogul base glazed porcelain lampholder.

Fixture type indicated on this sheet shall also conform to requirements specified and indicated in the contract documents.

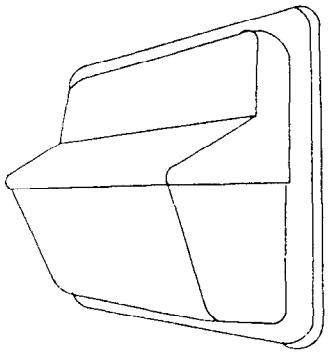

TYPE 501

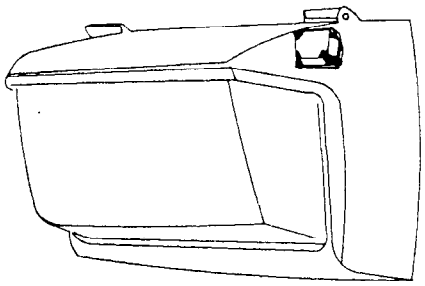

TYPE 502

High Intensity Discharge Fixture for Exterior Wall Mounting, Medium Output

Suffix	Description
	Rated for:
A	50 watt high pressure sodium lamp
B	70 watt high pressure sodium lamp
C	100 watt high pressure sodium lamp
D	150 watt high pressure sodium lamp
E	175 watt metal halide lamp

Fixture shall conform to UL 1572 and shall be rated for use in wet locations. The fixture housing, door assembly, and backplate shall be die-cast aluminum. The door assembly shall have integral cast aluminum hinges. The door assembly shall be held securely to the fixture housing with a stainless steel safety strap when the door is in the open position. The door assembly shall be held firmly against a sealing gasket between the fixture door and housing by stainless steel latches or with stainless steel or brass captive screws when the fixture door is closed. The refractor shall be prismatic borosilicate glass or polycarbonate resin. The refractor shall be gasketed and securely held in the door frame, but shall be easily removed for replacement with a common tool. The reflector shall be aluminum with the manufacturer's standard commercial product finish suitable for the type and rating of the lamp. The fixture shall have manufacturers standard protective coating. Cast knockouts shall be provided in the backplate for recessed outlet box mounting. Ballast shall be of the high power factor type. Ballast shall be of the lead-peak autotransformer type metal halide for lamps and the regulating type for high pressure sodium lamps. Ballast shall be capable of starting and operating the lamp at ambient temperatures from minus 20 degrees F to 105 degrees F. The fixture shall be prewired, and shall have a field adjustable, mogul base glazed porcelain lampholder.

Fixture types indicated on this sheet shall also conform to requirements specified and indicated in the contract documents.

CORPS OF ENGINEERS DEPARTMENT OF THE ARMY

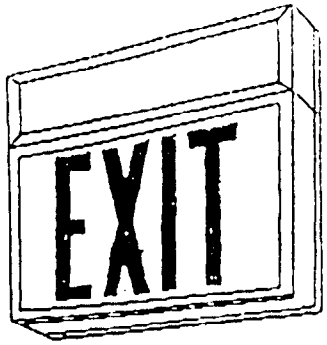

TYPE 604

Stencil Face Exit Signs
With Self-Contained Emergency Battery

First Suffix	Second Suffix	Description
A		Single face
B		Double Face
	1	End mounted
	2	Top mounted
	3	Back mounted
	4	Stem mounted

Units shall conform to UL 924 and NFPA 101, and shall meet or exceed the NFPA 70 time and voltage requirements. The unit shall be duel-rated for use on either 120-Volt or 277-Volt alternating current power supply. Following sustained loss of the normal power supply, the unit shall be capable of automatically and instantaneously illuminating the two 6-volt lighting fixtures for a period of not less than 90 minutes at a battery voltage in excess of 87.5 percent of nominal voltage rating. The battery shall be the nickel-cadmium, pocket plate type designed to be maintenance free during the expected battery life, and shall be warranted for not less than 3 years from the date of purchase of the unit, and shall be field replaceable without requiring removal of other components. The battery charger shall be the solid-state type and shall provide a continuous, variable, current limited, filtered and regulated charge rate. The battery and charger shall be contained in a steel cabinet no less than 20 gauge thickness with an enamel finish, unless otherwise approved, which shall be equipped with a push-to-test switch and a meter or LED to visually monitor operations to indicate allowable operating battery voltage when the switch is closed. Mounting brackets or shelf shall be provided, complete with all mounting hardware, all with a finish to match the finish or color of the cabinet. All ferrous metal parts shall receive a rust inhibitive coating before application of the finish coat. The fixture shall have a light-emitting diode pilot light to show that the battery charger is functioning. Fixture shall be prewired, with wiring concealed in the illuminated portion of the fixture housing. The transilluminated letters will be red except where state or country standards mandate green. The contrast level of the letters shall be symmetrical with not less than a 0.7 value, plus or minus 3 percent. The luminance output for normal and emergency mode will not be less than 70 cd/sq m. The surface finish shall have a mat texture.

Fixture type indicated on this sheet shall also conform to requirements specified and indicated in the contract documents.