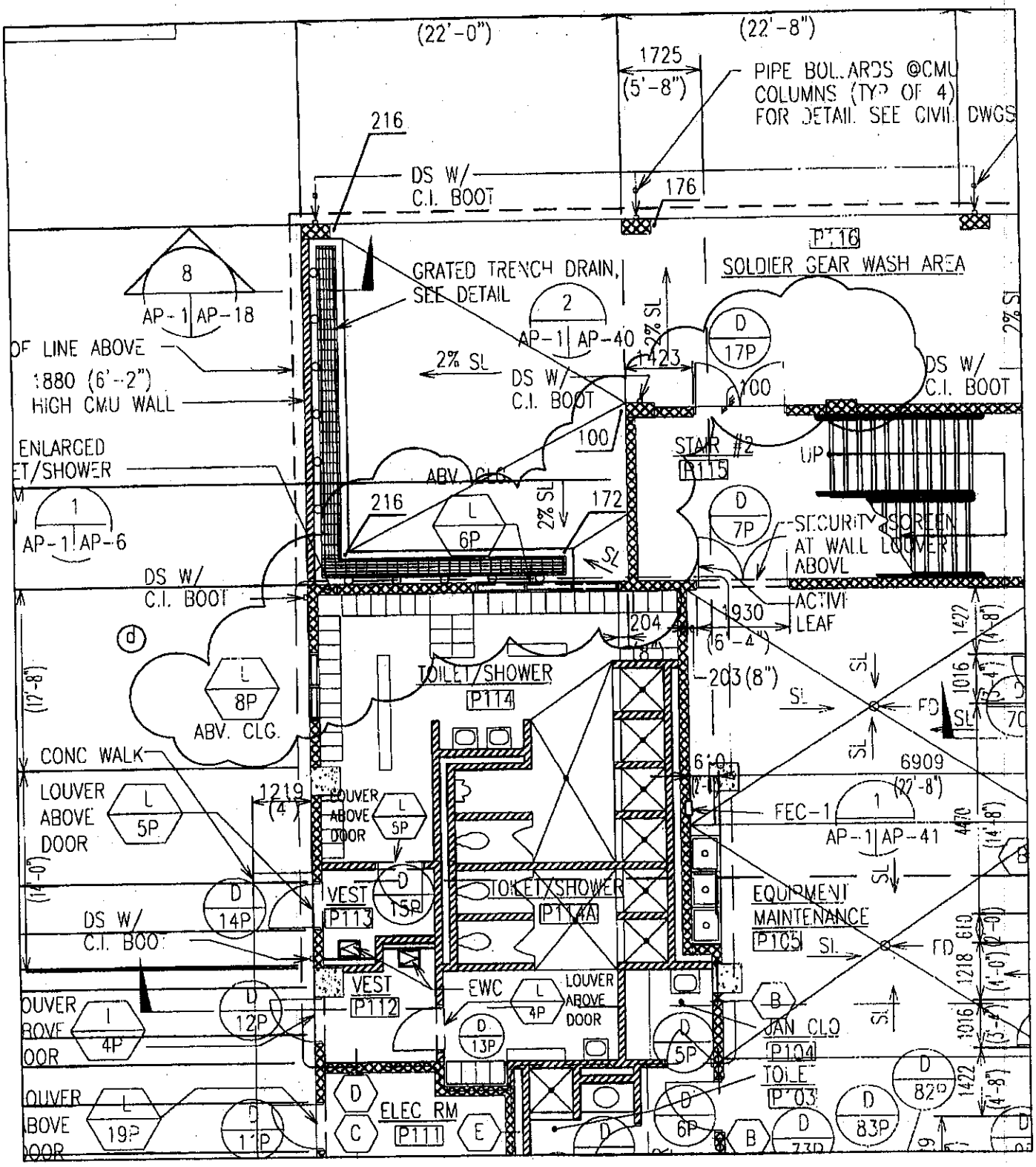

FY02 MCA PN55038
WBR AVIATION BRIGADE COMPLEX PH6A3
WHEELER ARMY AIRFIELD, OAHU, HAWAII

DRAWING NO.	SHEET NO.	RING NO.	SKETCH NO.
141 85 02	AP-1	4	

USArmyCorp of Engineers

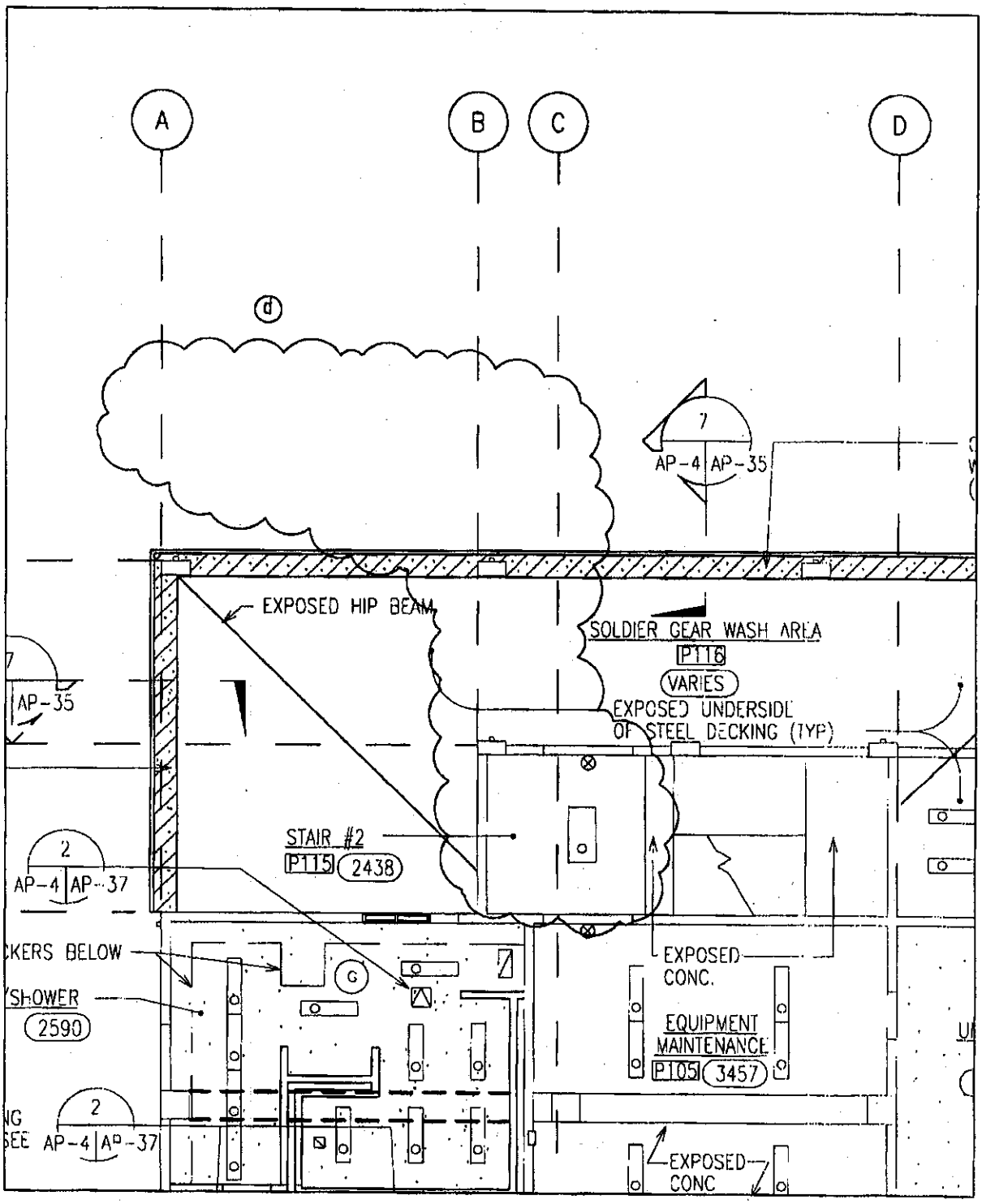

FY02 MCA PN55038
WBR AVIATION BRIGADE COMPLEX PH6A3
WHEELER ARMY AIRFIELD, OAHU, HAWAII

DRAWING NO.	SHEET NO.	RING NO.	SKETCH NO.
141 85 02	AP-4	7	

US Army Corps of Engineers

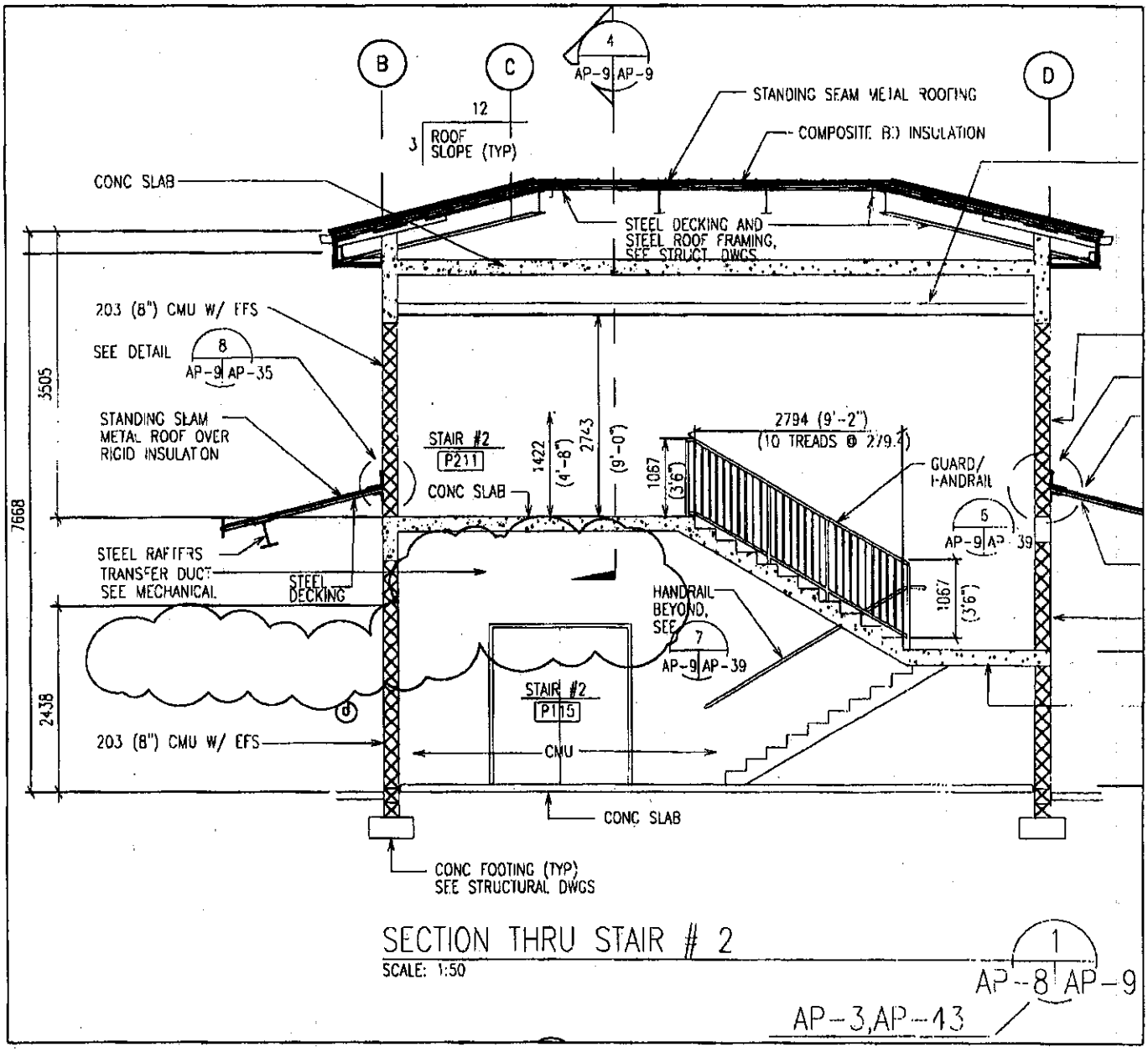

SECTION THRU STAIR # 2

SCALE: 1:50

1
AP-8 AP-9

AP-3,AP-13

FY02 MCA PN55038 WBR AVIATION BRIGADE COMPLEX PH6A3 WHEELER ARMY AIRFIELD, OAHU, HAWAII			
DRAWING NO.	SHEET NO.	RING NO.	SKETCH NO.
141 85 02	AP-9	11	

USArmyCorps of Engineers

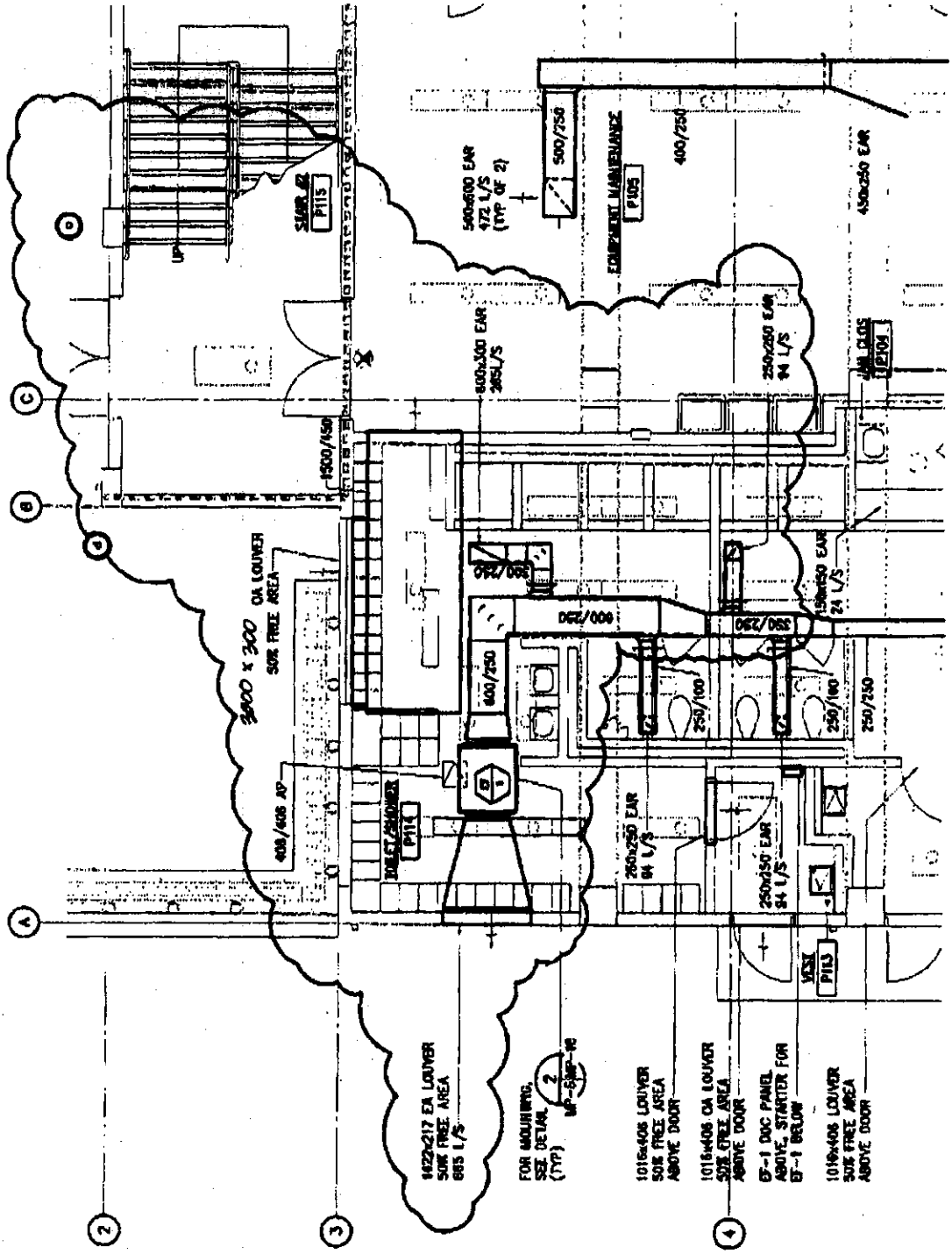

FY02 MCA PN55038
WBR AVIATION BRIGADE COMPLEX PH6A3
WHEELER ARMY AIRFIELD, OAHU, HAWAII

DRAWING NO.	SHEET NO.	RING NO.	SKETCH NO.
141 85 02	MP-6	67	

US Army Corps of Engineers

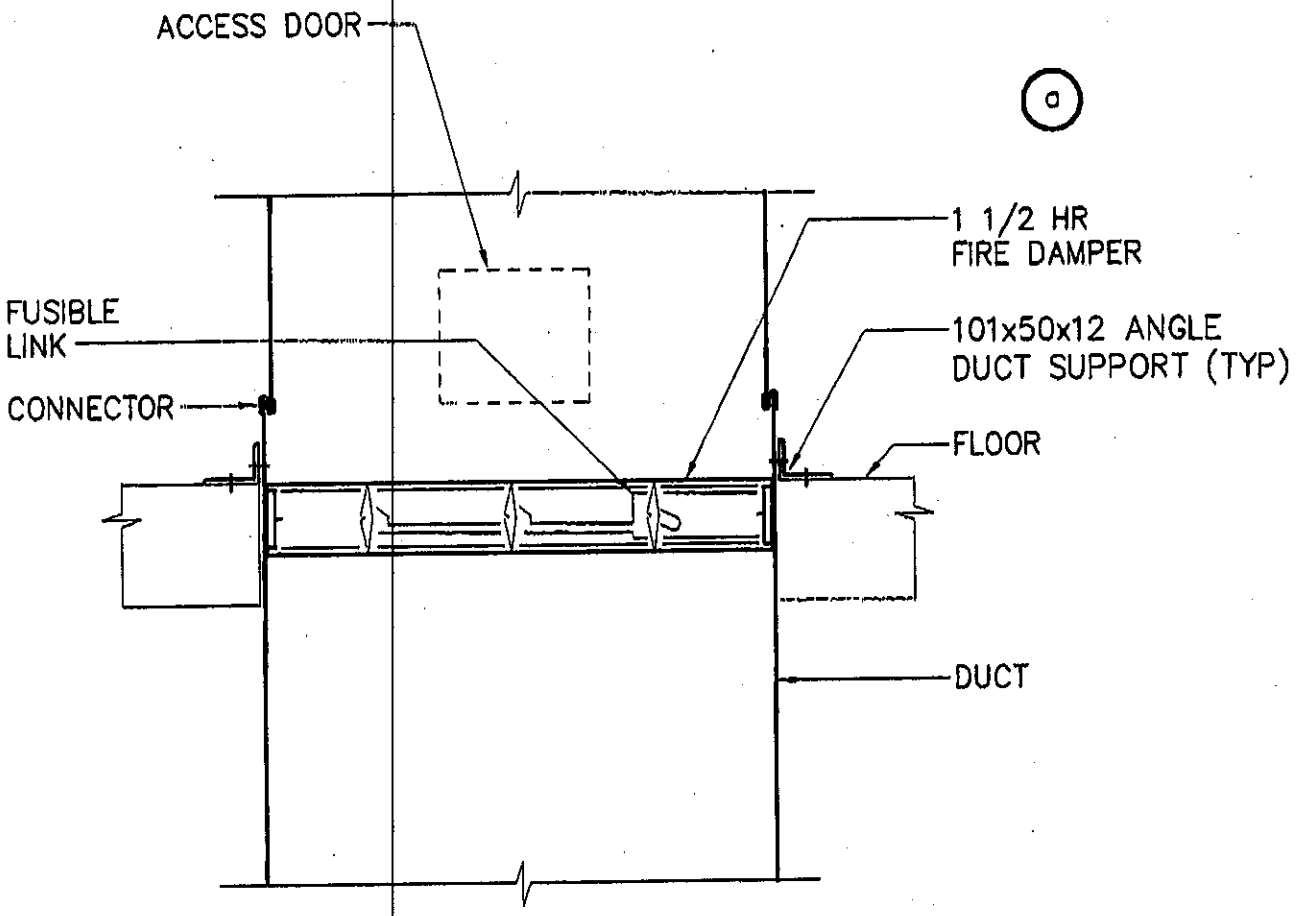

d

NOTE:
THIS DETAIL SUBJECT TO MANUFACTURER'S INSTALLATION INSTRUCTIONS AND CONDITIONS OF THEIR LISTINGS. ACCESS DOOR SHALL BE LARGEST AVAILABLE THAT CAN BE INSTALLED ON DUCT.

7 FIRE DAMPER DETAIL

MP-7 | MP-16 SCALE: NONE

FY02 MCA PN55038
WBR AVIATION BRIGADE COMPLEX PH6A3
WHEELER ARMY AIRFIELD, OAHU, HAWAII

DRAWING NO.	SHEET NO.	RING NO.	SKETCH NO.
141 85 02	MP-16	77	

US Army Corps of Engineers

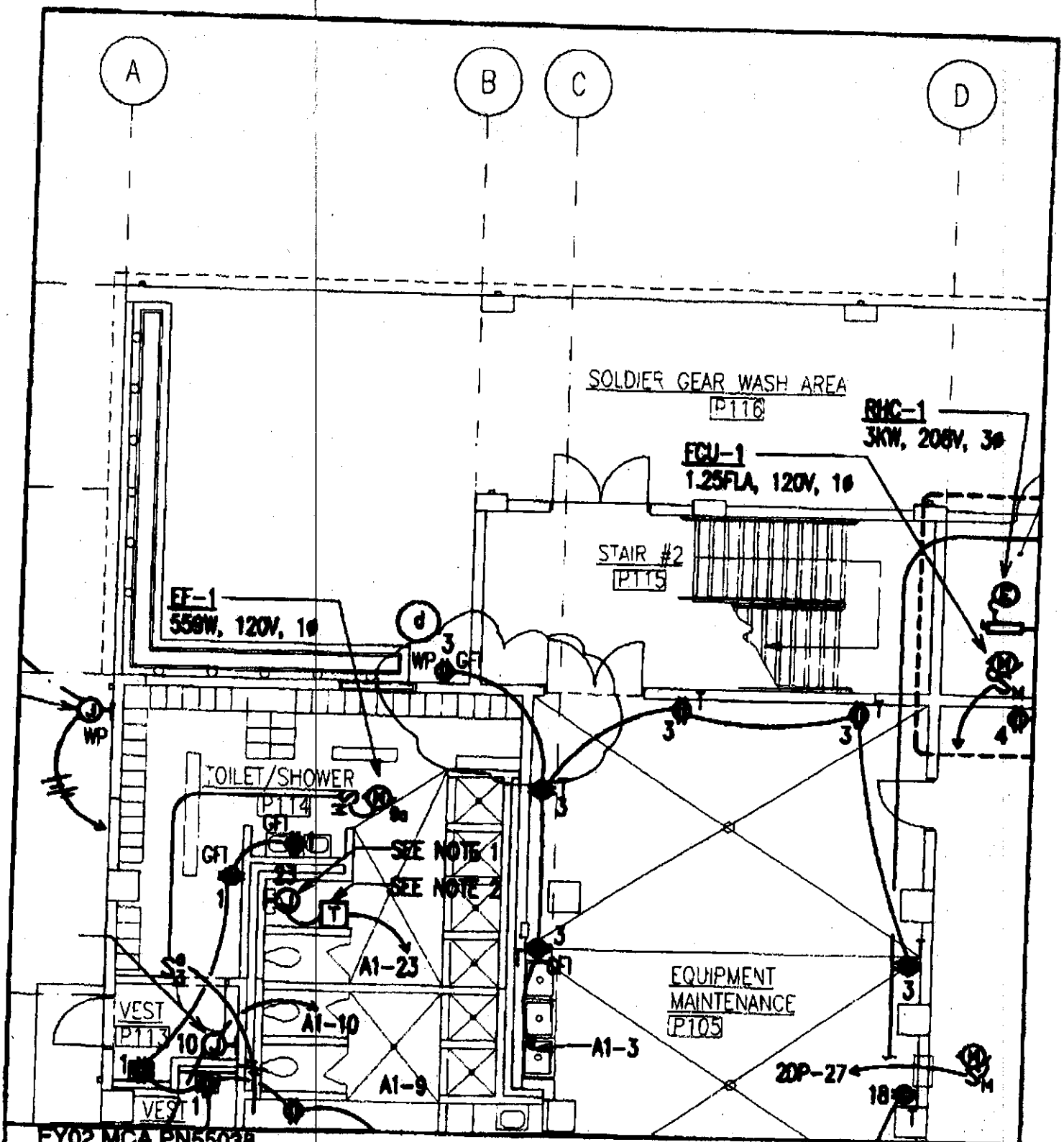

FY02 MCA PN55038
WBR AVIATION BRIGADE COMPLEX PH6A3
WHEELER ARMY AIRFIELD, OAHU, HAWAII

DRAWING NO.	SHEET NO.	RING NO.	SKETCH NO.
141 85 02	EP-2	80	

US Army Corps of Engineers