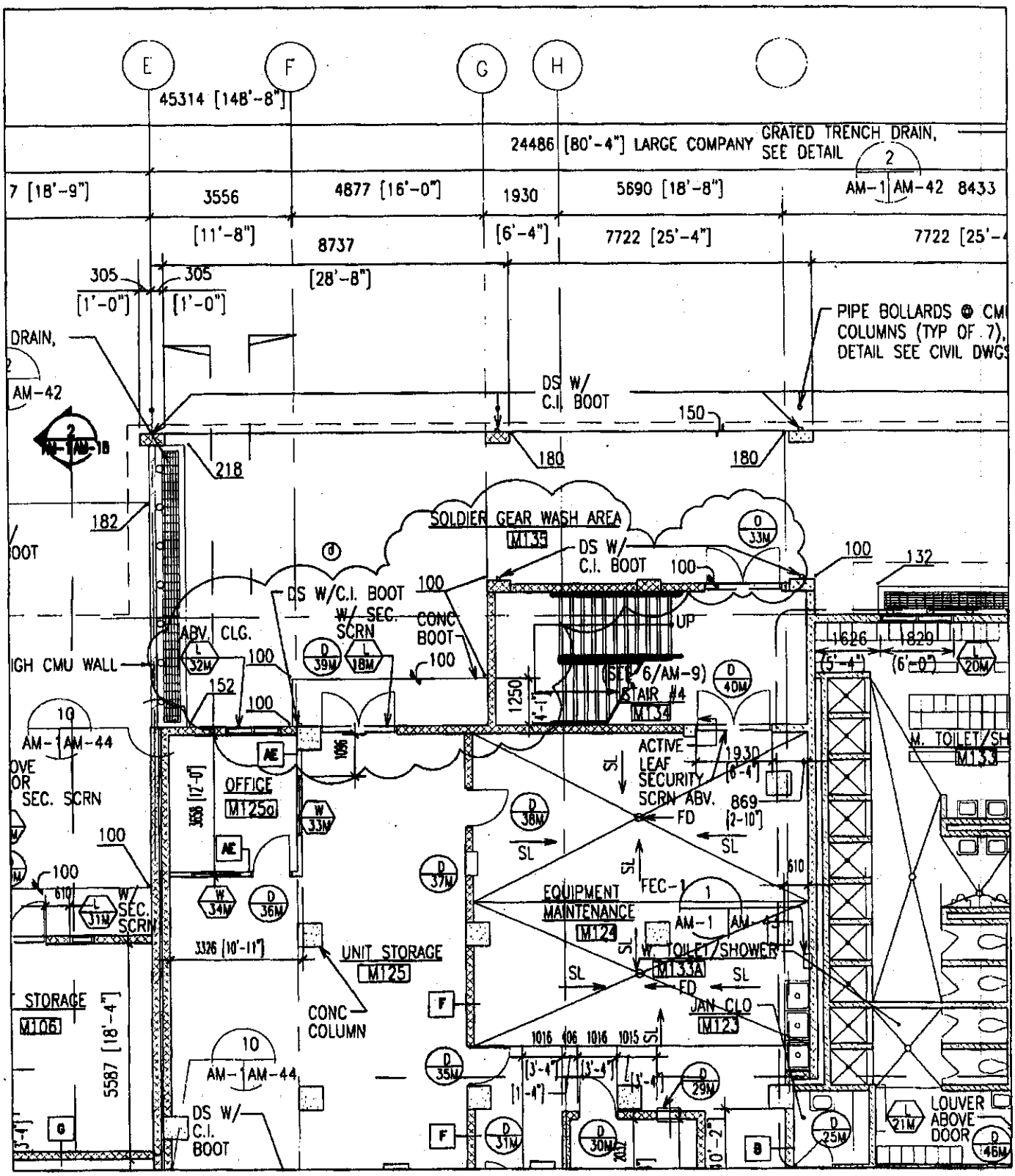


FY02 MCA PN55038
WBR AVIATION BRIGADE COMPLEX PH6A3
WHEELER ARMY AIRFIELD, OAHU, HAWAII

| DRAWING NO. | SHEET NO. | RING NO. | SKETCH NO. |
|---|---|---|---|
| 141 85 02 | AM-1 | 4 | |

US Army Corps of Engineers

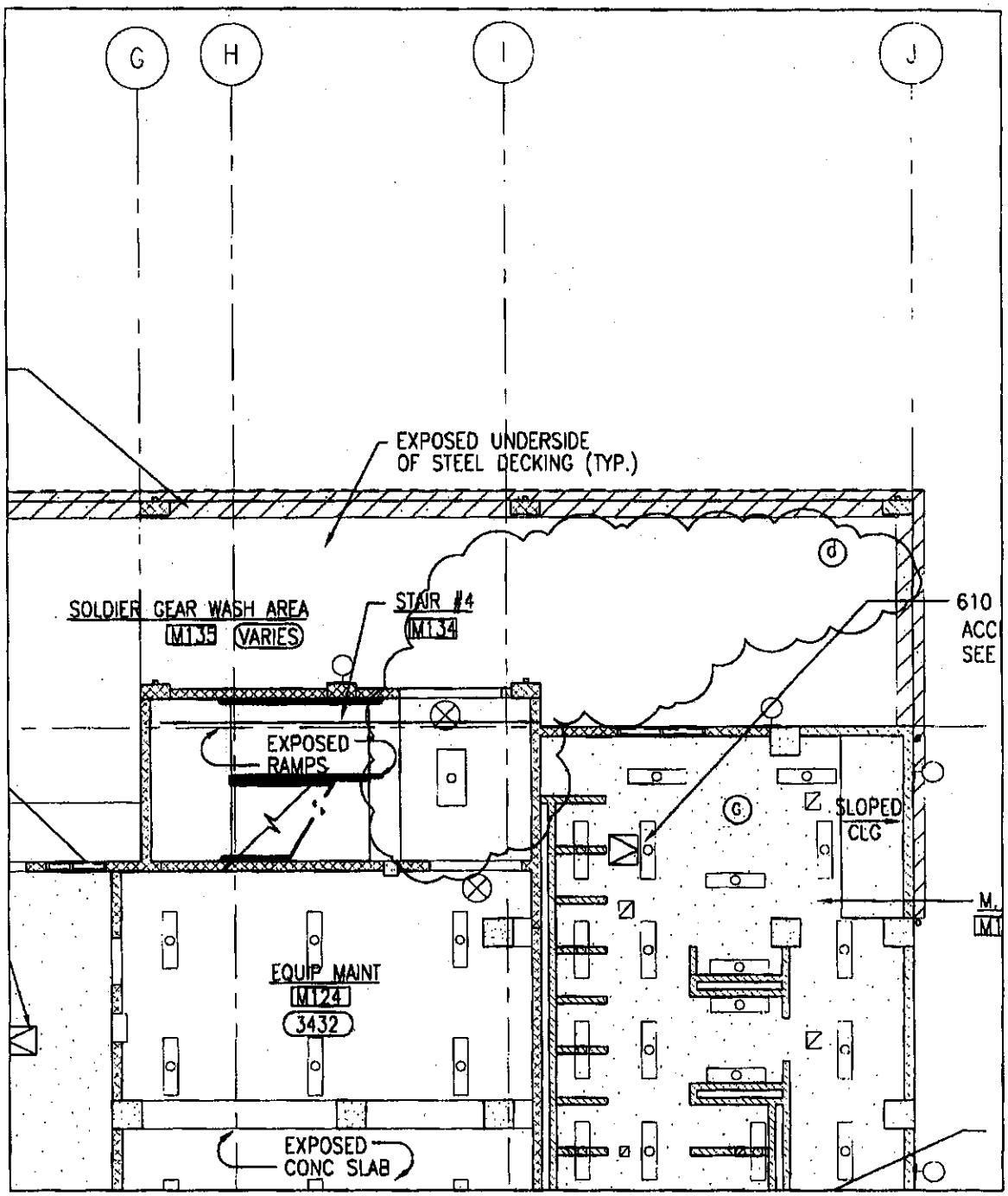


FY02 MCA PN55038
WBR AVIATION BRIGADE COMPLEX PH6A3
WHEELER ARMY AIRFIELD, OAHU, HAWAII

| DRAWING NO. | SHEET NO. | RING NO. | SKETCH NO. |
|---|---|---|---|
| 141 85 02 | AM-4 | 7 | |

US Army Corps of Engineers

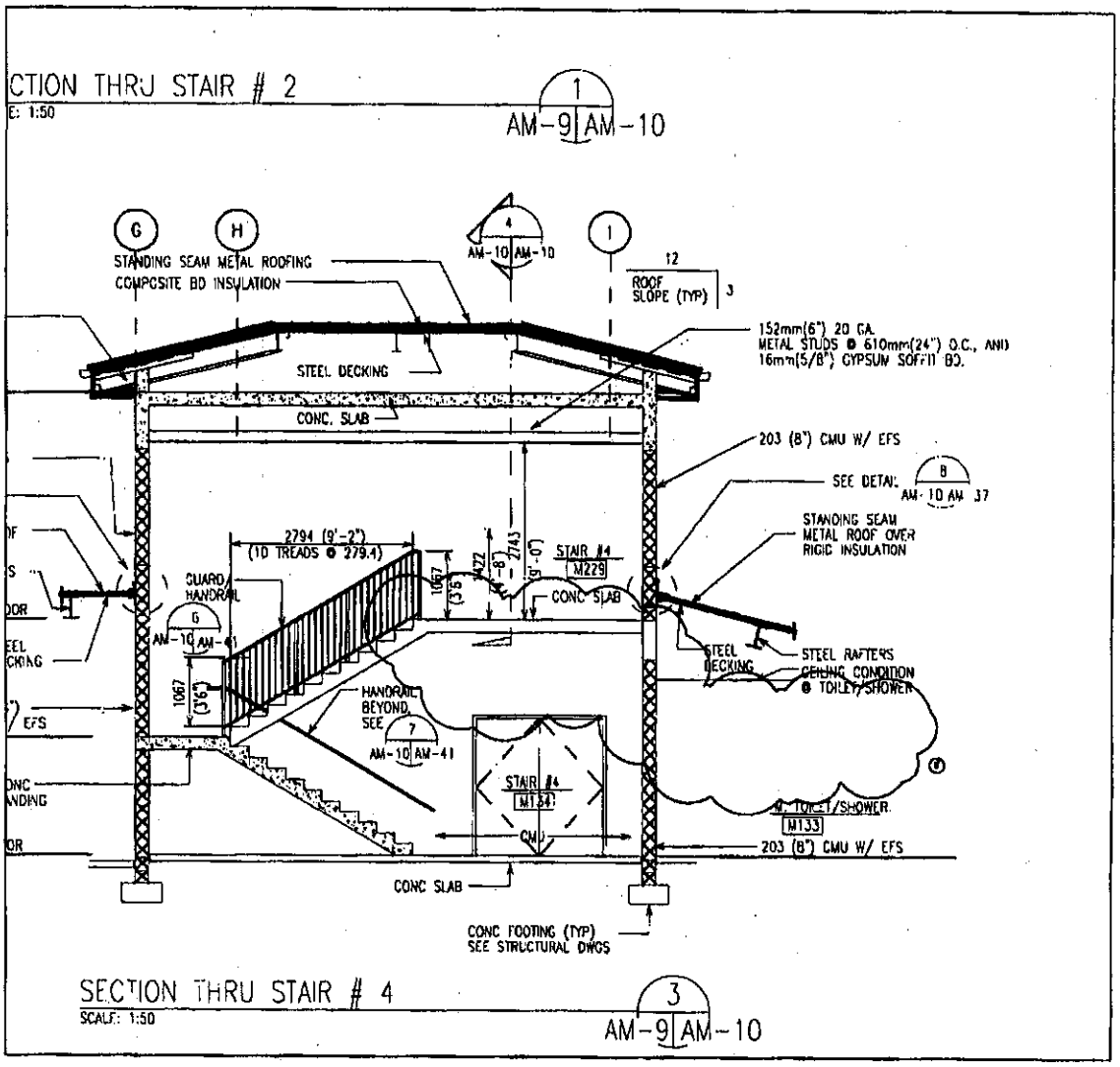


FY02 MCA PN55038
WBR AVIATION BRIGADE COMPLEX PH6A3
WHEELER ARMY AIRFIELD, OAHU, HAWAII

| DRAWING NO. | SHEET NO. | RING NO. | SKETCH NO. |
|---|---|---|---|
| 141 85 02 | AM-10 | 14 | |

US Army Corps of Engineers

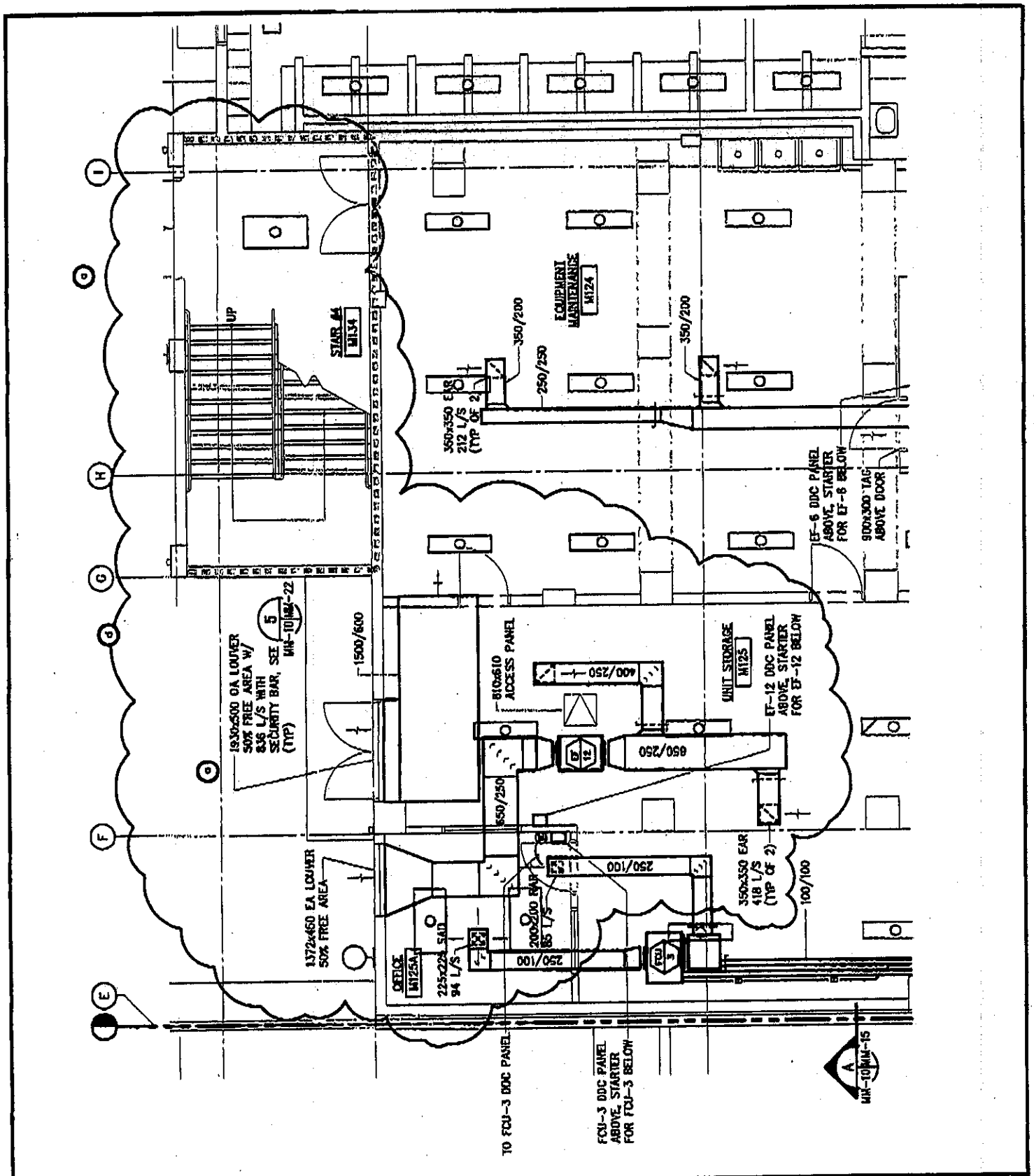


FY02 MCA PN55038
WBR AVIATION BRIGADE COMPLEX PH6A3
WHEELER ARMY AIRFIELD, OAHU, HAWAII

| DRAWING NO. | SHEET NO. | RING NO. | SKETCH NO. |
|---|---|---|---|
| 141 85 02 | MM-10 | 98 | |

US Army Corps of Engineers

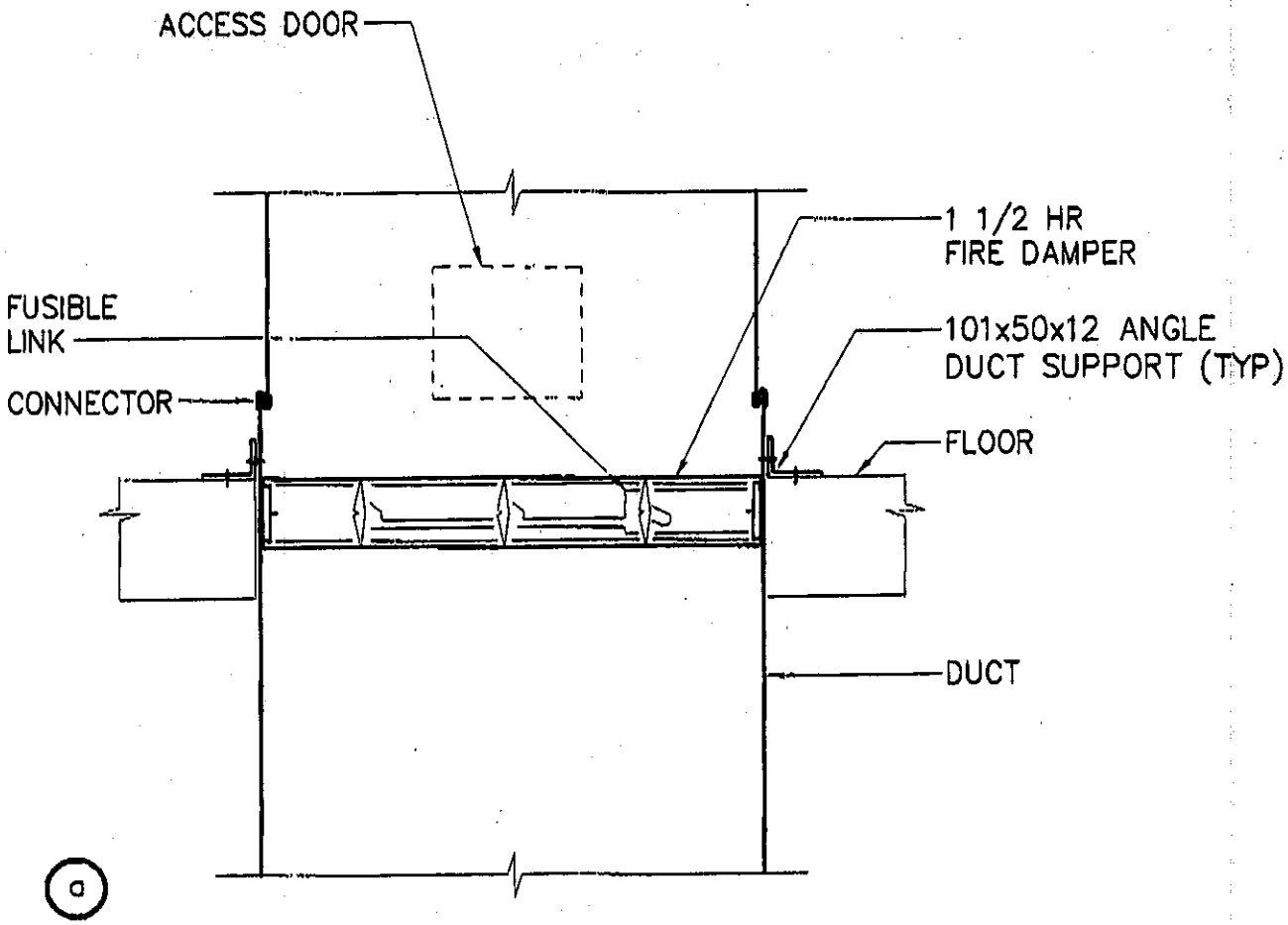


d

NOTE:
THIS DETAIL SUBJECT TO MANUFACTURER'S INSTALLATION INSTRUCTIONS AND CONDITIONS OF THEIR LISTINGS. ACCESS DOOR SHALL BE LARGEST AVAILABLE THAT CAN BE INSTALLED ON DUCT.

7 MM-22

MM-9, MM-11, MM-12

# FIRE DAMPER AT FLOOR DETAIL

SCALE: NONE

FY02 MCA PN55038
WBR AVIATION BRIGADE COMPLEX PH6A3
WHEELER ARMY AIRFIELD, OAHU, HAWAII

| DRAWING NO. | SHEET NO. | RING NO. | SKETCH NO. |
|---|---|---|---|
| 141 85 02 | MM-22 | 110 | |

US Army Corps of Engineers

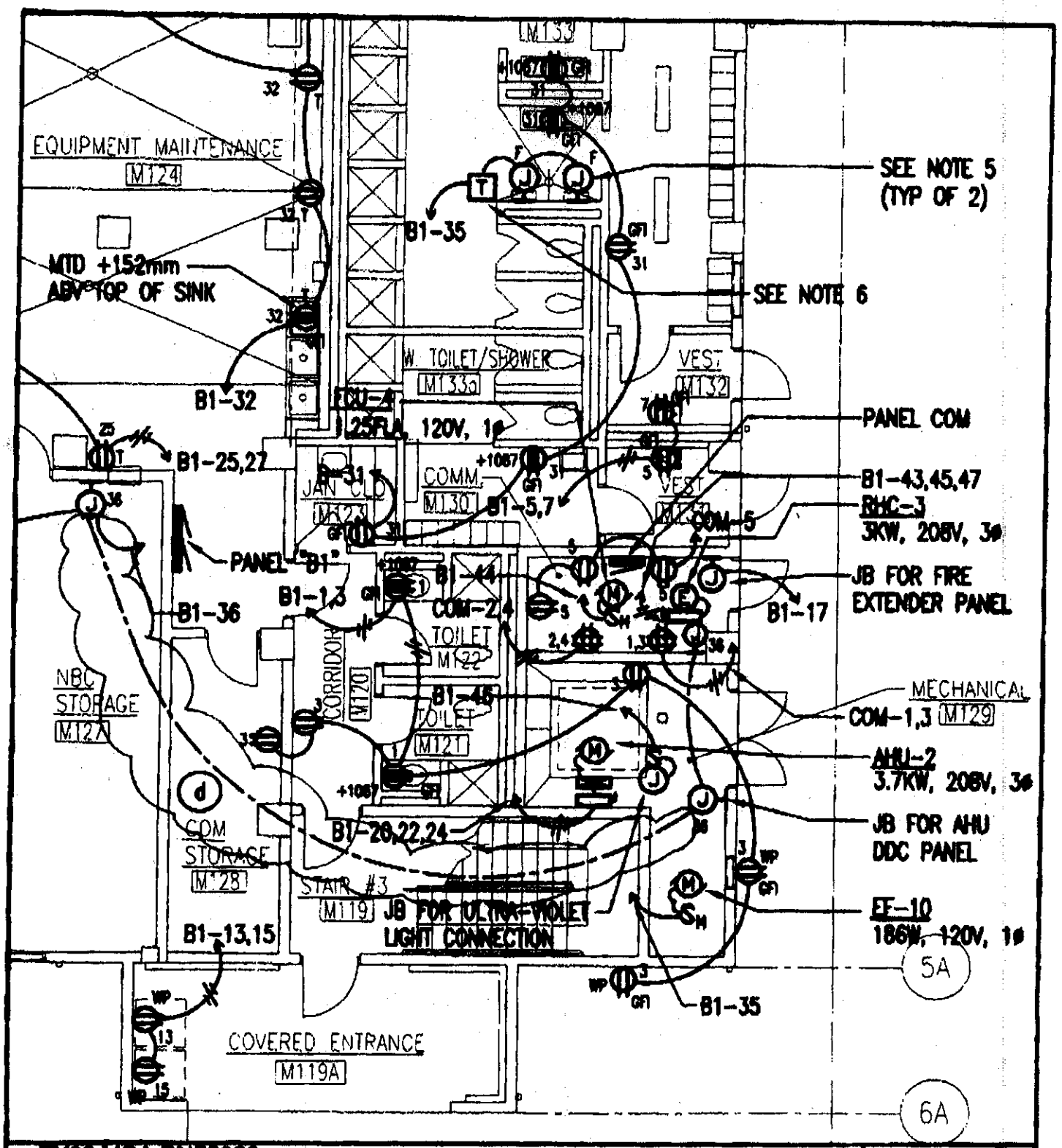


**FY02 MCA PN55038**
**WBR AVIATION BRIGADE COMPLEX PH6A3**
**WHEELER ARMY AIRFIELD, OAHU, HAWAII**

| DRAWING NO. | SHEET NO. | RING NO. | SKETCH NO. |
|---|---|---|---|
| 141 85 02 | EM-2 | 112 | |

US Army Corps of Engineers

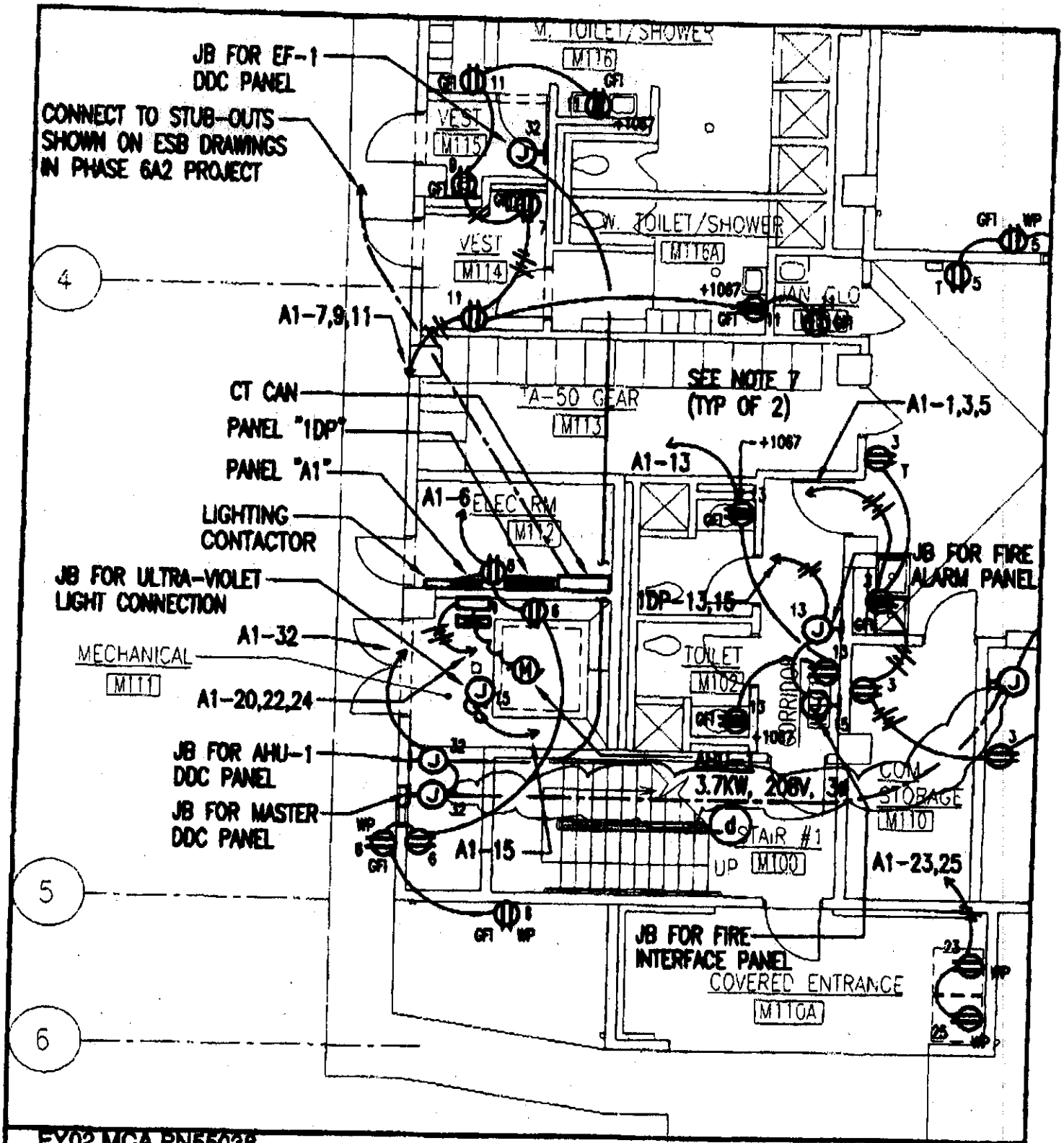


FY02 MCA PN55038
WBR AVIATION BRIGADE COMPLEX PH6A3
WHEELER ARMY AIRFIELD, OAHU, HAWAII

| DRAWING NO. | SHEET NO. | RING NO. | SKETCH NO. |
|---|---|---|---|
| 141 85 02 | EM-2 | 112 | |

US Army Corps of Engineers