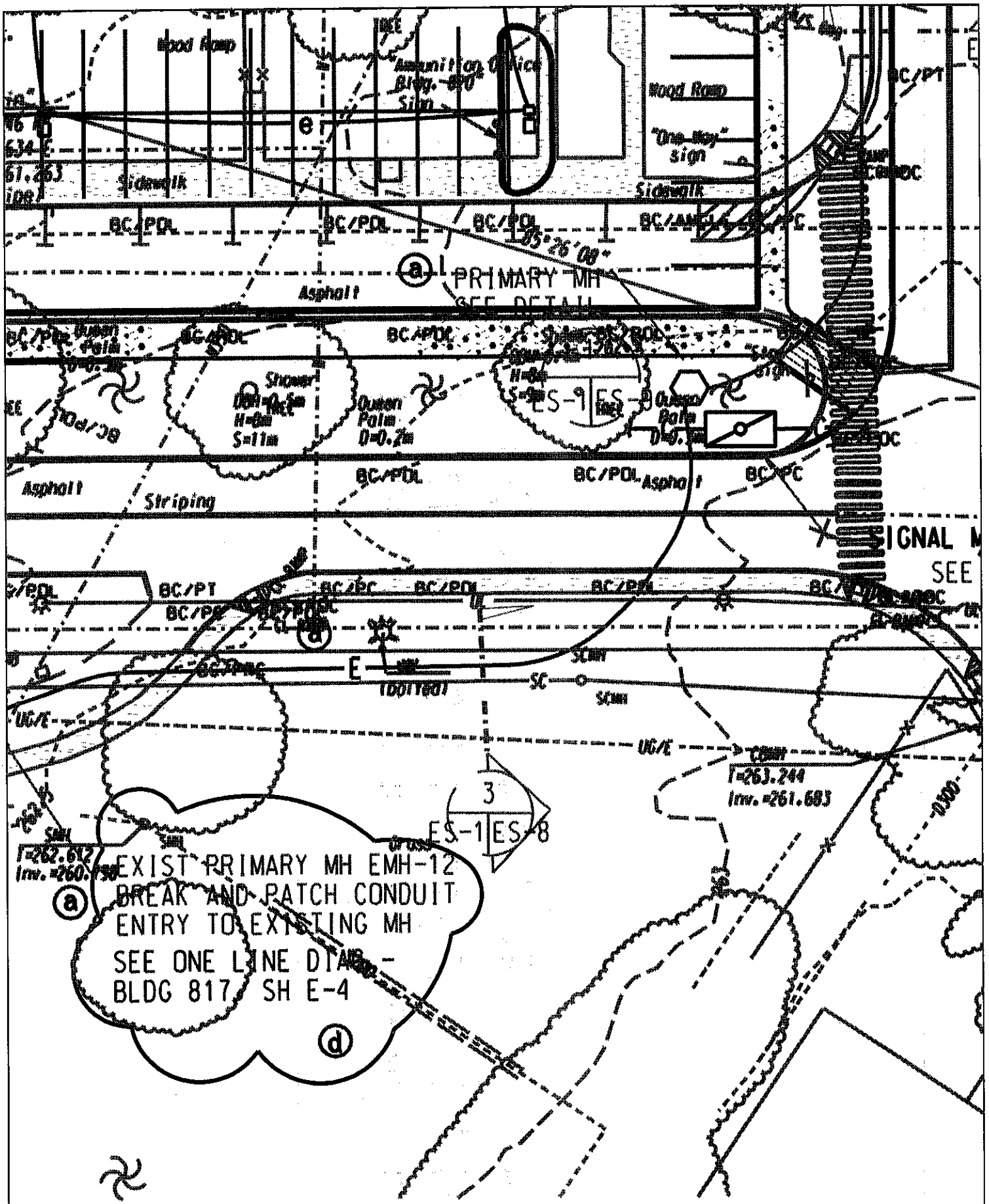

SKETCH 1. DWG NO 721-11-24 SH ES-1. RING 64

...\elec\9-6-02\02wh02e01.dgn 09/09/2002 07:37:21 AM

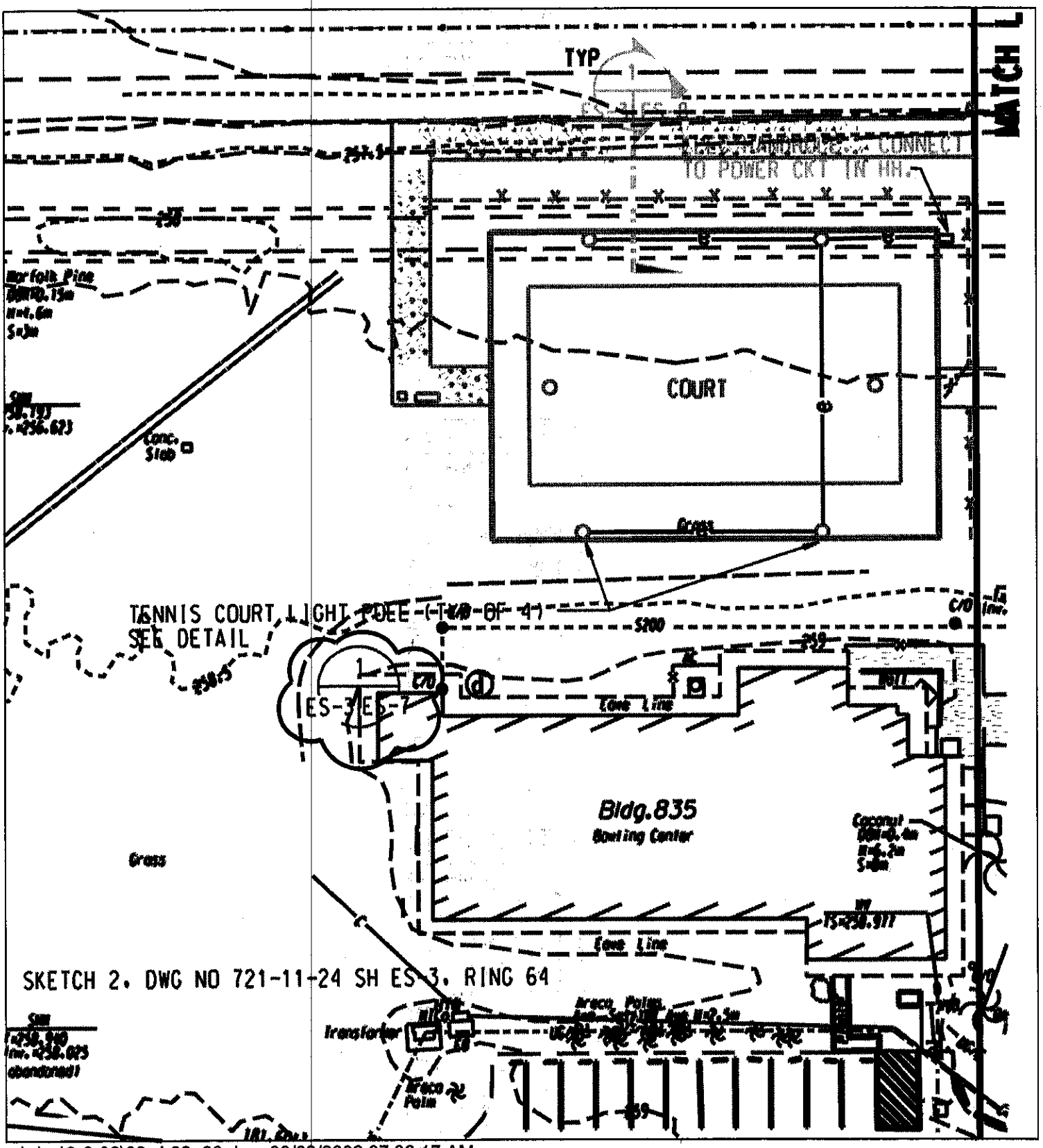

...\elec\9-6-02\02wh02e03.dgn 09/09/2002 07:38:17 AM

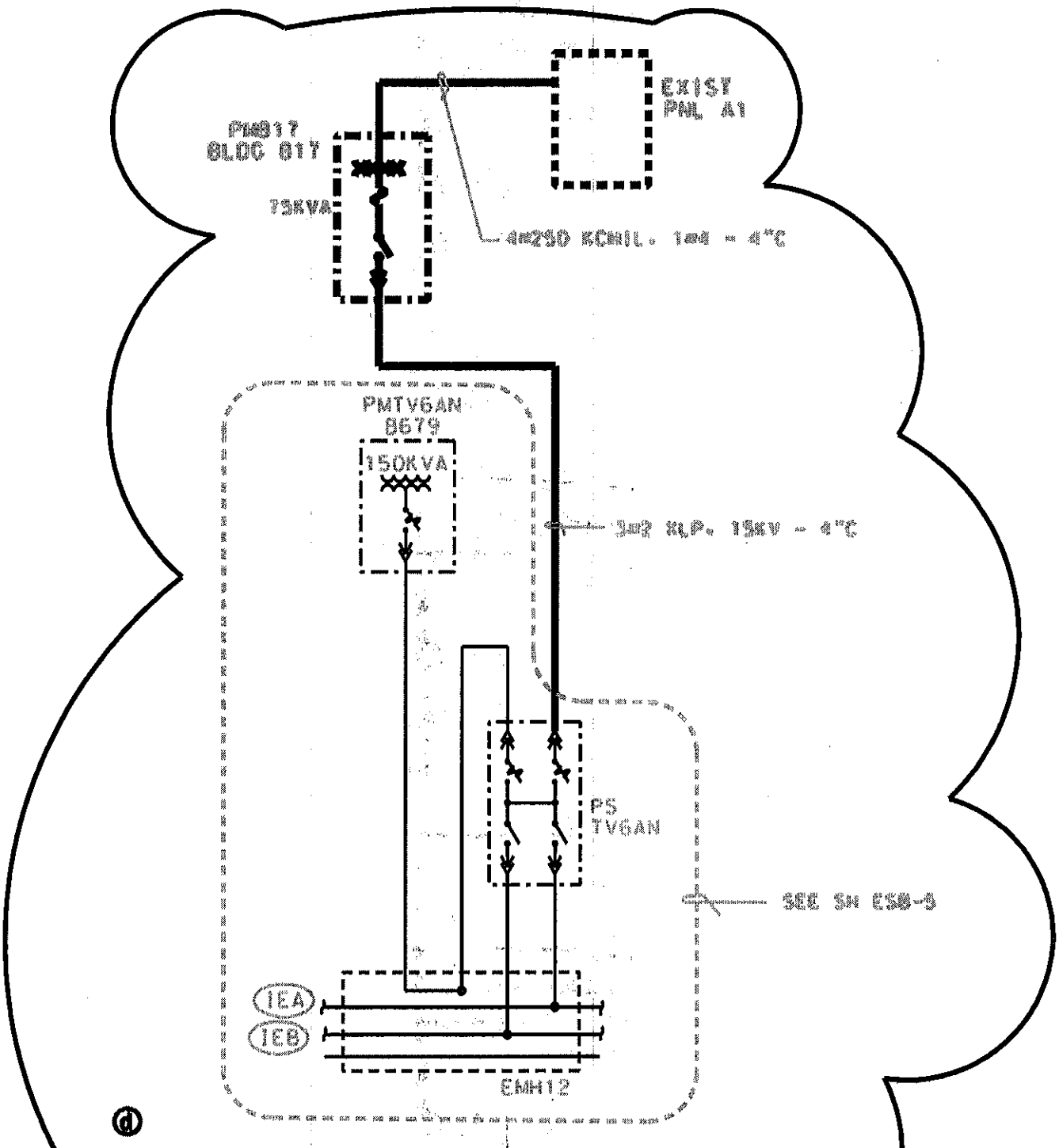

ONE LINE DIAGRAM - BLDG 817

NO SCALE

SKETCH 3, DWG NO 721-11-24 SH ES-4, RING 67

...\elec\9-6-02\02wh02e04.dgn 09/09/2002 07:38:49 AM

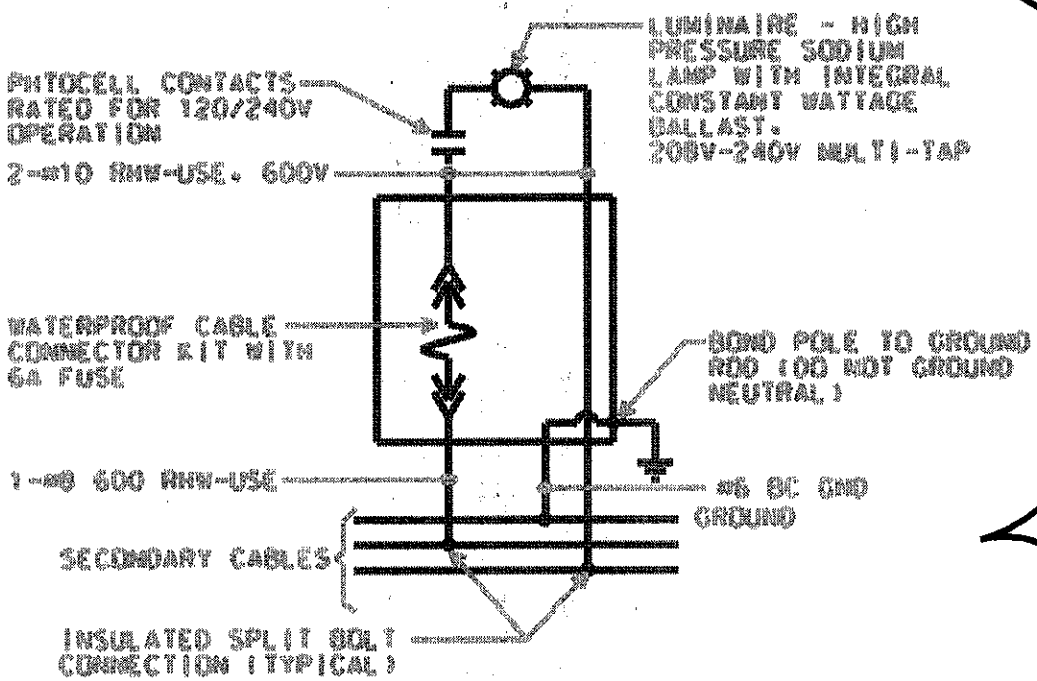

TENNIS COURT LIGHT CONNECTION DIAGRAM

NTS

SKETCH 4. DWG NO 721-11-24. SH ES-7. RING 70

...\elec\9-6-02\02wh02e07.dgn 09/09/2002 07:39:45 AM

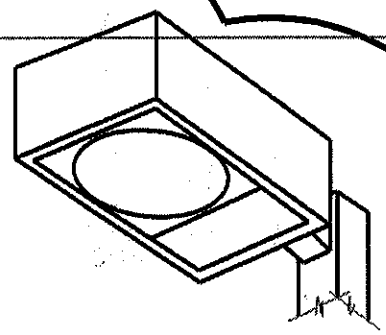

POLE MOUNTED HIGH PRESSURE SODIUM CUTOFF LUMINAIRE

FIXTURE SHALL COMPLY WITH UL-1572

LAMP TYPE: 100W HIGH PRESSURE SODIUM

PROFILE: 1 LAMP

SHIELDING: 3/16" CLEAR TEMPERED GLASS

REFLECTOR: FACETED SPECULAR ALUMINUM

BALLAST: ELECTRONIC HID BALLASTS SHALL BE CONSTANT WATTAGE AUTOTRANSFORMER TYPE; SHALL HAVE LESS THAN 10% BALLAST LOSS; SHALL HAVE TOTAL HARMONIC DISTORTION BETWEEN 10 AND 20%

OTHER: TYPE II DISTRIBUTION

NOM. DIMENSIONS 642 mm X 470 mm X 143 mm

HOUSING: ONE PIECE EXTRUDED ALUMINUM. WELDED JOINTS. LENS HINGED & HELD IN PLACE BY CAPTIVE SCREWS.

MOUNTING: SQ. EXTRUDED MOUNTING ARM AND ROUND POLE WITH ANCHOR TYPE BASE. ANCHOR BOLTS & MOUNTING HARDWARE.

ELECTRICAL: 277 VOLT BALLAST.

FINISH: FIXTURE MOUNTING ARM. HOUSING. DOOR FRAMES. POLE TO BE ANODIZED DARK BRONZE FINISH.

SKETCH 5. DWG NO 721-11-24 SH ES-7. RING 70

...\elec\9-6-02\02wh02e07.dgn 09/09/2002 07:40:15 AM

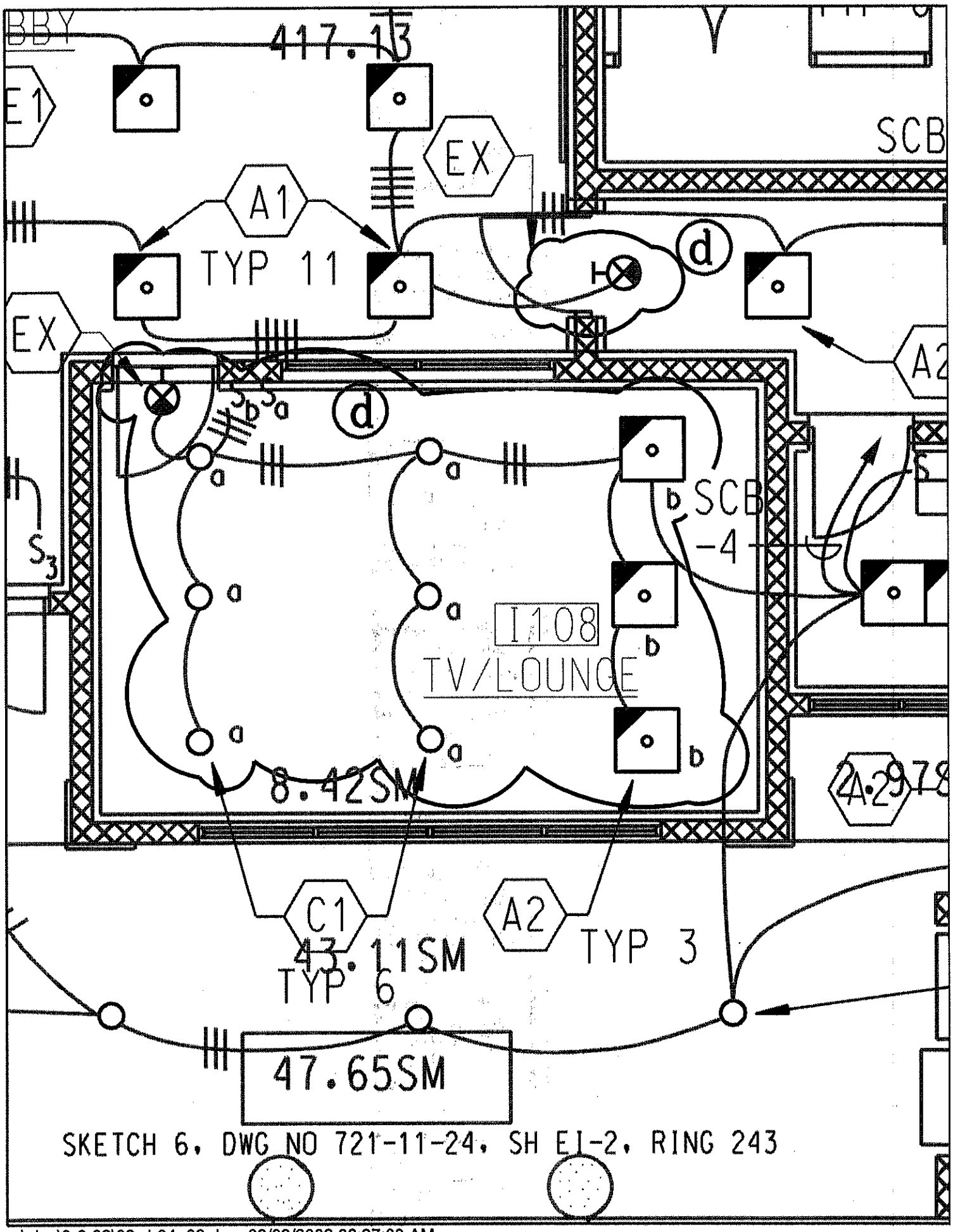

...\elec\9-6-02\02wh04e02.dgn 09/09/2002 08:27:03 AM

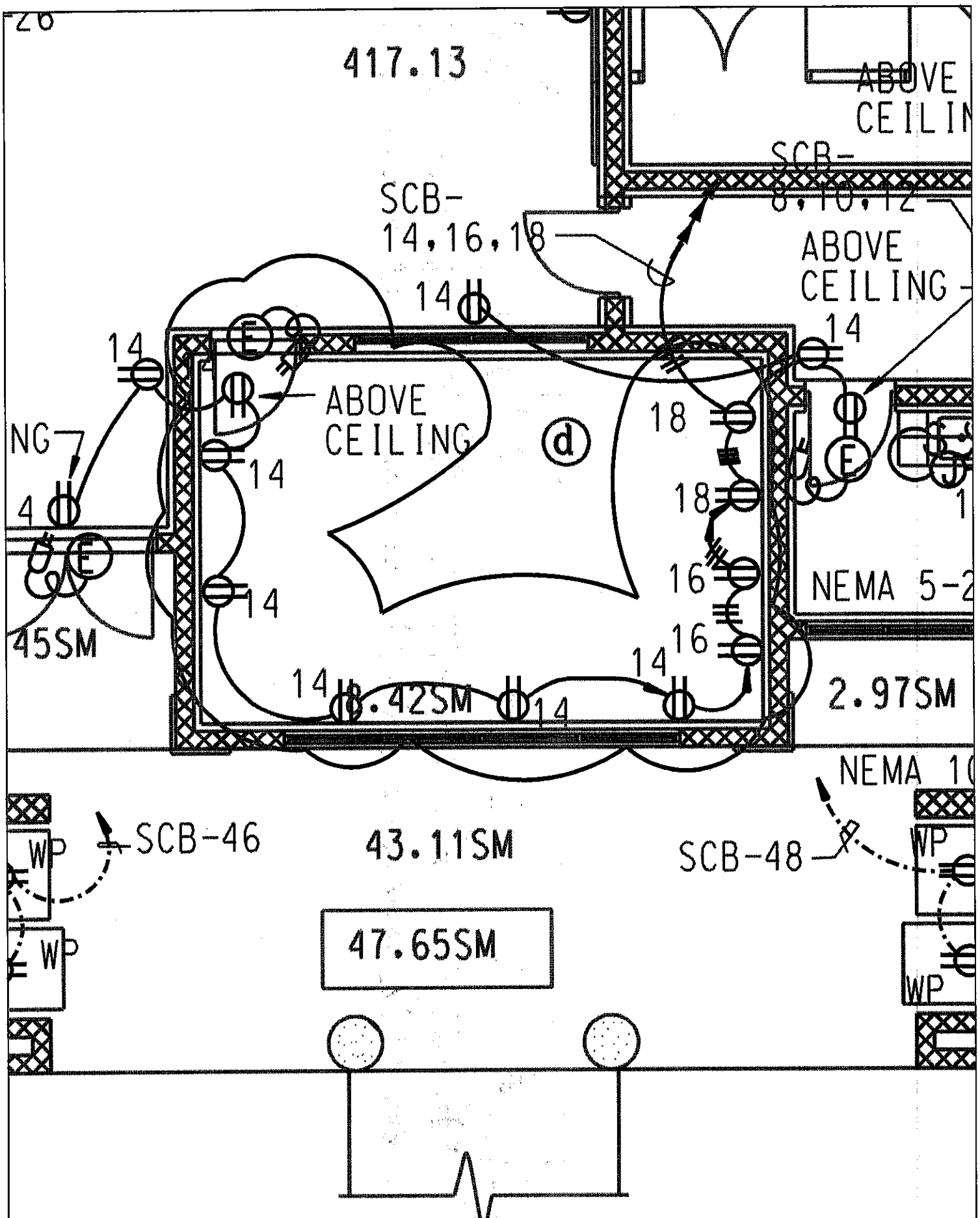

SKETCH 7, DWG NO 721-11-24 SH EI-3, RING 244

...\elec\9-6-02\02wh04e03.dgn 09/09/2002 07:34:59 AM

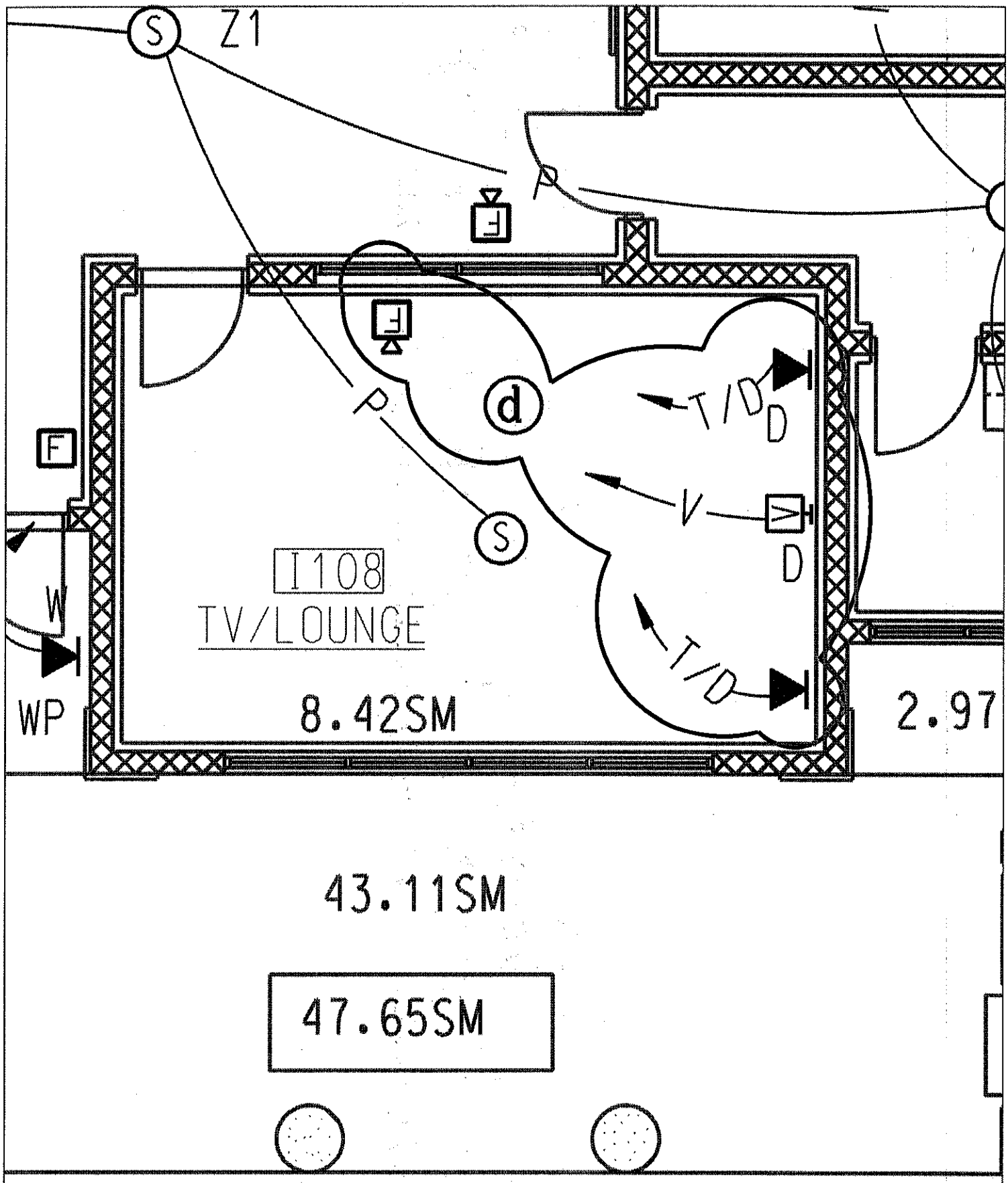

SKETCH 8. DWG NO 721-11-24 SH EI-4. RING 245

...\elec\9-6-02\02wh04e04.dgn 09/09/2002 07:35:35 AM

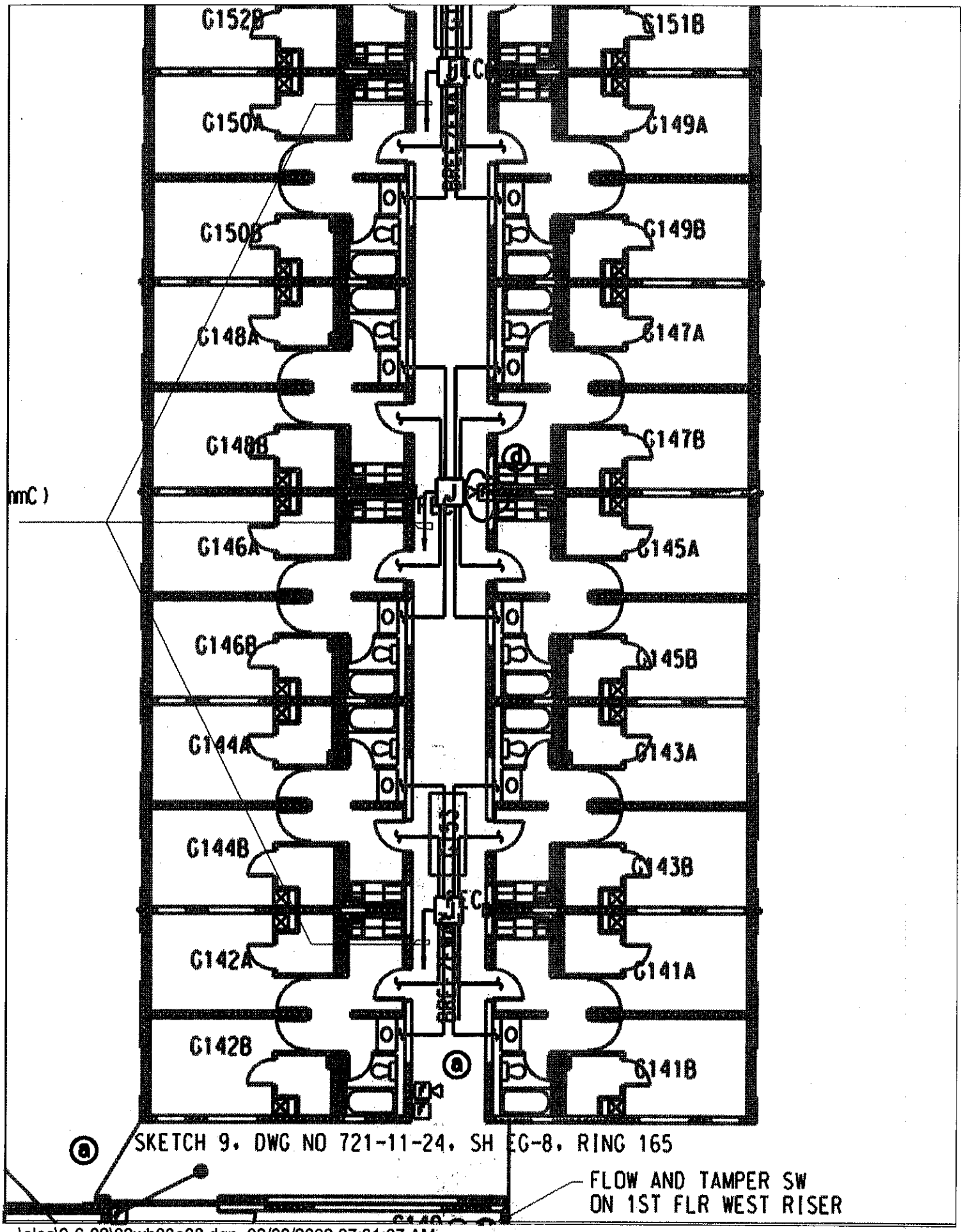

...\elec\9-6-02\02wh03e08.dgn 09/09/2002 07:31:07 AM

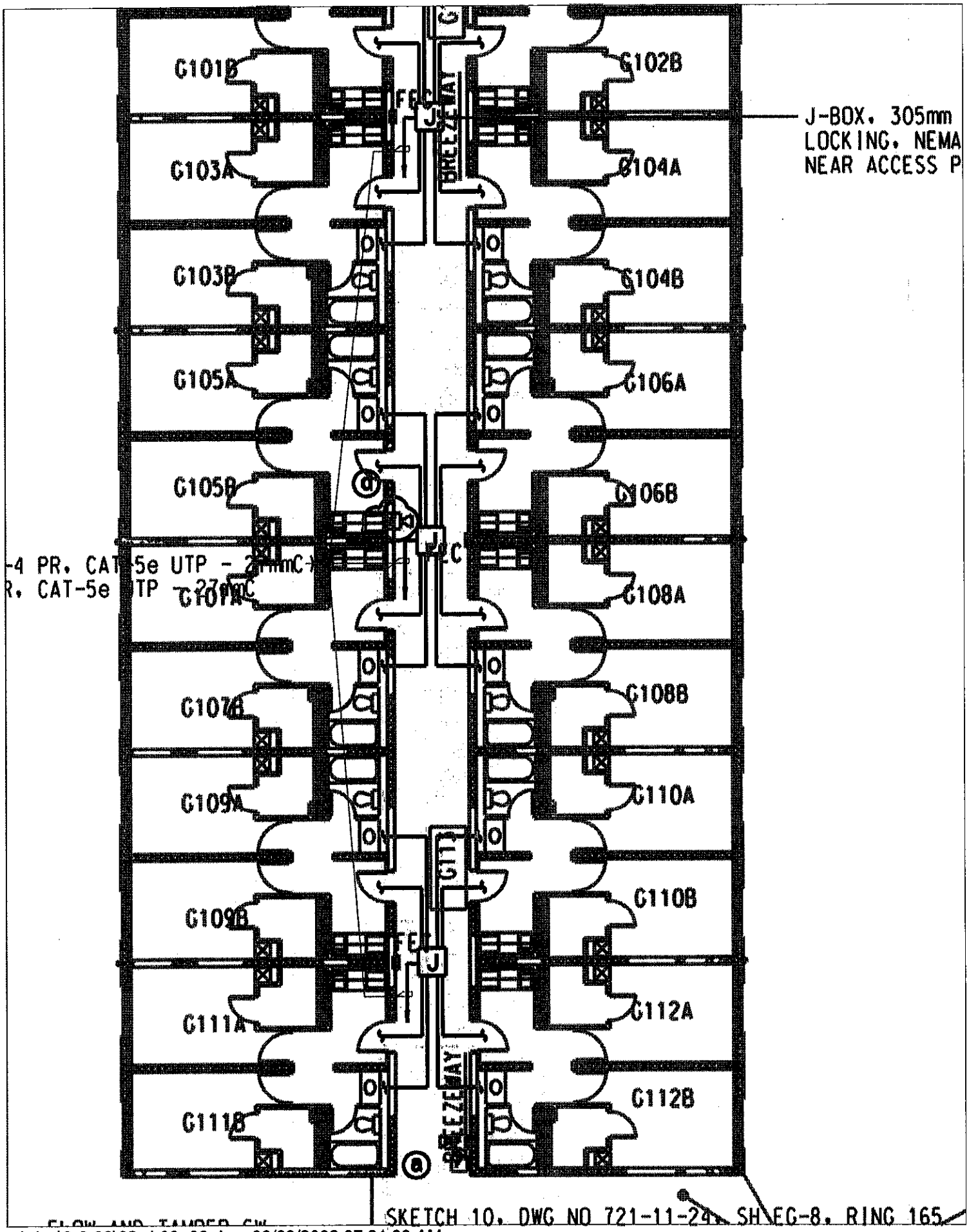

...\elec\9-6-02\02wh03e08.dgn 09/09/2002 07:31:33 AM

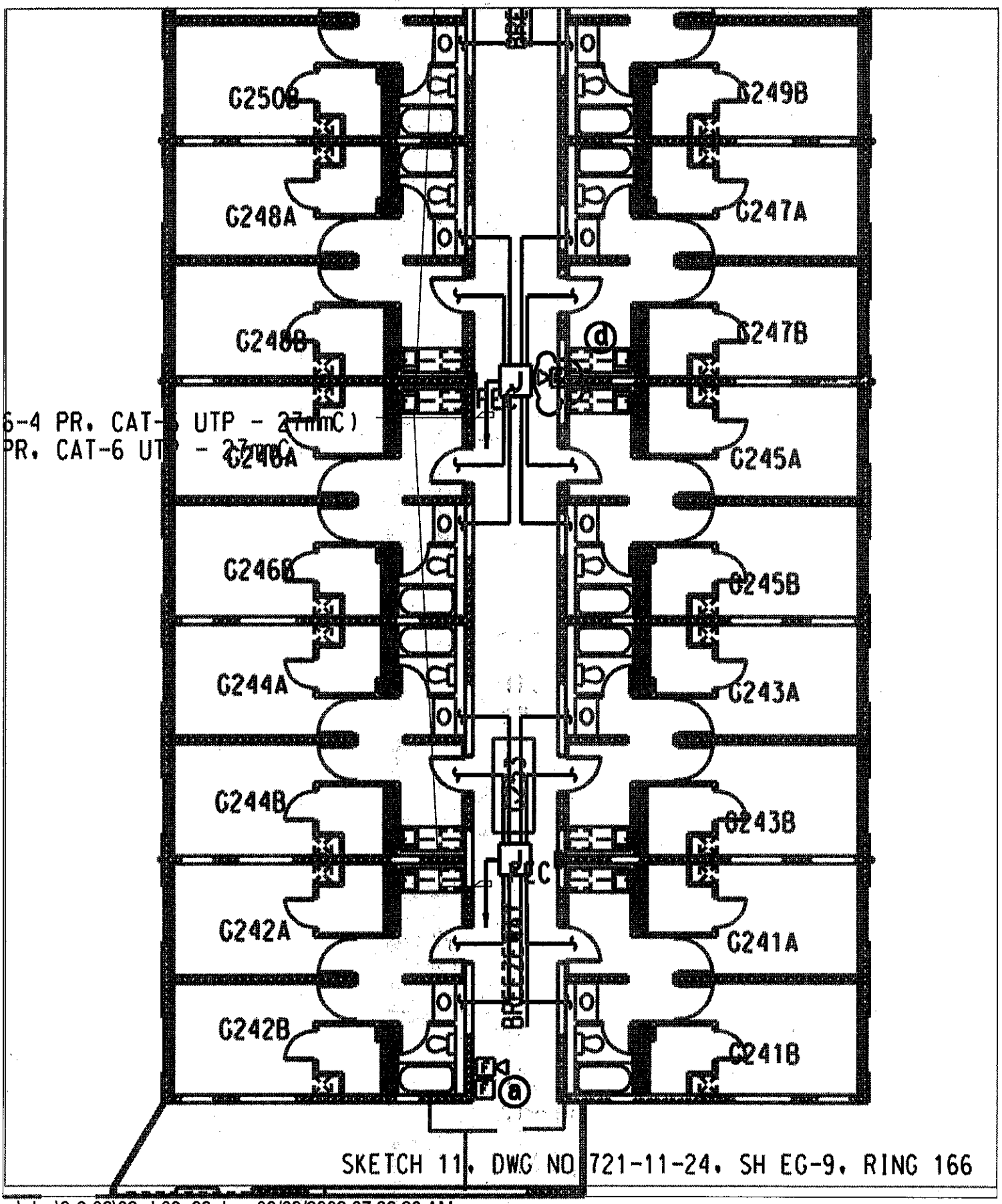

...\elec\9-6-02\02wh03e09.dgn 09/09/2002 07:32:20 AM

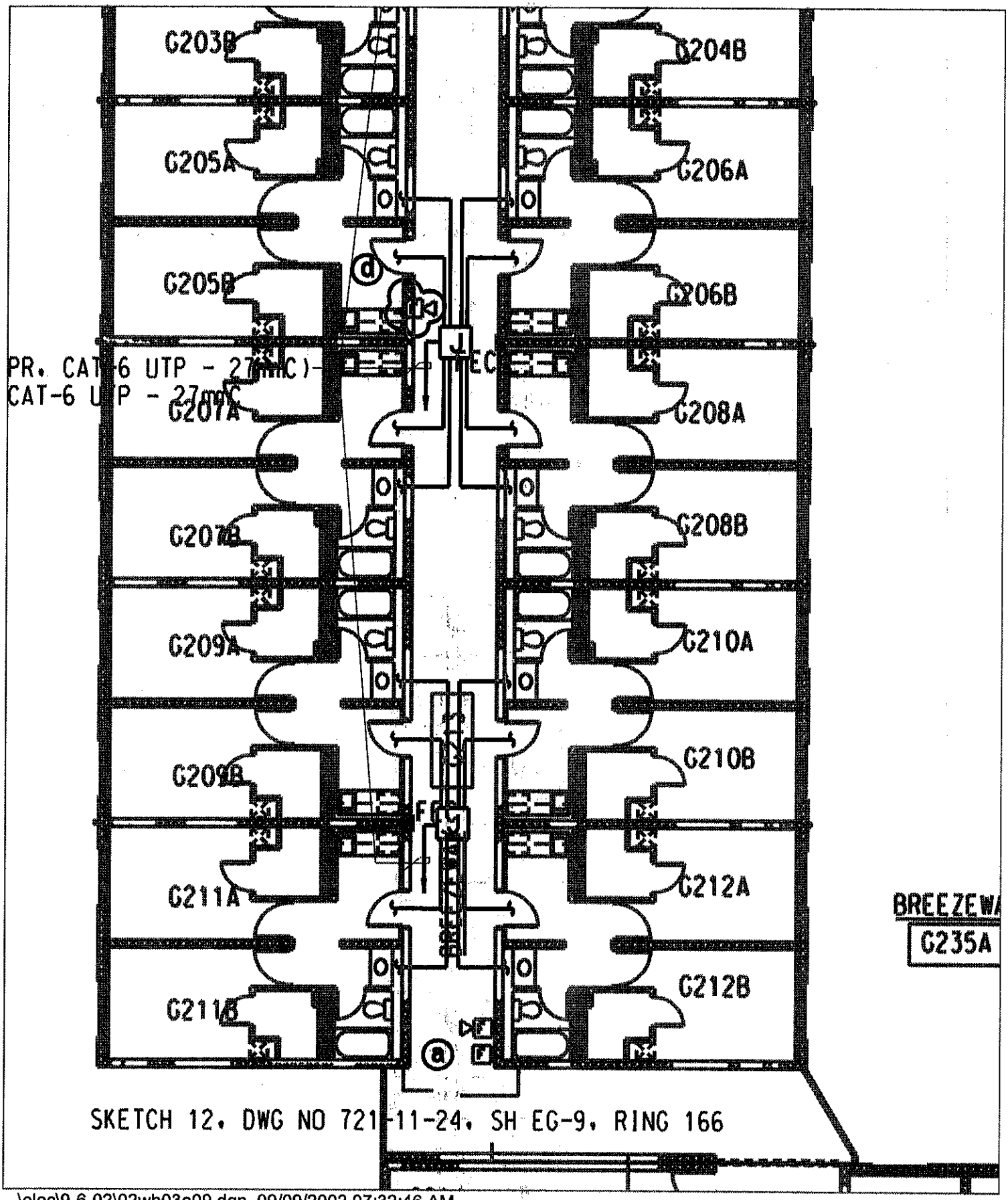

...\elec\9-6-02\02wh03e09.dgn 09/09/2002 07:32:46 AM